May.1.2026 Copyright 2026 HIROSE ELECTRIC CO., LTD. All Rights Reserved.
In case of consideration for using Automotive equipment / device which demand high reliability, kindly contact our sales window correspondents.

ELV. RoHS COMPLIANT

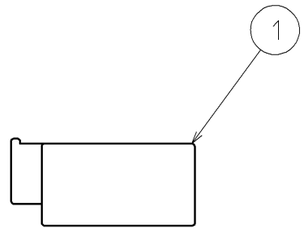

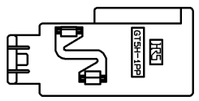

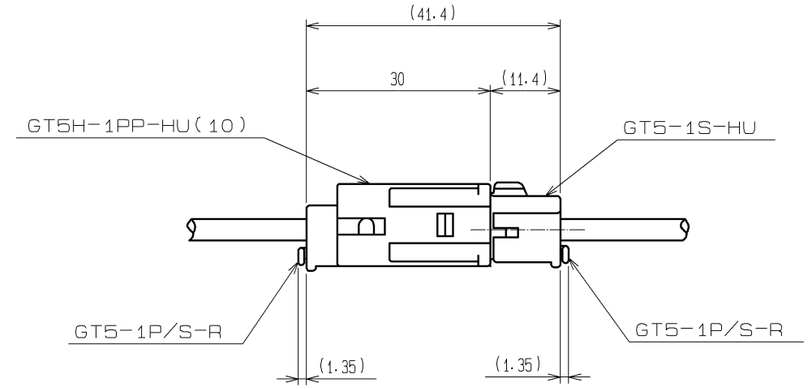

MATED CONNECTORS

HRS DRAWING FOR REFERENCE

NOTE. 1 THIS CONNECTOR SHALL BE USED WITH RETAINER (CL755-0006-2) ASSEMEBLED.

NO.	MATERIAL	FINISH , REMARKS	NO.	MATERIAL	FINISH , REMARKS
1	PBT	UL94HB, LIGHT GRAY			

UNITS	SCALE	COUNT	DESCRIPTION OF REVISIONS	DESIGNED	CHECKED	DATE
mm	1 : 1	△				

HIROSE ELECTRIC CO., LTD.

APPROVED	AR. SHIRAI	11. 11. 01
CHECKED	MO. OKADA	11. 11. 01
DESIGNED	RZ. KANO	11. 11. 01
DRAWN	RZ. KANO	11. 11. 01

DRAWING NO.	EDC3-165680-01
PART NO.	GT5H-1PP-HU(10)
CODE NO.	CL755-0093-7-10 △ 1/1