Jun.1.2026 Copyright 2026 HIROSE ELECTRIC CO., LTD. All Rights Reserved.
In case of consideration for using Automotive equipment / device which demand high reliability, kindly contact our sales window correspondents.

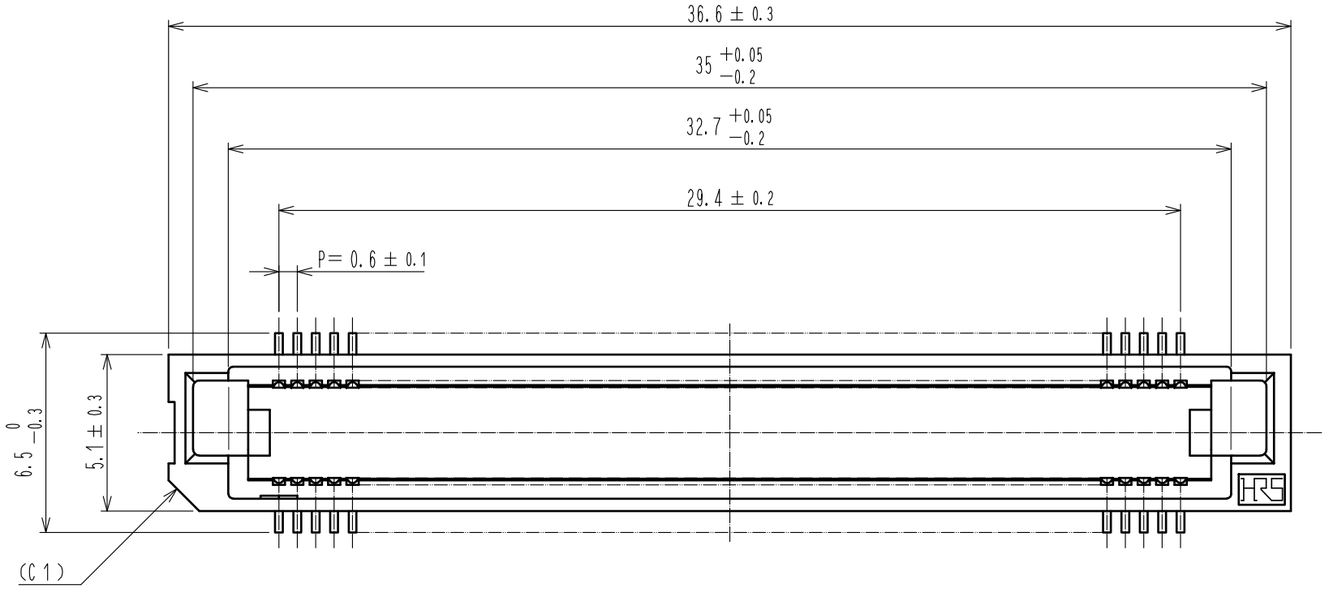

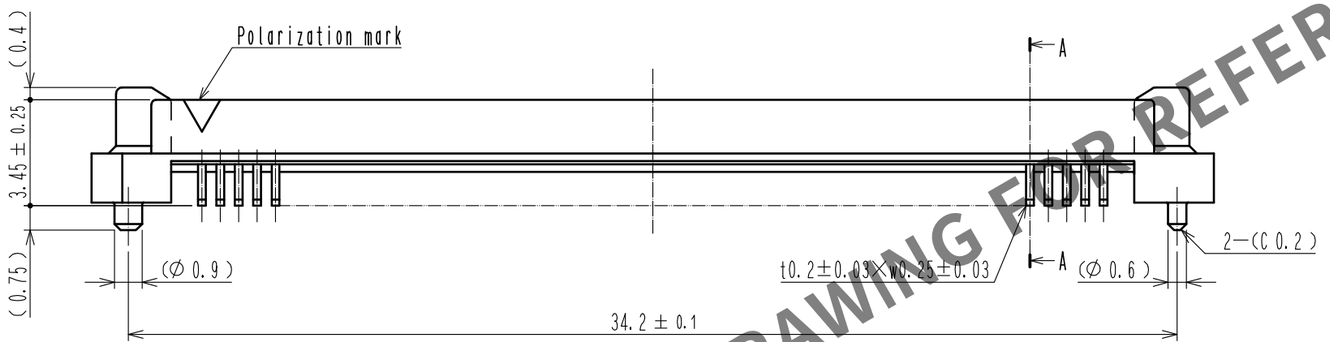

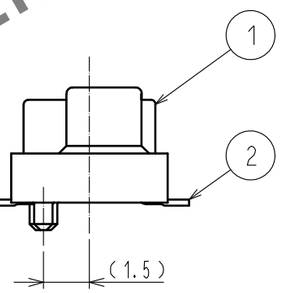

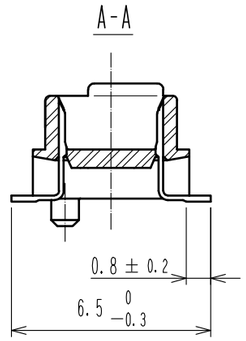

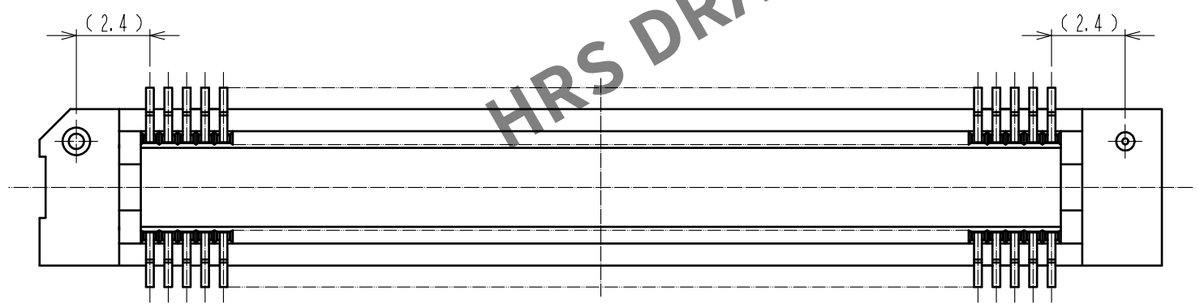

Recommended P.C.B land pattern (mount side) (2:1)

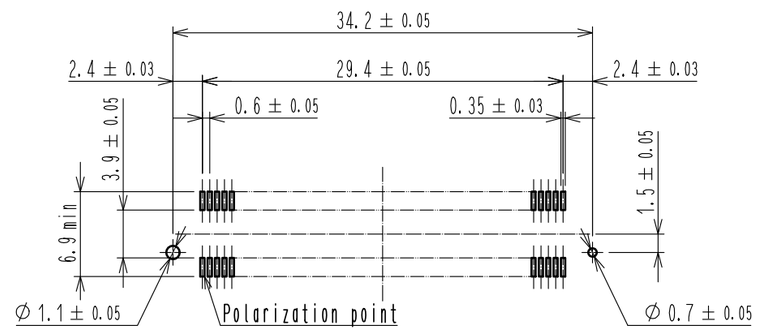

⚠1 Added precaution

Notes 1 Lead CO-PLANARITY shall be 0.1mm max.
2 Tube packaging shall be applied for this product.
See next page for details.
3 For modification, etc., preventive hole for sink mark may be added according to circumstances.
4 The dimensions in parentheses are for reference.

HRS DRAWING FOR REFERENCE

NO.	MATERIAL	FINISH , REMARKS	NO.	MATERIAL	FINISH , REMARKS
2	PHOSPHOR BRONZE	Contact area : Gold 0.1μm min. Lead area : Tin-plating 1μm min. Under plating : Nickel 1μm min.	4	POLYVINYL CHLORIDE	Stopper
1	POLYPHENYLENE SULFIDE	Light brown (UL94V-0)	3	POLYVINYL CHLORIDE	Tube

UNITS	SCALE	⚠	COUNT	DESCRIPTION OF REVISIONS	DESIGNED	CHECKED	DATE
mm	5 : 1	⚠1	1	DIS-F-00006411	KS. NAKAJIMA	HT. YAMAGUCHI	20200803

HIROSE ELECTRIC CO., LTD.

APPROVED	HS. OKAWA	20051011	DRAWING NO. EDC-150571-91-21
CHECKED	HS. OZAWA	20051011	PART NO. FX8-100P-SV1(91)
DESIGNED	TK. YANAGISAWA	20051011	CODE NO. CL578-0045-1-91 ⚠1 1/3
DRAWN	TK. YANAGISAWA	20051011	

Jun.1.2026 Copyright 2026 HIROSE ELECTRIC CO., LTD. All Rights Reserved.
In case of consideration for using Automotive equipment / device which demand high reliability, kindly contact our sales window correspondents.

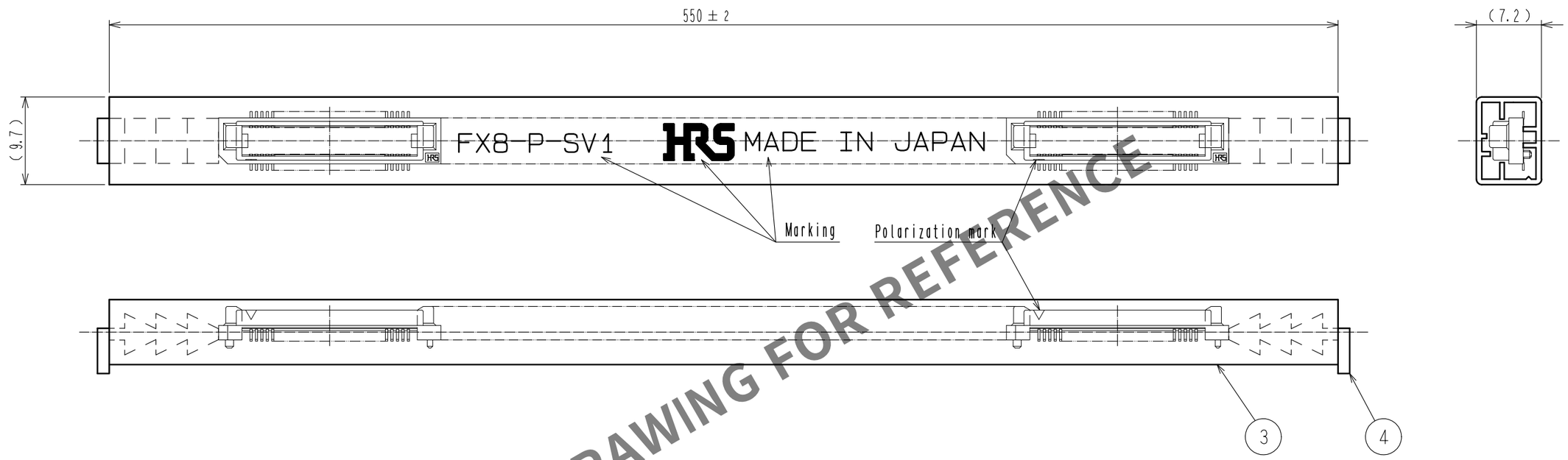

HRS DRAWING FOR REFERENCE

Notes 5 1 tube : 14 connectors.

HRS	DRAWING NO.	EDC-150571-91-21
	PART NO.	FX8-100P-SV1(91)
	CODE NO.	CL578-0045-1-91

【Precaution】

When a board with multiple connectors mounted is mated, the connector may be damaged or deformed.
Please divide one side of the board so only one connector is mated per board.

OK

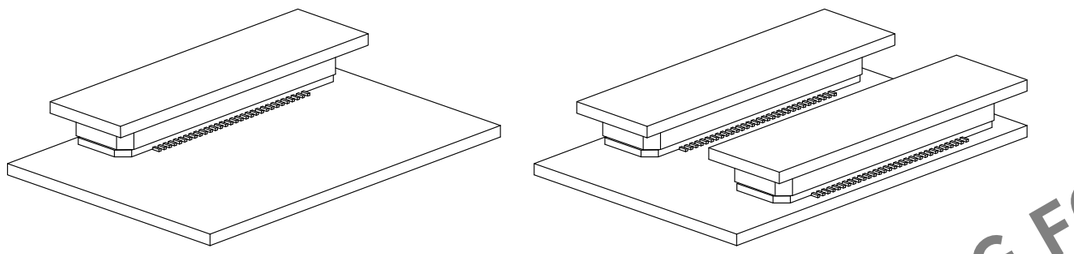

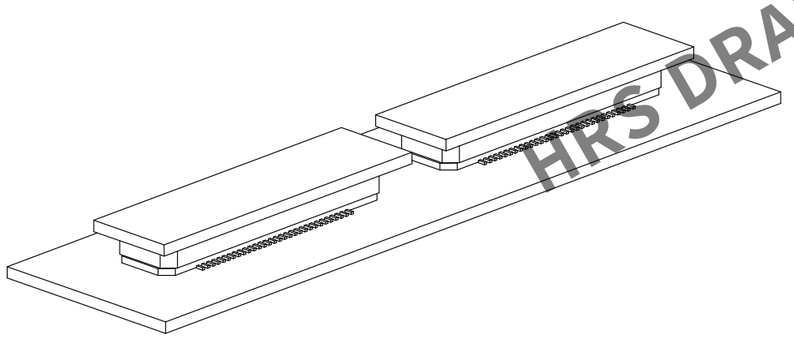

NG

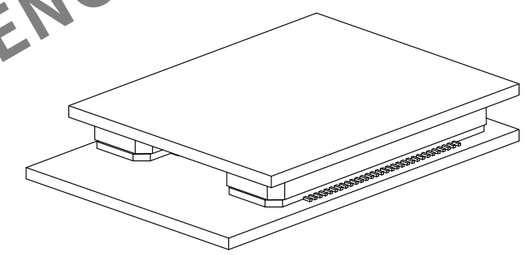

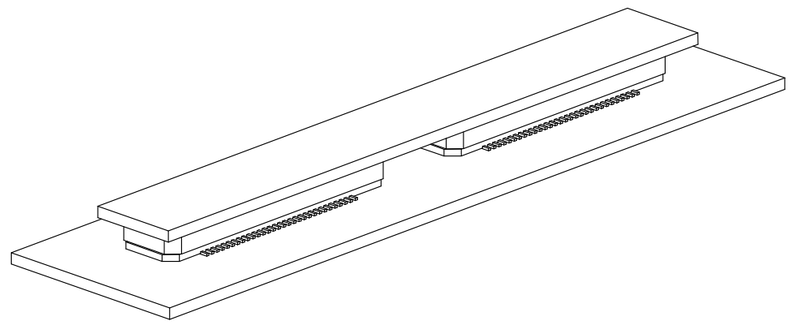

HRS DRAWING FOR REFERENCE

Jun.1.2026 Copyright 2026 HIROSE ELECTRIC CO., LTD. All Rights Reserved.
In case of consideration for using Automotive equipment / device which demand high reliability, kindly contact our sales window correspondents.

DRAWING NO.	EDC-150571-91-21
PART NO.	FX8-100P-SV1(91)
CODE NO.	CL578-0045-1-91

△1 3/3