Jun.1.2026 Copyright 2026 HIROSE ELECTRIC CO., LTD. All Rights Reserved.
In case of consideration for using Automotive equipment / device which demand high reliability, kindly contact our sales window correspondents.

HRS DRAWING FOR REFERENCE

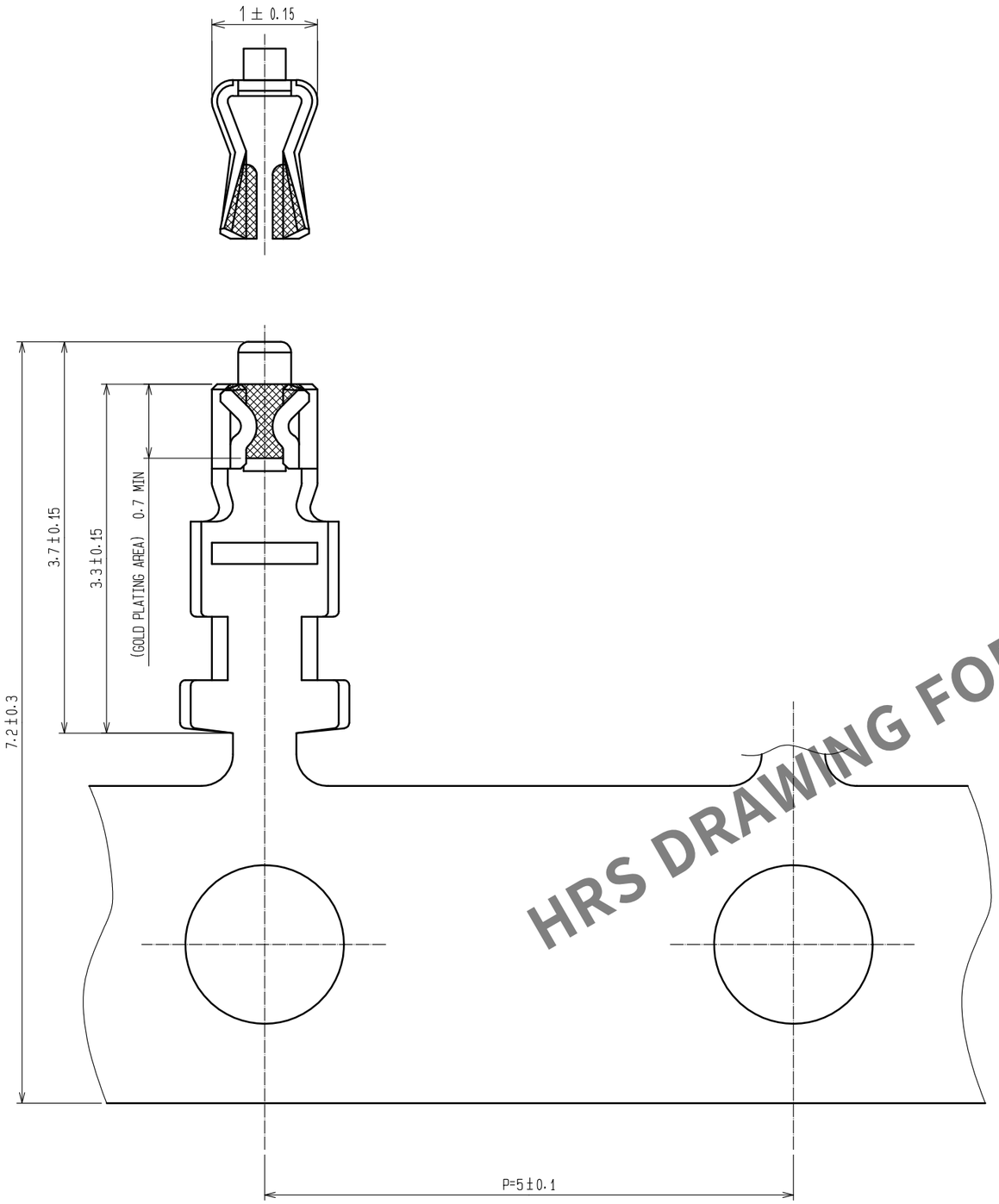

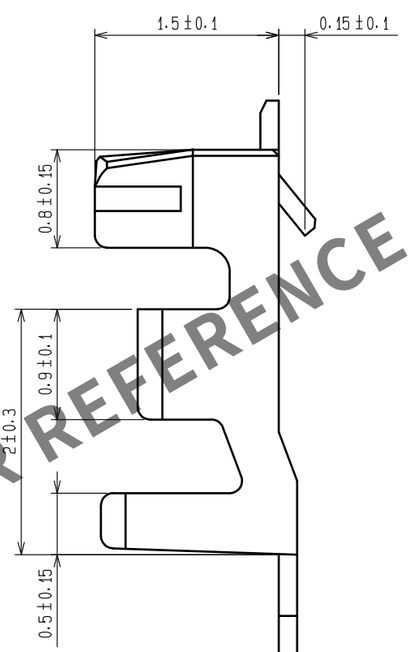

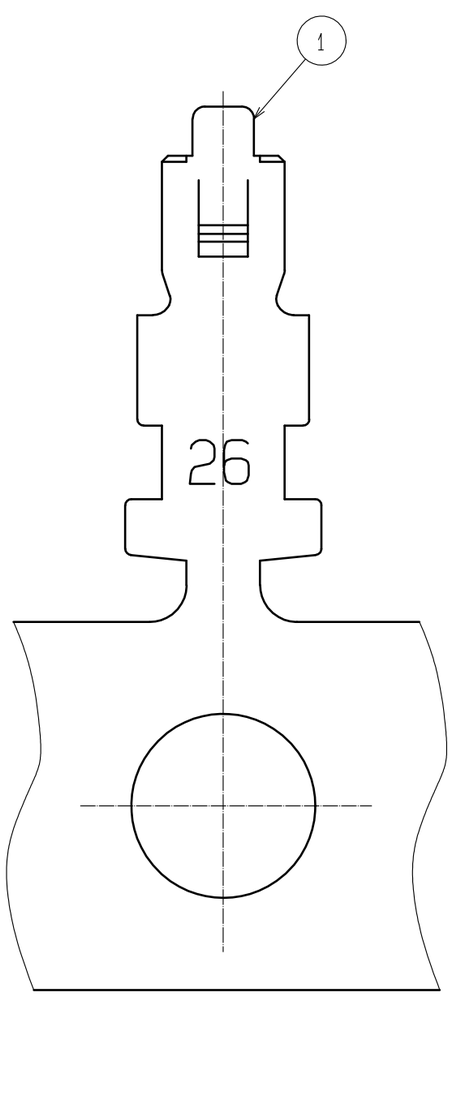

NOTES 1: APPLICABLE WIRE :26 – 30 AWG
△4 OUTER DIAMETER :φ0.56 – φ1.0 mm
2: 1 REEL 10000 CONTACTS

NO.	MATERIAL	FINISH , REMARKS
1	PHOSPHOR BRONZE	CONTACT AREA:GOLD PLATING 0.2μm min OTHERS:NICKEL PLATING 0.5μm min

UNITS	SCALE		COUNT	DESCRIPTION OF REVISIONS	DESIGNED	CHECKED	DATE
mm	20 : 1	△4	1	DIS-H-00004809	HT. SATO	SZ. ONO	20190425

HIROSE ELECTRIC CO., LTD.	APPROVED : KJ. KATAYOSE	20050105	DRAWING NO. EDC-071220-00-00
	CHECKED : TY. OMA	20050105	PART NO. DF13-2630SCFA
	DESIGNED : TS. KUMAZAWA	20050105	
	DRAWN : TS. KUMAZAWA	20050105	CODE NO. CL536-0298-5-00 △4 1/1