Jun.1.2026 Copyright 2026 HIROSE ELECTRIC CO., LTD. All Rights Reserved.
In case of consideration for using Automotive equipment / device which demand high reliability, kindly contact our sales window correspondents.

COUNT	DESCRIPTION OF REVISIONS	BY	CHKD	DATE	COUNT	DESCRIPTION OF REVISIONS	BY	CHKD	DATE
△				. .	△				. .
△				. .	△				. .
△				. .	△				. .

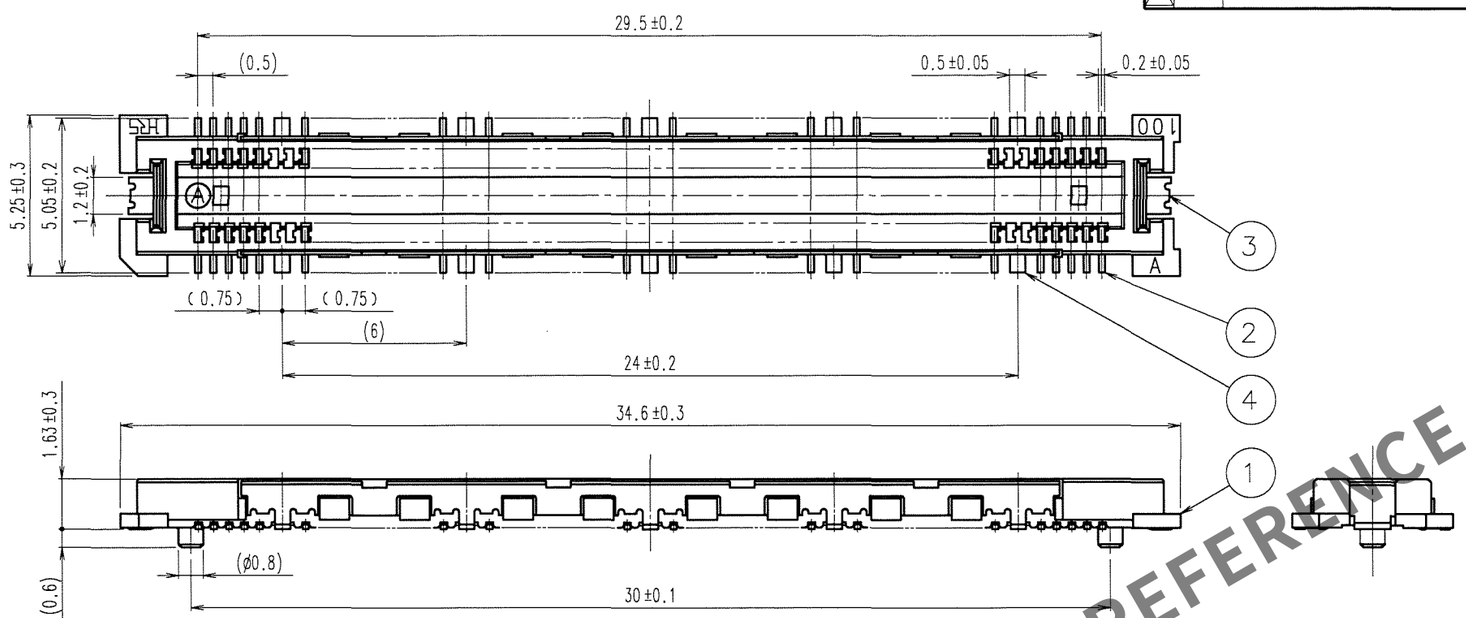

RECOMMENDED LAND PATTERN DIMENSION OF PCB

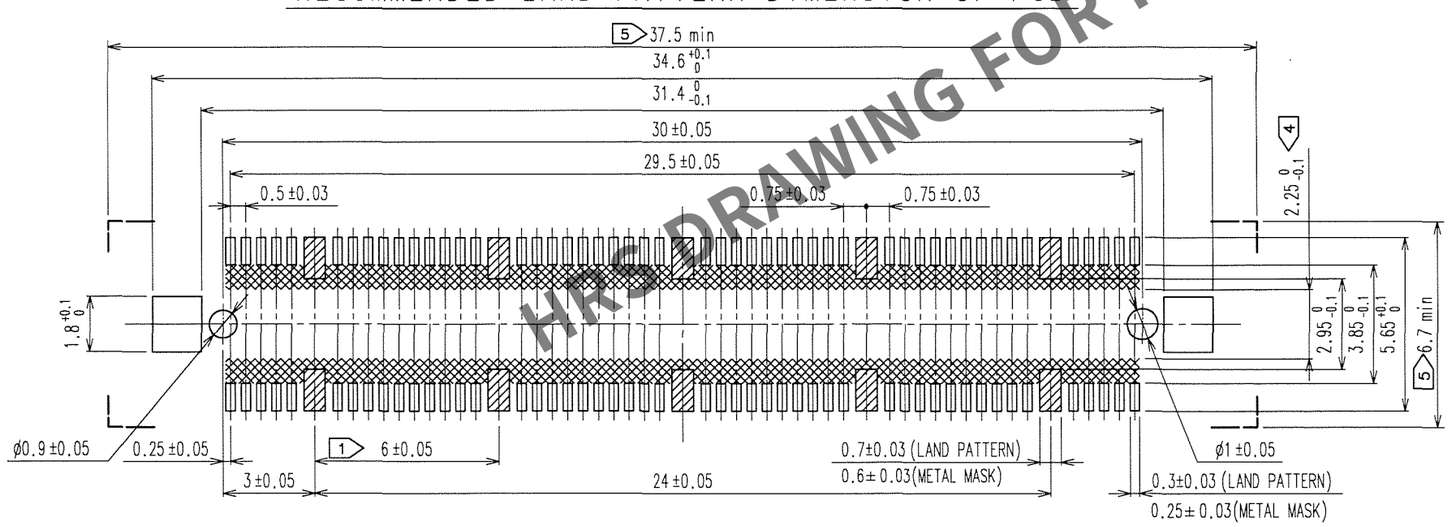

SIGNAL PORTION CROSS SECTION (10 : 1)

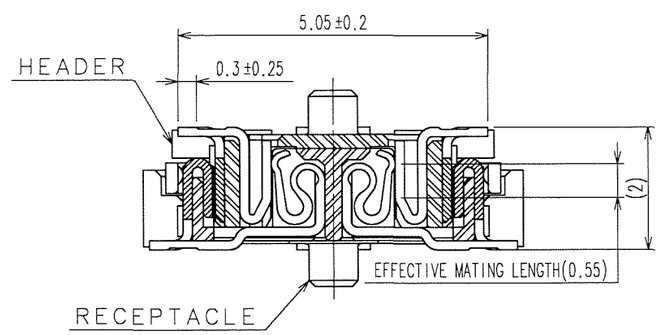

GROUND PORTION CROSS SECTION (10 : 1)

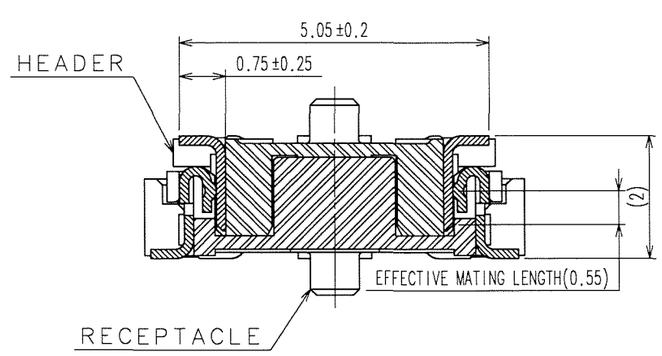

HRS DRAWING FOR REFERENCE

NO.	MATERIAL	FINISH, REMARKS
4	PHOSPHOR BRONZE	TIN PLATING
3	PHOSPHOR BRONZE	TIN PLATING
2	COPPER ALLOY	CONTACT AREA : GOLD 0.1μm min. LEAD AREA : GOLD FLASH UNDER PLATING : NICKEL 1μm min.
1	LCP	BEIGE UL94V-0

NOTES
1. 10 HATCHED ▨ PARTS: GROUND CIRUIT.
2. SMT LEAD-COPLANARITY: 0.1 MAX.
3. THIS PRODUCT HAS NO POLARITY TO PATTERN FOR MOUNTING.
4. MAKE SURE WIDTH OF PATTERN IS WITHIN THAT OF LAND , OR LEAD MAY TOUCH PATTERN. (THIS APPLIES TO HATCHED ▩ AREA.)
5. DO NOT MOUNT OTHER DEVICES ONTO ⊏ ⊐ AREA , OR MATING PAIR CANNOT BE MATED.
6. TO BE EMBOSSED CARRIER TAPED AS SPECIFIED IN SHEET 2.
7. THE DIMENSIONS IN PARENTHESES ARE FOR REFERENCE.

TO
PCK

CODE NO. (OLD): CL

	DRAWN	DESIGNED	CHECKED	APPROVED	RELEASED
	S.KAMIGA 06.09.25	H.Nakamura '06.09.25	H.Ozawa '06.09.26	H.Ekawa '06.09.26	

SCALE 5 : 1
UNITS mm

DRAWING NO. EDC3-152094-22

PART NO. FX11LA-100P/10-SV(92)

HRS HIROSE ELECTRIC CO.,LTD.

CODE NO. CL573-0004-2-92 1/2

FORM NO.229

Jun.1.2026 Copyright 2026 HIROSE ELECTRIC CO., LTD. All Rights Reserved.
In case of consideration for using Automotive equipment / device which demand high reliability, kindly contact our sales window correspondents.

COUNT	DESCRIPTION OF REVISIONS	BY	CHKD	DATE	COUNT	DESCRIPTION OF REVISIONS	BY	CHKD	DATE
△				. .	△				. .
△				. .	△				. .
△				. .	△				. .

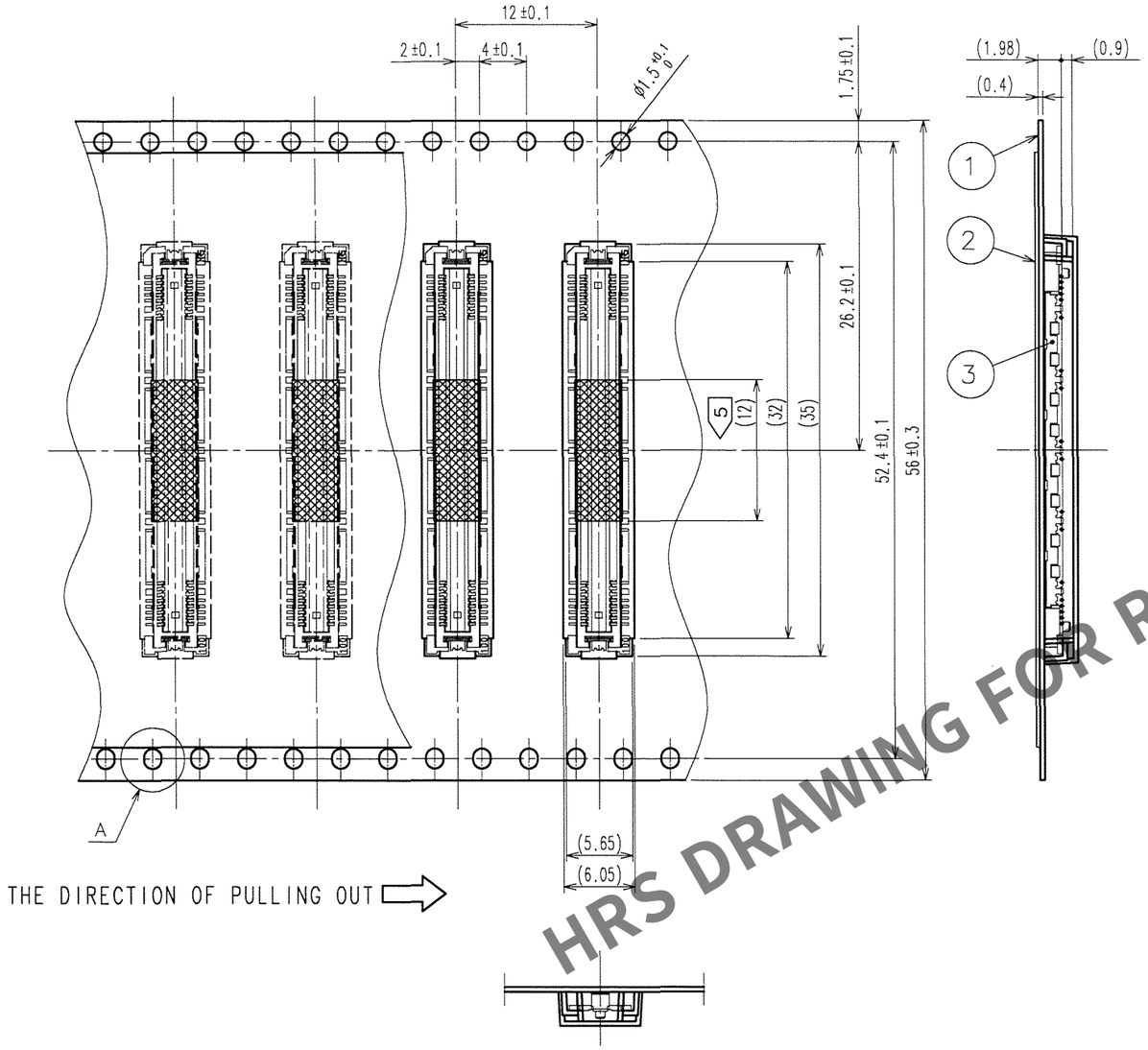

REELED DIMENSION(Free)

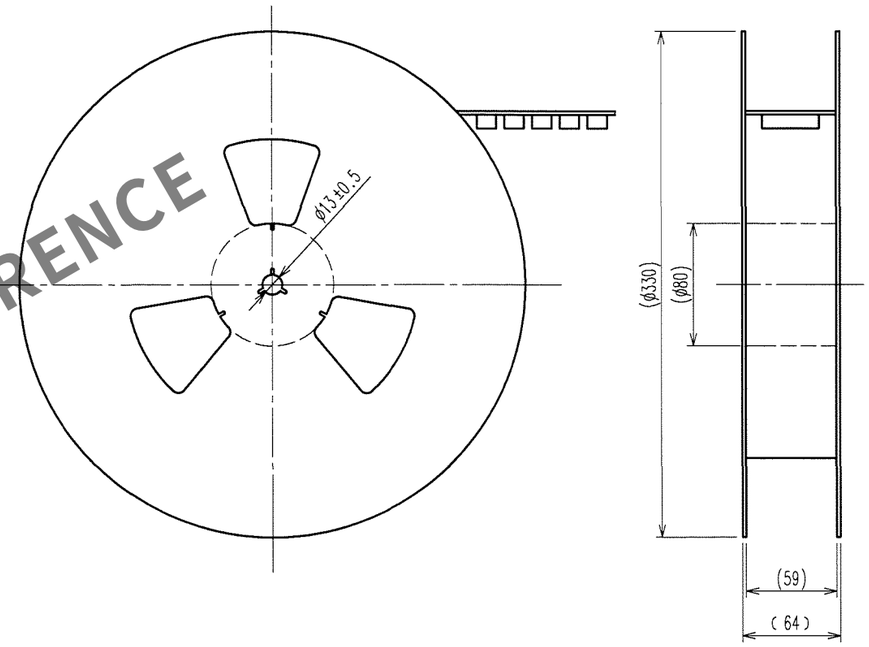

HRS DRAWING FOR REFERENCE

A(5:1)

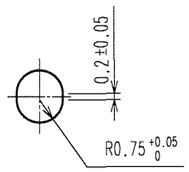

DETAIL FOR VACUUM PICKUP(5:1)

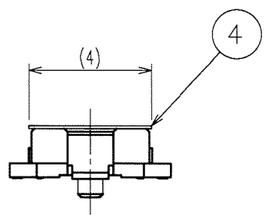

NOTES 1 1REEL:1000 CONNECTORS.
2 MINIMUM 10 COMPARTMENTS FROM BOTH REEL ENDS REMAIN EMPTY.
3 THIS PRODUCT HAS NO POLAVITY TO TAPE AND REEL PACKAGING.
4 THE DIMENSIONS IN PARENTHESES ARE FOR REFERENCE.
5 REMOVE THE VACUUM PICKUP TAPE AFTER MOUNTING THE CONNECTOR.

NO.	MATERIAL	FINISH, REMARKS	NO.	MATERIAL	FINISH, REMARKS
2	PET	(TOP COVER TAPE)	4	POLYIMIDE	(TAPE FOR VACUUM PICKUP)
1	PS	(EMBOSSED CARRIER TAPE)	3		(CONNECTOR)

CODE NO.(OLD)	DRAWN	DESIGNED	CHECKED	APPROVED	RELEASED
CL	S.KAMIGA	H.Nakamura	H.Ogawa	H.Okawa	
	06.09.25	06.09.25	06.09.26	06.09.26	

TO
PCK

SCALE	DRAWING NO.	PART NO.
2 : 1	EDC3-152094-22	FX11LA-100P/10-SV(92)
UNITS mm	HRS HIROSE ELECTRIC CO.,LTD.	CODE NO. CL573-0004-2-92 2/

FORM NO.229