May.1.2026 Copyright 2026 HIROSE ELECTRIC CO., LTD. All Rights Reserved.
In case of consideration for using Automotive equipment / device which demand high reliability, kindly contact our sales window correspondents.

HRS DRAWING FOR REFERENCE

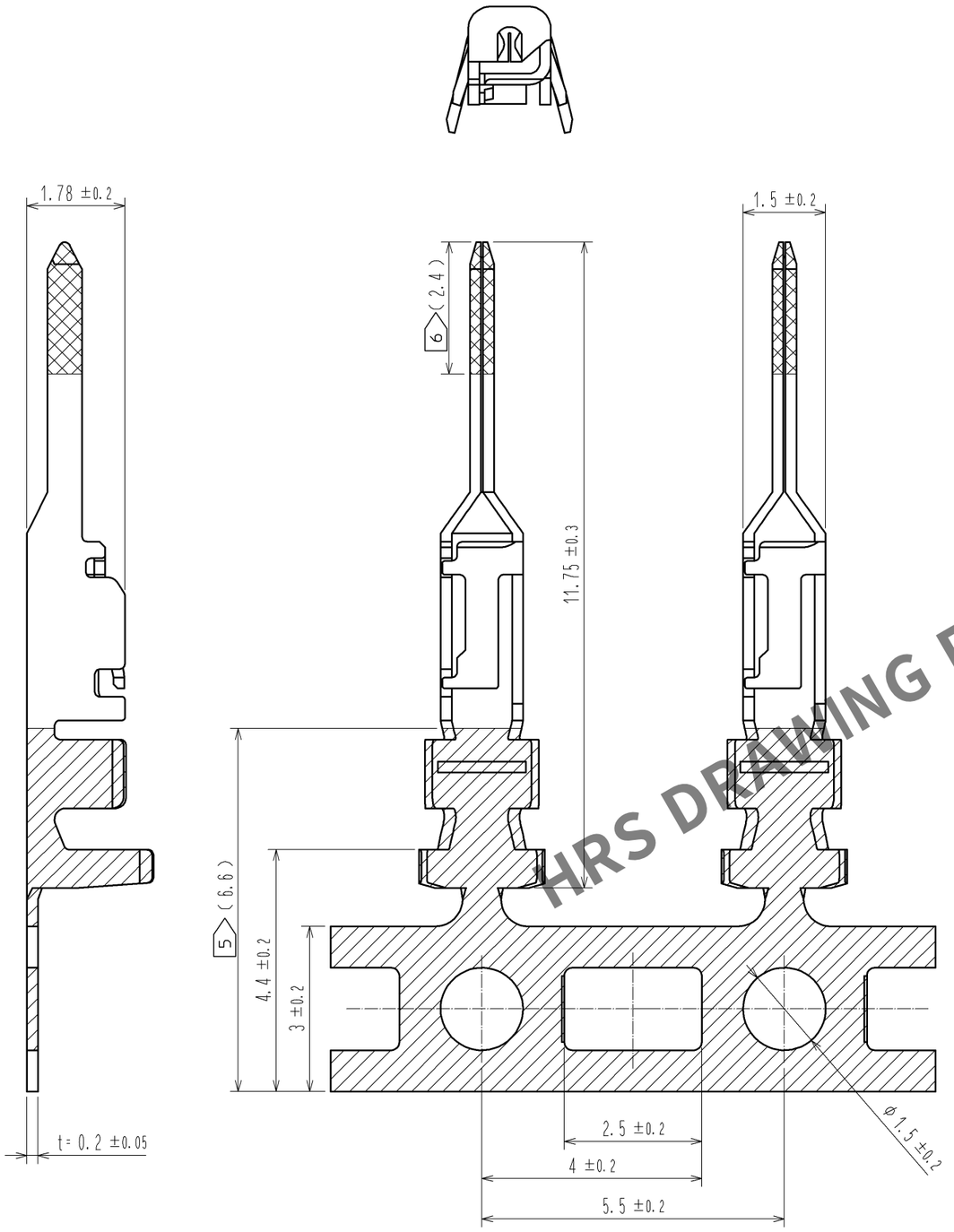

2 STYLE AND DIMENSION OF REEL

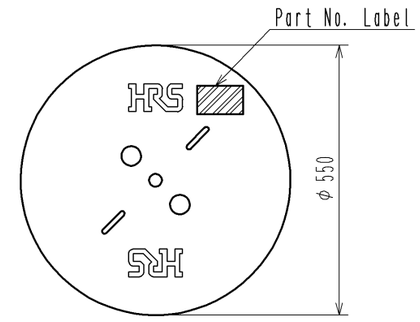

Detail of part No. Label

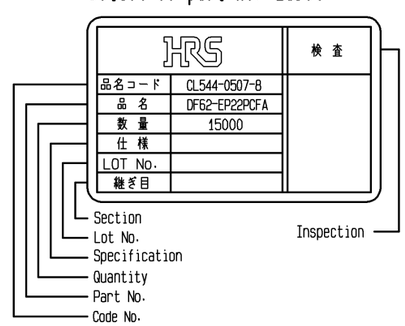

NOTE 1. 1RL:15000 CONTACTS.
2. STYLE OF REEL AND BOX ARE SHOWN IN FIGURE.
3. A MAXIMUM OF 5 REELS ARE PACKED UP IN ONE BOX.
4. PLEASE BE SURE TO CHECK THE FORM OF CRIMPING USING A CABLE. WHEN YOU ADJUST APPLICATOR.
5. TIN PLATING AREA.
6. GOLD PLATING AREA.
7. THE DIMENSIONS IN PARENTHESIS ARE FOR REFERENCE.

NO.	MATERIAL	FINISH , REMARKS
1	PHOSPHOR BRONZE	CONTACT AREA : GOLD PLATING 0.2 μm MIN CARRIER/BARREL AREA : TIN PLATING 1 μm MIN OTHERS : NICKEL PLATING 0.5 μm MIN

UNITS	SCALE	COUNT	DESCRIPTION OF REVISIONS	DESIGNED	CHECKED	DATE
mm	10 : 1					

HIROSE ELECTRIC CO., LTD.

APPROVED	KI. AKIYAMA	12.01.19
CHECED	MN. KENJO	12.01.19
DESIGNED	TO. HORII	12.01.19
DRAWN	TO. HORII	12.01.19

DRAWING NO.	EDC3-339877-00
PART NO.	DF62-EP22PCFA
CODE NO.	CL544-0507-8-00

1/1