Jun.1.2026 Copyright 2026 HIROSE ELECTRIC CO., LTD. All Rights Reserved.
In case of consideration for using Automotive equipment / device which demand high reliability, kindly contact our sales window correspondents.

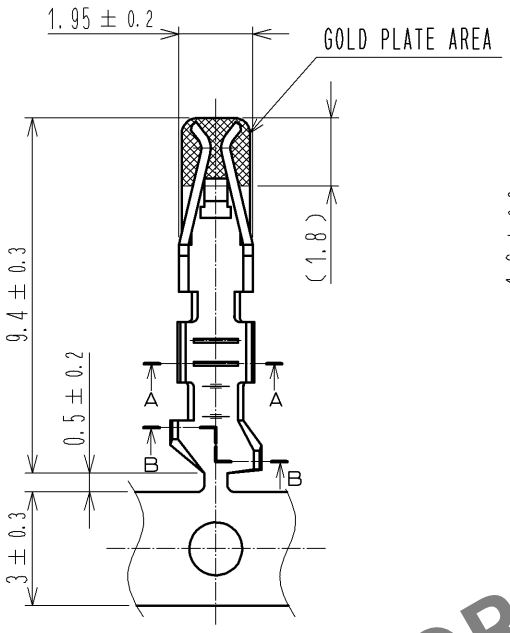

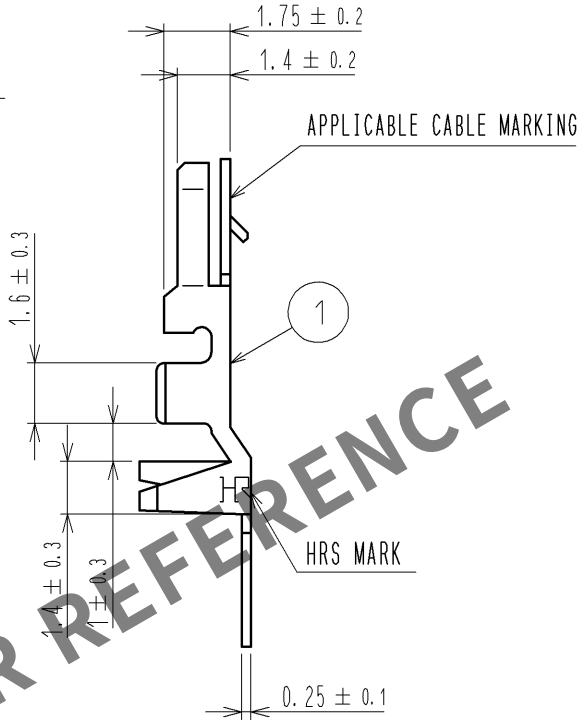

HRS DRAWING FOR REFERENCE

A-A

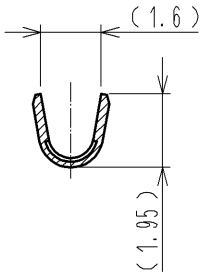

B-B

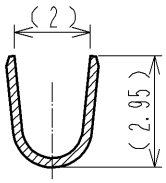

NOTE 1 : 1 REEL 10000 CONTACTS
2 : APPLICABLE CABLE : AWG20-22

NO.	MATERIAL	FINISH , REMARKS
1	PHOSPHOR BRONZE	CONTACT AREA: GOLD PLATING 0.2μm OTHER AREA : NICKEL PLATING 0.5μm

UNITS mm	SCALE 5 : 1	COUNT	DESCRIPTION OF REVISIONS	DESIGNED	CHECKED	DATE
	△					

HIROSE ELECTRIC CO., LTD.

APPROVED	KI. AKIYAMA	12.10.11
CHECKED	HK. UMEHARA	12.10.11
DESIGNED	HT. SATO	12.10.11
DRAWN	MI. SAKIMURA	12.10.10

DRAWING NO.	EDC4-162826-01
PART NO.	DF1E-2022SCFA
CODE NO.	CL541-1001-5-00 △ 1/1

FORM HC0011-5-51