Jun.1.2026 Copyright 2026 HIROSE ELECTRIC CO., LTD. All Rights Reserved.
In case of consideration for using Automotive equipment / device which demand high reliability, kindly contact our sales window correspondents.

HRS DRAWING FOR REFERENCE

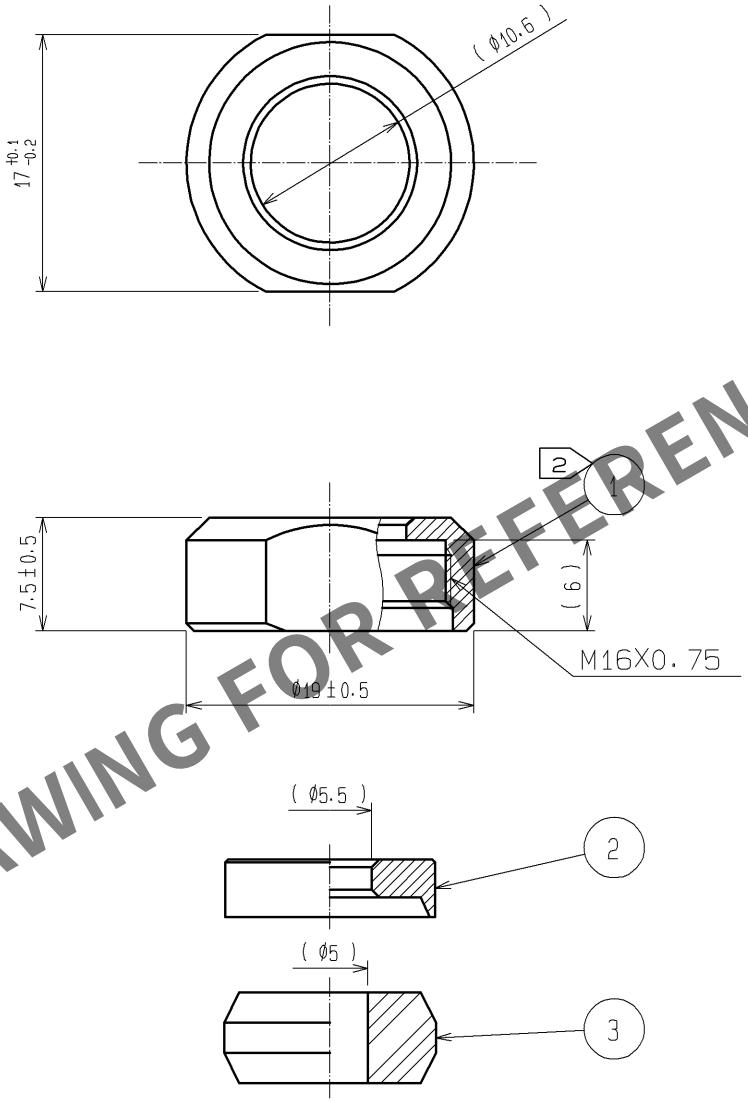

NOTES 1 THIS PRODUCT IS DELIVERED DISASSEMBLED.
2 THE RECOMMENDED CLAMP TORQUE OF REF.NO.① TO BE 2 TO 2.5 N・m.
LOCTITE 271, HENKEL JAPAN OR EQUIVALENT IS RECOMMENDED TO PREVEVT
REF.NO.① FROM LOOSENING.

NO.	MATERIAL	FINISH , REMARKS	NO.	MATERIAL	FINISH , REMARKS
2	BRASS	NICKEL PLATING			
1	BRASS	CROME PLATING	3	SILICONE RUBBER	(BLACK)

UNITS mm	SCALE 2 : 1	COUNT	DESCRIPTION OF REVISIONS	DESIGNED	CHECKED	DATE

HIROSE ELECTRIC CO., LTD.

APPROVED	SU. OBARA	10. 06. 23	DRAWING NO.	EDC4-110619-72
CHECKED	HY. KISHI	10. 06. 23	PART NO.	JR13WCCA-5(72)
DESIGNED	TH. KAMEYA	10. 06. 23	CODE NO.	CL114-2070-8-72 △ 1/1
DRAWN	YS. SAKODA	10. 06. 22		

FORM HC0011-5-51