Jun.1.2026 Copyright 2026 HIROSE ELECTRIC CO., LTD. All Rights Reserved.
In case of consideration for using Automotive equipment / device which demand high reliability, kindly contact our sales window correspondents.

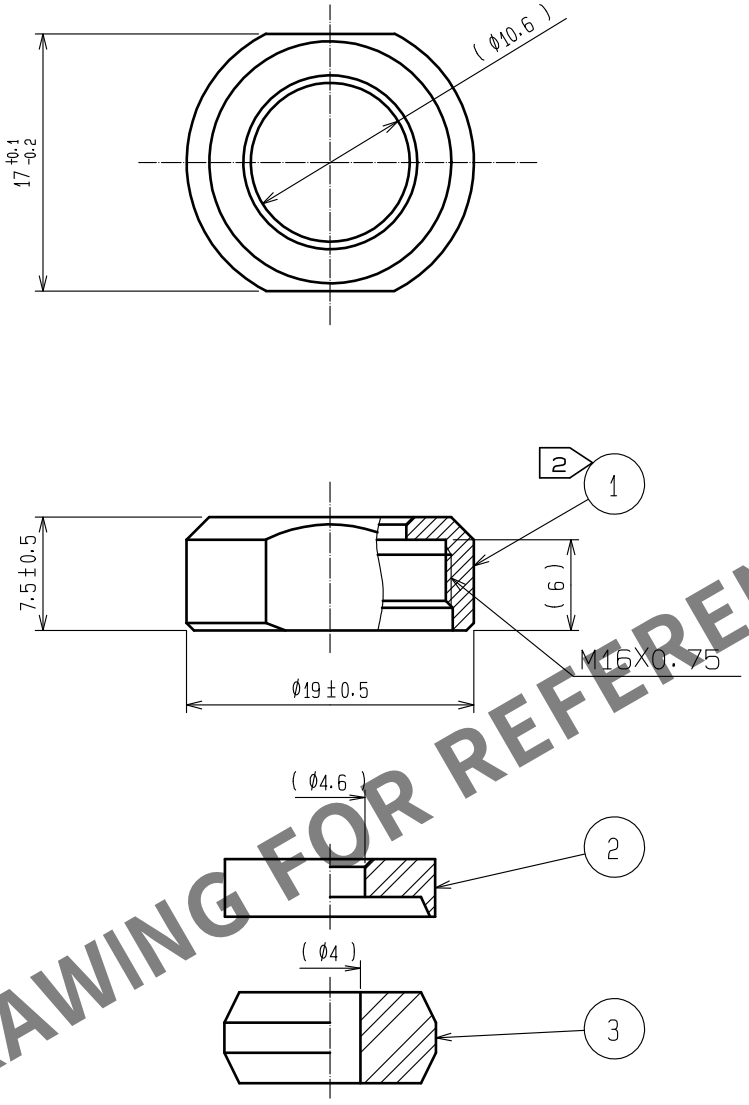

HRS DRAWING FOR REFERENCE

NOTES 1 THIS PRODUCT IS DELIVERED DISASSEMBLED.

2 THE RECOMMENDED CLAMP TORQUE OF REF. NO. ① TO BE 2 TO 2.5N・m
LOCTITE 263, HENKEL JAPAN OR EQUIVALENT IS RECOMMENDED TO PREVENT
REF. NO. ① FROM LOOSENING.

NO.	MATERIAL	FINISH . REMARKS	NO.	MATERIAL	FINISH . REMARKS
2	POLYPHENYLENE SULFIDE	(BLACK) UL94V-0			
1	BRASS	BLACK CHROME PLATING	3	ACRYLONITRILE BUTADIENE RUBBER	(GRAY)

UNITS	SCALE		COUNT	DESCRIPTION OF REVISIONS	DESIGNED	CHECKED	DATE
mm	2 : 1	△0					

HIROSE ELECTRIC CO., LTD.

APPROVED	HY. KOBAYASHI	18. 02. 26
CHECKED	HY. KOBAYASHI	18. 02. 26
DESIGNED	TH. KAMEYA	18. 02. 23
DRAWN	MK. INOUE	18. 02. 14

DRAWING NO.	EDC-110618-31-00
PART NO.	JR13WCCA-4(31)
CODE NO.	CL114-2069-9-31 △0 1/1

FORM HC0011-5-51