Jun.1.2026 Copyright 2026 HIROSE ELECTRIC CO., LTD. All Rights Reserved.
In case of consideration for using Automotive equipment / device which demand high reliability, kindly contact our sales window correspondents.

	COUNT	DESCRIPTION OF REVISIONS	BY	CHKD	DATE		COUNT	DESCRIPTION OF REVISIONS	BY	CHKD	DATE
△					. .	△					. .
△					. .	△					. .
△					. .	△					. .

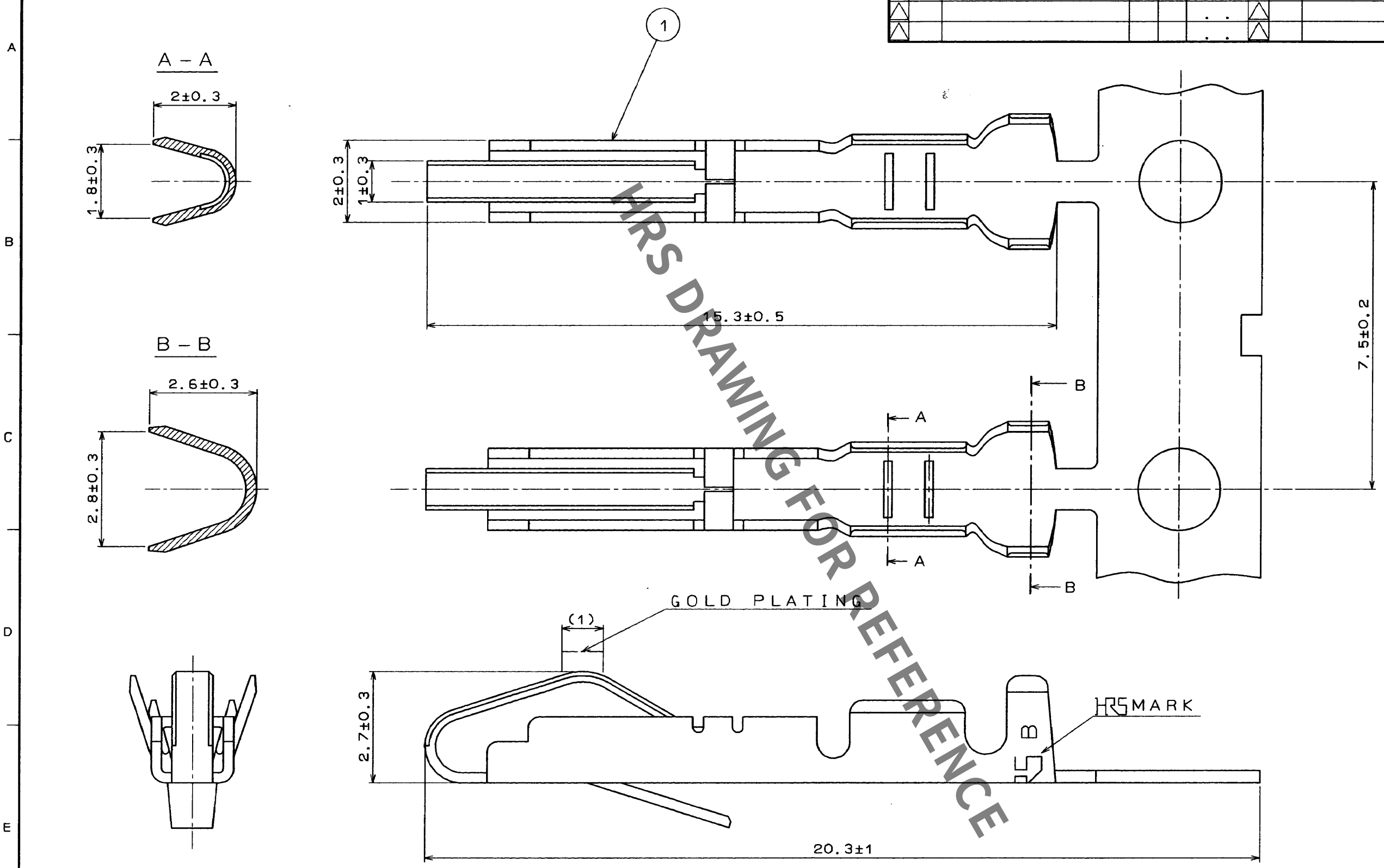

HRS DRAWING FOR REFERENCE

NOTE 1 THIS CONTACT IS APPLICABLE TO THE WIRES, 20 TO 24 AWG AND CAN NOT USED TO QR/P6SERIES CONNECTOR.

NO.	MATERIAL	FINISH , REMARKS	NO.	MATERIAL	FINISH , REMARKS
1	PHOSPHOR BRONZE	UNDER NICKEL PLATED + SELECTIVE GOLD PLATED 0.2			

CODE NO. (OLD)	DRAWN	DESIGNED	CHECKED	APPROVED	RELEASED
	K. Awabachi '94. 6. 30	T. Kameya 94. 7. 1	H. Miura 94. 7. 1	A. Nakagawa 94. 7. 1	

SCALE 10 : 1	DRAWING NO. EDC3-020663-02	PART NO. QR/P1-SC2B-221(12)
UNITS mm	HRS HIROSE ELECTRIC CO., LTD.	CODE NO. CL221-0121-2-12 1/1

FORM No. 229

TO
Q2