Jun.1.2026 Copyright 2026 HIROSE ELECTRIC CO., LTD. All Rights Reserved.
In case of consideration for using Automotive equipment / device which demand high reliability, kindly contact our sales window correspondents.

	COUNT	DESCRIPTION OF REVISIONS	BY	CHKD	DATE		COUNT	DESCRIPTION OF REVISIONS	BY	CHKD	DATE
△					. .	△					. .
△						△					. .
△						△					. .

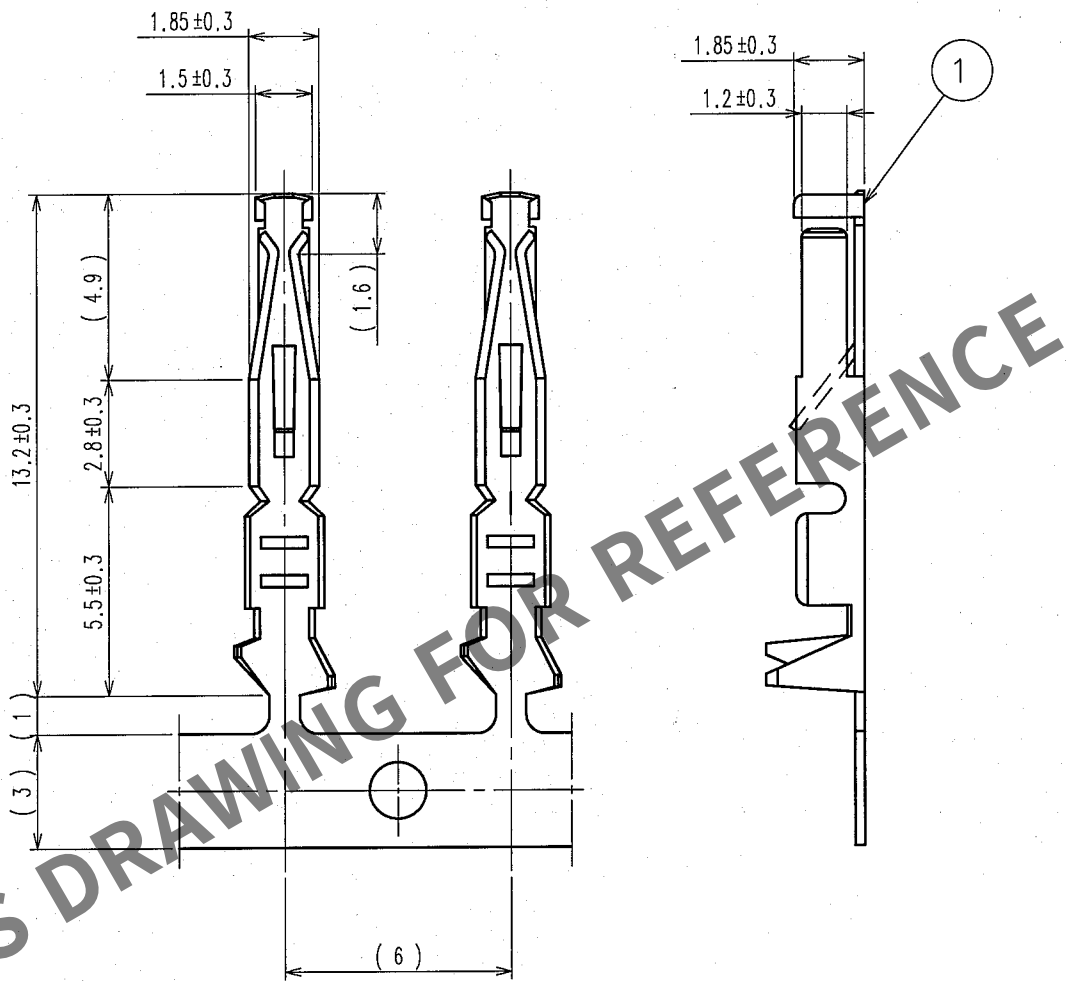

HRS DRAWING FOR REFERENCE

NOTE BASE METAL IS EXPOSED AT CONTACT CUT SECTION.

NO.	MATERIAL	FINISH, REMARKS
1	PHOSPHOR BRONZE	CONTACT AREA: Ni1μm+Au0.2μm
		OTHERS:Ni1μm

CODE NO.(OLD)	DRAWN	DESIGNED	CHECKED	APPROVED	RELEASED
CL	H.Saitou 07.02.05	H.Saitou 07.02.05	S.Tomioka 07.02.06	K.Akiyama 07.02.07	

TO

SCALE 10 : 1
UNITS mm

DRAWING NO. EDC4-019767-01

PART NO. PCN10-2226SCF

HIROSE ELECTRIC CO.,LTD.

CODE NO. CL583-0268-1

1/1

FORM NO.228