0.4mm,0.5mm,1mm Pitch, 1.2mm above the board, Flexible Printed Circuit & Flexible Flat Cable ZIF Connectors

FH33 Series

Increased FPC retention force

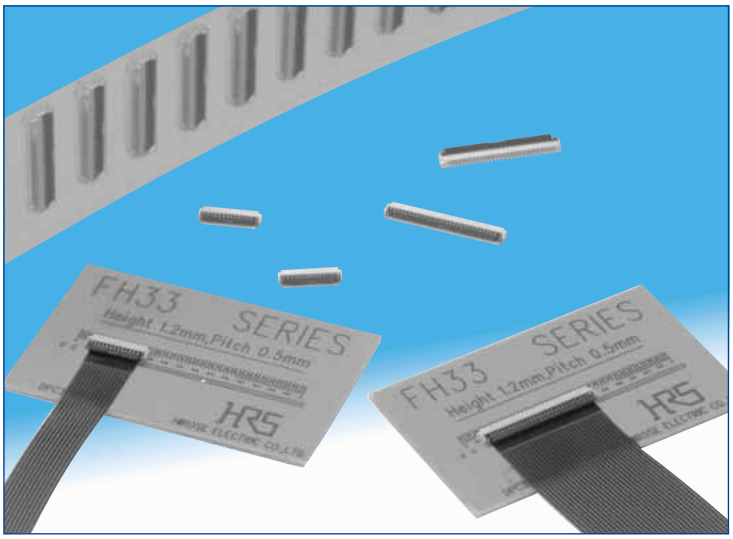

●Small size

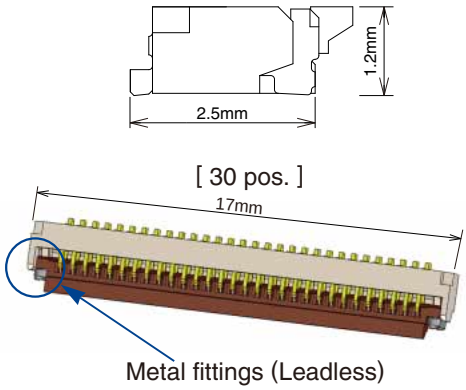

●Can be mounted over conductive traces.

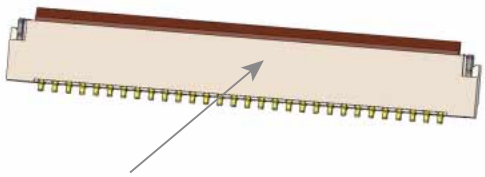

No exposed contacts on the bottom of the connector

●Simple operation

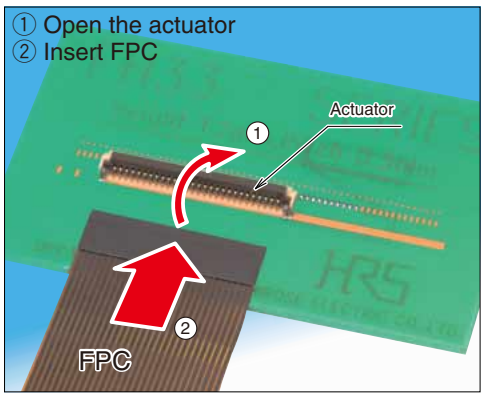

●Locked condition

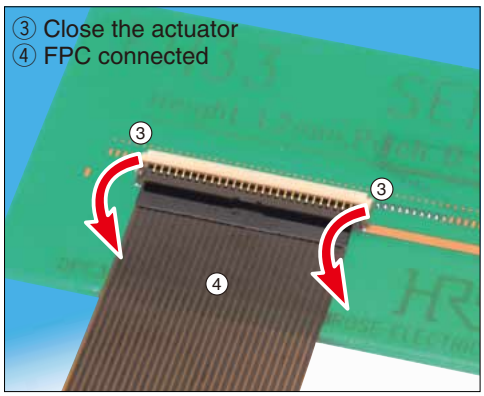

Features

1. Low-profile, small PCB mounting area

Narrow width of only 2.5 mm reduced the board footprint by approximately 17% to 57%, as compared to several similar FH Series HRS connectors.

2. Various contact pitch (0.4mm, 0.5mm, 1mm pitch) available

In addition to standard 0.5mm pitch, 0.4mm pitch, 1mm pitch also available.

3. Increased FPC/FFC retention force

- In the horizontal direction: Approximately 2.0 times (compared to 0.5mm pitch FH12 series.)
- In the vertical direction: Approximately 1.7 times (compared to 0.5mm pitch FH19 series.)

4. Conductive traces on the PCB can run under the connector

No exposed contacts on the bottom of the connector.

5. One finger operation of the actuator

Proven (in several other Hirose's connectors) Flip-Lock® rotating actuator assures reliable mechanical and electrical connection with FPC/FFC, confirming it with a definite tactile feel.

6. Easy FPC insertion and reliable electrical connection

Proven Flip Lock actuator allows easy insertion of FPC/FFC and provides a tactile sensation when fully closed, confirming complete electrical and mechanical connection.

7. Accepts standard FPC thickness

0.3mm thick standard Flexible Printed Circuit (FPC) and Flexible Flat Cable (FFC) can be used.

8. Board placement with automatic equipment

Flat upper surface and tape and reel packaging facilitate vacuum pick-up and placement.
Standard reel packaging contains 5000 connectors.

9. Halogen-free* (FH33J Series)

*As defined by IEC61249-2-21
Br-900ppm maximum, Cl-900ppm maximum,
Cl + Br combined-1,500ppm maximum

Mar.1.2026 Copyright 2026 HIROSE ELECTRIC CO., LTD. All Rights Reserved.

■Product Specifications

Ratings	Current rating 0.5 A (0.4mm pitch type 0.4A) Voltage rating 50 V AC (0.4mm pitch type 40V AC)	Operating temperature range -55 ℃ to +85℃ (Note 1) Operating humidity range Relative humidity 90% max. (No condensation)	Storage temperature range -10℃ to +50℃ (Note 2) Storage humidity range Relative humidity 90% max. (No condensation)

Recommended FPC	Thickness = 0.3 ± 0.05mm gold plated (under 30 pos.), 0.3 ± 0.03mm gold plated (over 31 pos.)

Item	Specification	Conditions
1. Insulation resistance	500 MΩ min.	100 V DC
2. Withstanding voltage	No flashover or insulation breakdown.	150 V AC /one minute, 120 V AC /one minute(0.4mm pitch type)
3. Contact resistance	50 mΩ max. 100 mΩ max(0.4mm pitch type). ✻ Including FPC conductor resistance	1 mA
4. Durability (insertion/ withdrawal)	Contact resistance: 50 mΩ max. 100 mΩ max(0.4mm pitch type). No damage, cracks, or parts dislocation.	20 cycles
5. Vibration	No electrical discontinuity of 1μs or more. Contact resistance: 50 mΩ max. 100 mΩ max(0.4mm pitch type). No damage, cracks, or parts dislocation.	Frequency: 10 to 55 Hz, single amplitude of 0.75 mm, 10 cycles in each of the 3 directions.
6. Shock		Acceleration of 981 m/s², 6 ms duration, sine half-wave waveform, 3 cycles in each of the 3 axis
7. Humidity (Steady state)	Contact resistance: 50 mΩ max. 100 mΩ max(0.4mm pitch type). Insulation resistance: 50 MΩ min. No damage, cracks, or parts dislocation.	96 hours at 40℃ and humidity of 90% to 95%.
8. Temperature cycle		Temperature : -55℃→+15℃ to +35℃→+85℃→+15℃ to +35℃ Time : 30 → 2 to 3 → 30 → 2 to 3 (Minutes) 5 cycles
9. Resistance to soldering heat	No deformation of components affecting performance.	Reflow : At the recommended temperature profile Manual soldering : 350℃ ± 10℃ for 5 seconds

Note 1: Includes temperature rise caused by current flow.
Note 2: The term "storage" refers to products stored for long period of time prior to mounting and use. Operating Temperature Range and Humidity range covers non- conducting condition of installed connectors in storage, shipment or during transportation.

■Materials

Part		Material	Finish	Remarks
Insulator	FH33 series	PA	Color:Beige	UL94V-0
			Color:Deep brown	
	FH33J series	LCP	Color:Beige	
		PPS	Color:Black	
	FH33M series	LCP	Color:Beige	
		PA	Color:Deep brown	
	FH33MHJ series	LCP	Color:Beige	
		PPS	Color:Black	
Contacts		Phosphor bronze	Gold flash plated	—
Metalfittings			Pure tin reflow plated	—

■Ordering information

FH 33 M H J - 12 (6) S B - 1 SH (10)

❶ ❷ ❸ ❹ ❺ ❻ ❼ ❽ ❾ ❿ ⓫ ⓬

❶ Series name:FH ❷ Series No:33 ❸ Blank:0.5mm pitch,1mm pitch M:0.4mm pitch	❹ Blank:Width 3.0mm(standard) H:Width 3.5mm(long actuator type) ❺ Blank:Standard J:Halogen-free Flame retardance UL94V-0 ❻ Standard type:Number of contacts Eccentric type:Number of contacts in 1mm housing	❼ Standard type:Blank Eccentric type:Number of contacts ❽ Contact alignment:S: single ❾ Eccentric direction: Blank:standard type B:Eccentric type	❿ Contact pitch: 0.4mm,0.5mm,1mm ⓫ SH:SMT horizontal mounting ⓬ Plating specifications: Blank:Gold plated (10)...Gold plating with nickel barrier 5,000pieces/reel (99)...Gold plating with nickel barrier 500pieces/reel

Mar.1.2026 Copyright 2026 HIROSE ELECTRIC CO., LTD. All Rights Reserved.

■Connector Dimensions

●0.4mm pitch, 0.5mm pitch type

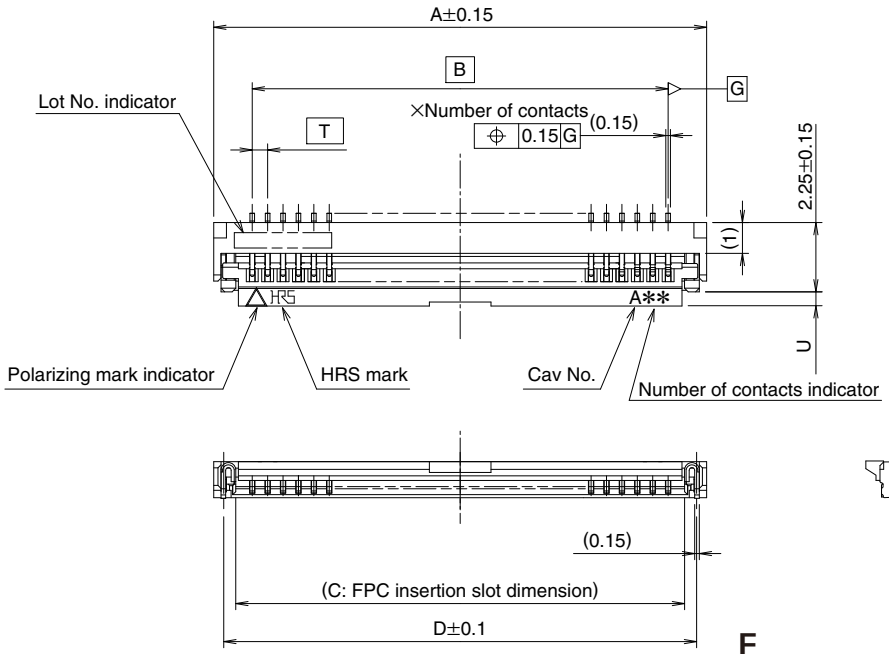

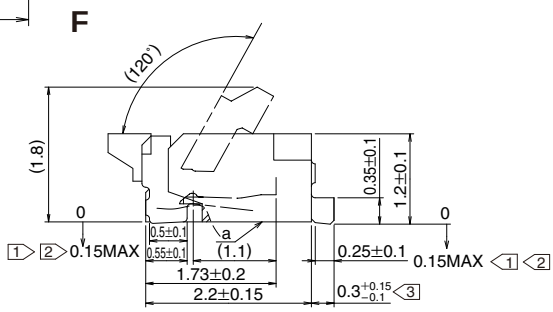

Notes 1 The coplanarity of each terminal lead is within 0.1 max.
2 The contact terminal lead position indicates the dimension from the bottom a surface of the insulator body.
3 Difference of each terminal lead is within 0.1 max.
4 Slight variations in color of the plastic compounds do not affect form, fit or function of the connector.
5 After reflow, the terminal plating may change color, however this does not represent a quality issue.

Unit: mm

Part Number	CL No.	Number of Contacts	A	B	C	D	T	U
FH33-6S-0.5SH (**)	580-1301-1-**	6	5	2.5	3.57	4.35	0.5	0.45
FH33-9S-0.5SH (**)	580-1303-7-**	9	6.5	4	5.07	5.85	0.5	0.45
FH33-10S-0.5SH (**)	580-1304-0-**	10	7	4.5	5.57	6.35	0.5	0.45
FH33-12S-0.5SH (**)	580-1302-4-**	12	8	5.5	6.57	7.35	0.5	0.45
FH33-14S-0.5SH (**)	580-1305-2-**	14	9	6.5	7.57	8.35	0.5	0.45
FH33-19S-0.5SH (**)	580-1307-8-**	19	11.5	9	10.07	10.85	0.5	0.45
FH33-20S-0.5SH (**)	580-1317-1-**	20	12	9.5	10.57	11.35	0.5	0.45
FH33-26S-0.5SH (**)	580-1306-5-**	26	15	12.5	13.57	14.35	0.5	0.45
FH33-28S-0.5SH (**)	580-1300-9-**	28	16	13.5	14.57	15.35	0.5	0.45
FH33-30S-0.5SH (**)	580-1312-8-**	30	17	14.5	15.57	16.35	0.5	0.45
FH33-32S-0.5SH (**)	580-1310-2-**	32	18	15.5	16.57	17.35	0.5	0.45
FH33-36S-0.5SH (**)	580-1311-5-**	36	20	17.5	18.57	19.35	0.5	0.45
FH33-40S-0.5SH (**)	580-1308-0-**	40	22	19.5	20.57	21.35	0.5	0.45
FH33-45S-0.5SH (**)	580-1316-9-**	45	24.5	22	23.07	23.85	0.5	0.45
FH33M-16S-0.4SH (**)	580-1319-7-**	16	8.3	6	6.87	7.65	0.4	0.45
FH33J-4S-0.5SH (**)	580-1329-0-**	4	4	1.5	2.57	3.35	0.5	0.45
FH33J-10S-0.5SH (**)	580-1324-7-**	10	7	4.5	5.57	6.35	0.5	0.45
FH33J-12S-0.5SH (**)	580-1328-8-**	12	8	5.5	6.57	7.35	0.5	0.45
FH33J-16S-0.5SH (**)	580-1331-2-**	16	10	7.5	8.57	9.35	0.5	0.45
FH33J-18S-0.5SH (**)	580-1334-0-**	18	11	8.5	9.57	10.35	0.5	0.45
FH33J-19S-0.5SH (**)	580-1332-5-**	19	11.5	9	10.07	10.85	0.5	0.45
FH33J-40S-0.5SH (**)	580-1330-0-**	40	22	19.5	20.57	21.35	0.5	0.45
FH33MHJ-65S-0.4SH (**)	580-1325-0-**	65	27.9	25.6	26.47	27.25	0.4	0.95

Note 1: Embossed reel packaging (5,000 pieces/reel, 500 pieces/reel).
Order by number of reels.

Mar.1.2026 Copyright 2026 HIROSE ELECTRIC CO., LTD. All Rights Reserved.

■Connector Dimensions

●1mm pitch type

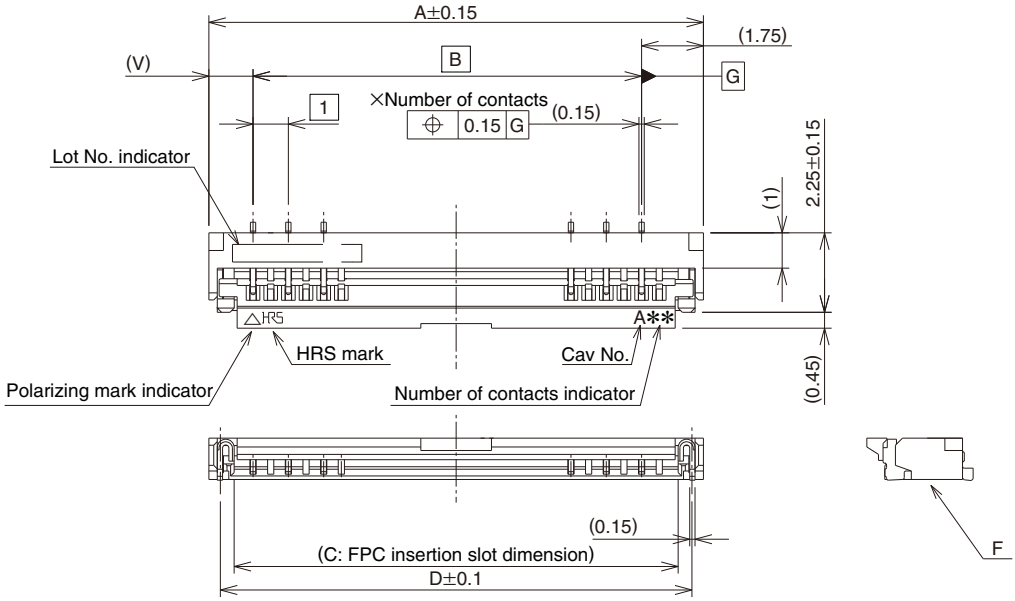

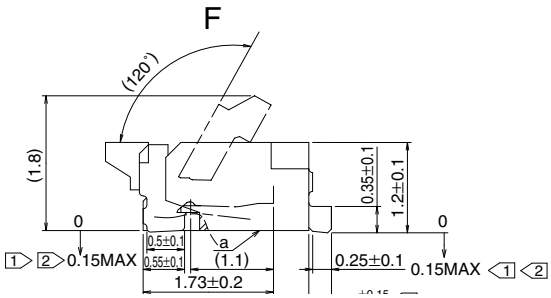

Notes 1 The coplanarity of each terminal lead is within 0.1 max.
2 The contact terminal lead position indicates the dimension from the bottom a surface of the insulator body.
3 Difference of each terminal lead is within 0.1 max.
4 Slight variations in color of the plastic compounds do not affect form, fit or function of the connector.
5 After reflow, the terminal plating may change color, however this does not represent a quality issue.

Unit: mm

Part Number	CL No.	Number of Contacts	A	B	C	D	V
FH33-4S-1SH(**)	580-1322-1-**	4	6.5	3	5.07	5.85	1.75
FH33-12(6)SB-1SH(**)	580-1323-4-**	6	8	5	6.57	7.35	1.25
FH33J-12(6)SB-1SH(**)	580-1326-2-**	6	8	5	6.57	7.35	1.25

Note 1: Embossed reel packaging (5,000 pieces/reel, 500 pieces/reel).
Order by number of reels.

Mar.1.2026 Copyright 2026 HIROSE ELECTRIC CO., LTD. All Rights Reserved.

■Recommended PCB mounting pattern and metal mask dimensions

●0.4mm pitch, 0.5mm pitch type

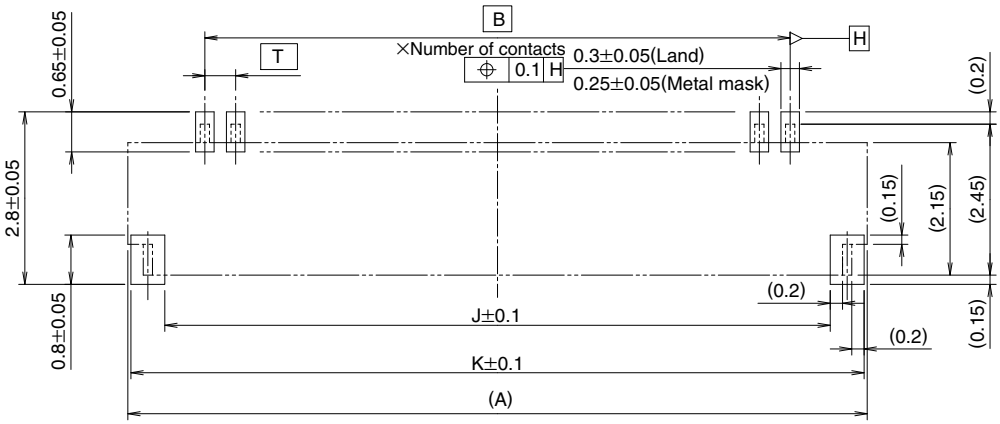

∗Recommended metal mask thickness = 0.1mm

■Recommended FPC/FFC dimensions

●0.4mm pitch, 0.5mm pitch type

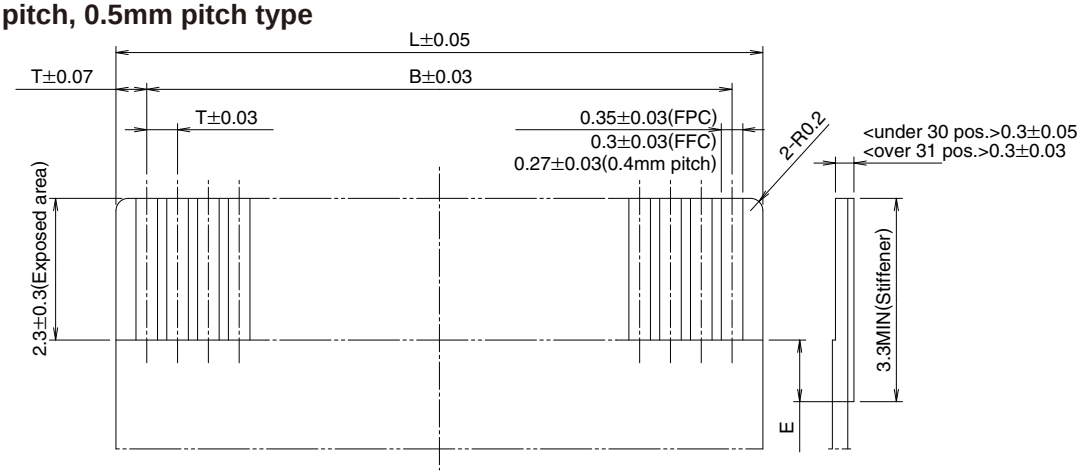

Note 1: If the stiffener is less than 3.3 mm, E dimension must be 0.5 mm min.

Unit: mm

Part Number	CL No.	Number of Contacts	A	B	J	K	L	T
FH33-6S-0.5SH (∗∗)	580-1301-1-∗∗	6	5	2.5	3.8	4.9	3.5	0.5
FH33-9S-0.5SH (∗∗)	580-1303-7-∗∗	9	6.5	4	5.3	6.4	5	0.5
FH33-10S-0.5SH (∗∗)	580-1304-0-∗∗	10	7	4.5	5.8	6.9	5.5	0.5
FH33-12S-0.5SH (∗∗)	580-1302-4-∗∗	12	8	5.5	6.8	7.9	6.5	0.5
FH33-14S-0.5SH (∗∗)	580-1305-2-∗∗	14	9	6.5	7.8	8.9	7.5	0.5
FH33-19S-0.5SH (∗∗)	580-1307-8-∗∗	19	11.5	9	10.3	11.4	10	0.5
FH33-20S-0.5SH (∗∗)	580-1317-1-∗∗	20	12	9.5	10.8	11.9	10.5	0.5
FH33-26S-0.5SH (∗∗)	580-1306-5-∗∗	26	15	12.5	13.8	14.9	13.5	0.5
FH33-28S-0.5SH (∗∗)	580-1300-9-∗∗	28	16	13.5	14.8	15.9	14.5	0.5
FH33-30S-0.5SH (∗∗)	580-1312-8-∗∗	30	17	14.5	15.8	16.9	15.5	0.5
FH33-32S-0.5SH (∗∗)	580-1310-2-∗∗	32	18	15.5	16.8	17.9	16.5	0.5
FH33-36S-0.5SH (∗∗)	580-1311-5-∗∗	36	20	17.5	18.8	19.9	18.5	0.5
FH33-40S-0.5SH (∗∗)	580-1308-0-∗∗	40	22	19.5	20.8	21.9	20.5	0.5
FH33-45S-0.5SH (∗∗)	580-1316-9-∗∗	45	24.5	22	23.3	24.4	23	0.5
FH33M-16S-0.4SH (∗∗)	580-1319-7-∗∗	16	8.3	6	7.1	8.2	6.8	0.4
FH33J-4S-0.5SH (∗∗)	580-1329-0-∗∗	4	4	1.5	2.8	3.9	2.5	0.5
FH33J-10S-0.5SH (∗∗)	580-1324-7-∗∗	10	7	4.5	5.8	6.9	5.5	0.5
FH33J-12S-0.5SH (∗∗)	580-1328-8-∗∗	12	8	5.5	6.8	7.9	6.5	0.5
FH33J-16S-0.5SH (∗∗)	580-1331-2-∗∗	16	10	7.5	8.8	9.9	8.5	0.5
FH33J-18S-0.5SH (∗∗)	580-1334-0-∗∗	18	11	8.5	9.8	10.9	9.5	0.5
FH33J-19S-0.5SH (∗∗)	580-1332-5-∗∗	19	11.5	9	10.3	11.4	10	0.5
FH33J-40S-0.5SH (∗∗)	580-1330-0-∗∗	40	22	19.5	20.8	21.9	20.5	0.5
FH33MHJ-65S-0.4SH (∗∗)	580-1325-0-∗∗	65	27.9	25.6	26.7	27.8	26.4	0.4

Mar.1.2026 Copyright 2026 HIROSE ELECTRIC CO., LTD. All Rights Reserved.

■Recommended PCB mounting pattern and metal mask dimensions

●1mm pitch type

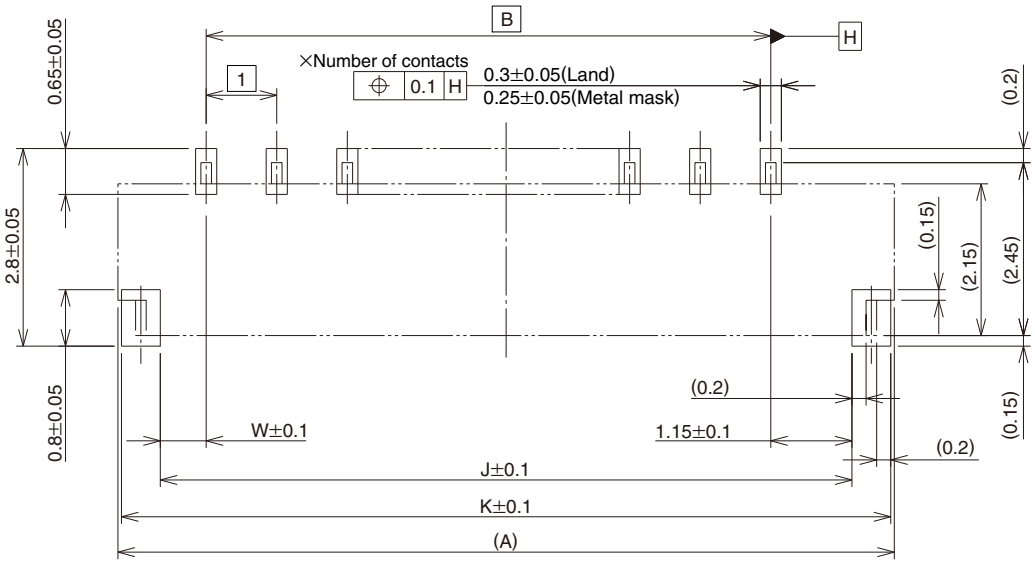

∗Recommended metal mask thickness = 0.1mm

■Recommended FPC/FFC dimensions

●1mm pitch type

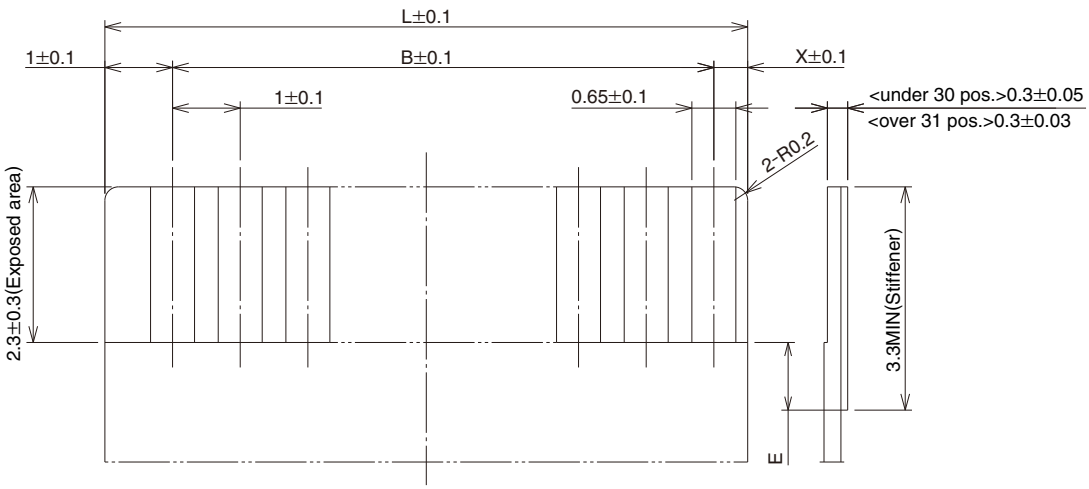

Unit: mm

Part Number	CL No.	Number of Contacts	A	B	J	K	L	W	X
FH33-4S-1SH(∗∗)	580-1322-1-∗∗	4	6.5	3	5.3	6.4	5	1.15	1
FH33-12(6)SB-1SH(∗∗)	580-1323-4-∗∗	6	8	5	6.8	7.9	6.5	0.65	0.5
FH33J-12(6)SB-1SH(∗∗)	580-1326-2-∗∗	6	8	5	6.8	7.9	6.5	0.65	0.5

Mar.1.2026 Copyright 2026 HIROSE ELECTRIC CO., LTD. All Rights Reserved.

■FH33 Series FPC/FFC Construction (Recommended Specifications)

1. Using Single-sided FPC

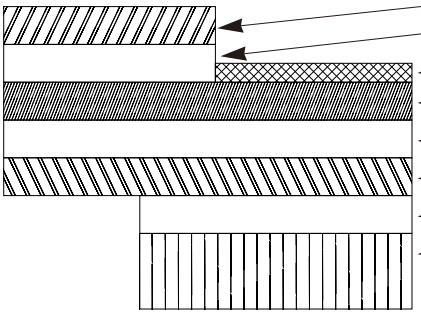

Material Name	Material	Thickness (μm)
Covering film layer	Polyimide 1 mil thick	(25)
Cover adhesive		(25)
Surface treatment	Nickel under plated 1 to 5μm / Gold plated 0.2μm	3
Copper foil	Cu 1oz	35
Base adhesive	Heat-hardened adhesive	25
Base film	Polyimide 1 mil thick	25
Reinforcement material adhesive	Heat-hardened adhesive	30
Stiffener	Polyimide 7 mil thick	175
	Total	293

2. Using Double-sided FPC

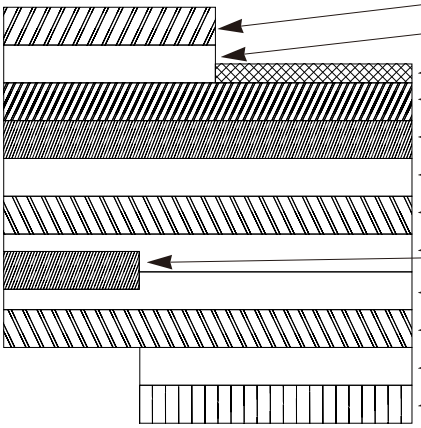

Material Name	Material	Thickness (μm)
Covering film layer	Polyimide 1 mil thick	(25)
Cover adhesive		(25)
Surface treatment	Nickel under plated 1 to 5μm / Gold plated 0.2μm	3
Through-hole copper	Cu	15
Copper foil	Cu 1/2oz	18
Base adhesive	Heat-hardened adhesive	18
Base film	Polyimide 1 mil thick	25
Base adhesive	Heat-hardened adhesive	18
Copper foil	Cu 1/2oz	18
Cover adhesive		25
Covering film layer	Polyimide 1 mil thick	25
Reinforcement material adhesive	Heat-hardened adhesive	50
Stiffener	Polyimide 4 mil thick	100
	Total	297

3. Using FFC

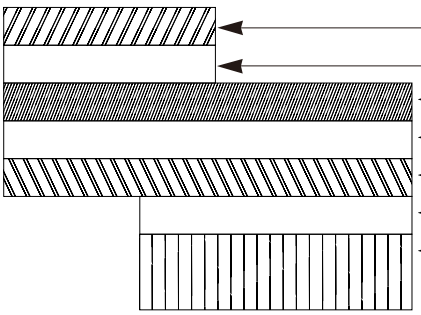

Material Name	Material	Thickness (μm)
Polyester film		(12)
Adhesive	polyester thermoplastic type	(30)
Gold plated, soft copper film		35
Adhesive	Polyester	30
Polyester		12
Adhesive	Polyester	30
Stiffener	Polyester	188
	Total	295

※ Practical tolerance of thickness dimension is ±20 μm

4. Precautions

1. This specification is a recommendation for the construction of the FH33 Series FPC and FFC (t=0.3 ± 0.05).
2. For details about the construction, please contact the FPC/FFC manufacturers.

Mar.1.2026 Copyright 2026 HIROSE ELECTRIC CO., LTD. All Rights Reserved.

■Packaging Specifications

●Embossed Carrier Tape Dimensions (Tape width up to 24mm)

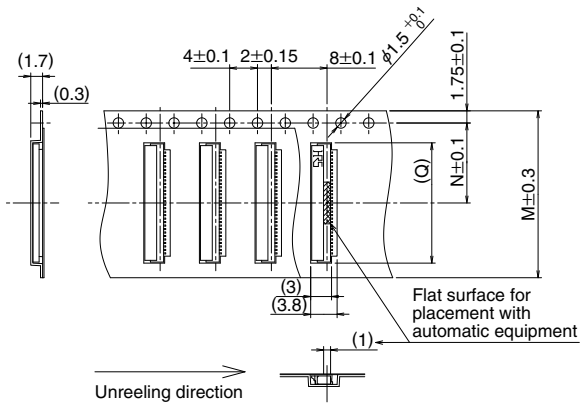

●Embossed Carrier Tape Dimensions (Tape width 32mm and over)

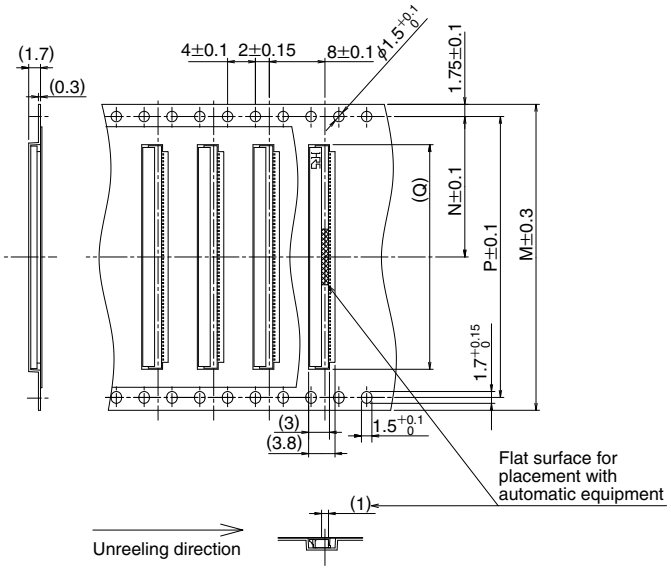

●Reel Dimensions

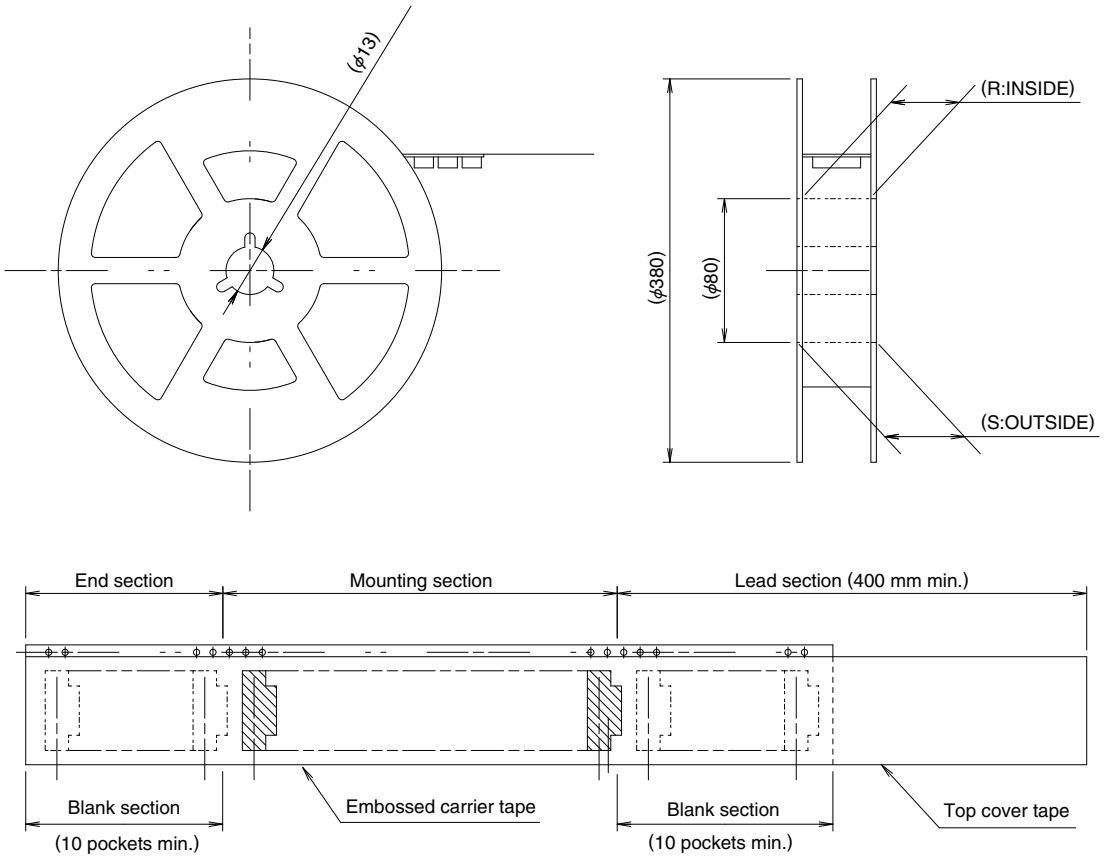

Note: 5,000 pieces per reel.
Embossed tape 32 mm or wider will have perforated feed holes on two sides.

Mar.1.2026 Copyright 2026 HIROSE ELECTRIC CO., LTD. All Rights Reserved.

Unit: mm

Part Number	CL No.	Number of Contacts	M	N	P	Q	R	S
FH33-6S-0.5SH (**)	580-1301-1-**	6	16	7.5	——	5.3	17.4	21.4
FH33-9S-0.5SH (**)	580-1303-7-**	9	16	7.5	——	6.8	17.4	21.4
FH33-10S-0.5SH (**)	580-1304-0-**	10	16	7.5	——	7.3	17.4	21.4
FH33-12S-0.5SH (**)	580-1302-4-**	12	16	7.5	——	8.3	17.4	21.4
FH33-14S-0.5SH (**)	580-1305-2-**	14	16	7.5	——	9.3	17.4	21.4
FH33-19S-0.5SH (**)	580-1307-8-**	19	24	11.5	——	11.8	25.4	29.4
FH33-20S-0.5SH (**)	580-1317-1-**	20	24	11.5	——	12.3	25.4	29.4
FH33-26S-0.5SH (**)	580-1306-5-**	26	24	11.5	——	15.3	25.4	29.4
FH33-28S-0.5SH (**)	580-1300-9-**	28	24	11.5	——	16.3	25.4	29.4
FH33-30S-0.5SH (**)	580-1312-8-**	30	24	11.5	——	17.3	25.4	29.4
FH33-32S-0.5SH (**)	580-1310-2-**	32	32	14.2	28.4	18.3	33.4	37.4
FH33-36S-0.5SH (**)	580-1311-5-**	36	32	14.2	28.4	20.3	33.4	37.4
FH33-40S-0.5SH (**)	580-1308-0-**	40	44	20.2	40.4	22.3	45.4	49.4
FH33-45S-0.5SH (**)	580-1316-9-**	45	44	20.2	40.4	24.8	45.4	49.4
FH33M-16S-0.4SH (**)	580-1319-7-**	16	24	11.5	——	8.6	25.4	29.4
FH33J-4S-0.5SH (**)	580-1329-0-**	4	16	7.5	——	4.3	17.4	21.4
FH33J-10S-0.5SH (**)	580-1324-7-**	10	16	7.5	——	7.3	17.4	21.4
FH33J-12S-0.5SH (**)	580-1328-8-**	12	16	7.5	——	8.3	17.4	21.4
FH33J-16S-0.5SH (**)	580-1331-2-**	16	24	11.5	——	10.3	25.4	29.4
FH33J-18S-0.5SH (**)	580-1334-0-**	18	24	11.5	——	11.3	25.4	29.4
FH33J-19S-0.5SH (**)	580-1332-5-**	19	24	11.5	——	11.8	25.4	29.4
FH33J-40S-0.5SH (**)	580-1330-0-**	40	44	20.2	40.4	22.3	45.4	49.4
FH33MHJ-65S-0.4SH (**)	580-1325-0-**	65	44	20.2	40.4	28.2	45.4	49.4
FH33-4S-1SH (**)	580-1322-1-**	4	16	7.5	——	6.8	17.4	21.4
FH33-12(6)S-1SH (**)	580-1323-4-**	6	16	7.5	——	8.3	17.4	21.4
FH33J-12(6)S-1SH (**)	580-1326-2-**	6	16	7.5	——	8.3	17.4	21.4

Mar.1.2026 Copyright 2026 HIROSE ELECTRIC CO., LTD. All Rights Reserved.

■Recommended Temperature Profile

●Using Lead-free Solder paste

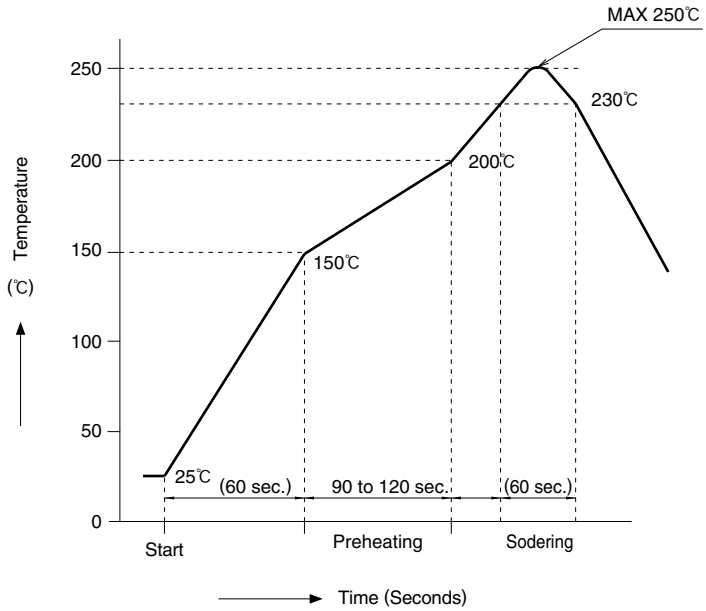

HRS test conditions

Solder method : Reflow, IR/hot air

Environment : Room air

Solder composition : Paste, 96.5%Sn/3.0%Ag/0.5%Cu (Senju Metal Industry, Co., Ltd.'s Part Number: M705-221CM5-32-10.5)

Test board : Glass epoxy 25mm×50mm×0.8mm thick

Land dimensions : Contacts lead 0.3mm×0.65mm
Metal fittings 0.55mm×0.8mm

Metal mask : Contacts lead 0.25mm×0.65mm×0.1mm thick
Metal fittings 0.55mm×0.8mm×0.1mm thick

This temperature profile is based on the above conditions. In individual applications the actual temperature may vary, depending on solder paste type, volume/thickness and board
size/thickness. Consult your solder paste and equipment manufacturer for specific recommendations.

Mar.1.2026 Copyright 2026 HIROSE ELECTRIC CO., LTD. All Rights Reserved.

■Operation and Precautions

Operation

1.FPC insertion procedure. Connector installed on the board.

❶ Lift up the actuator. Use thumb or index finger.

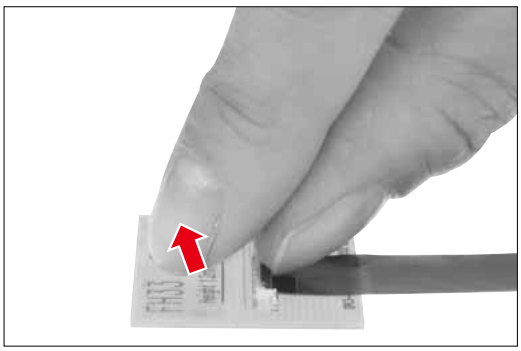

❷ Fully insert the FPC in the connector parallel to mounting surface, with the exposed conductive traces facing down.

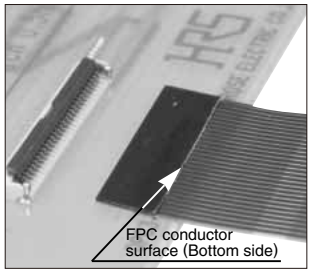

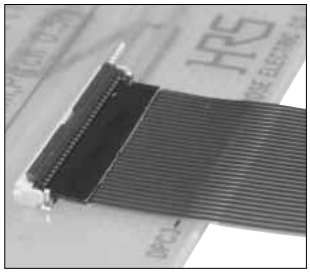

❸ Rotate down the actuator until firmly closed. It is critical that the inserted FPC is not moved and remains fully inserted.

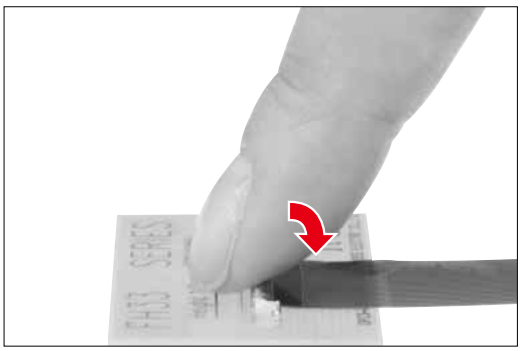

2.FPC removal

❶ Lift up the actuator. Carefully withdraw the FPC.

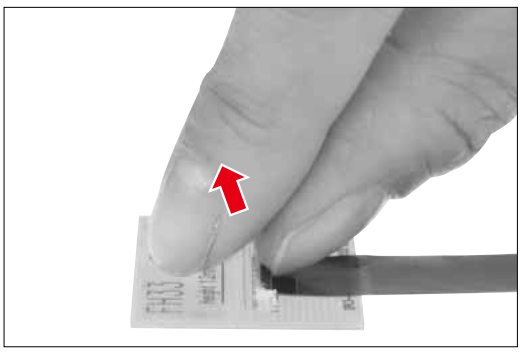

Mar.1.2026 Copyright 2026 HIROSE ELECTRIC CO., LTD. All Rights Reserved.

Precautions

Exercise care when handling connectors. Follow recommendations given below.

PC board flexing

◆PC board connector mounting area
The connectors are straight within 0.1 mm max.
Make sure that the PC board connector mounting area flatness can accept the connector terminals without causing any failure of the solder joints.

◆Handling before mounting on PCB
Insertion of the FPC or operation of the actuator prior to mounting on the PCB is NOT RECOMMENDED.

◆PC Board handling
Exercise caution when handling boards with the connectors installed. Do not apply any forces affecting soldered joints.

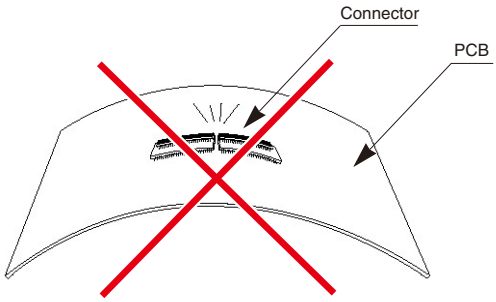

Precautions When Inserting or Removing FPC

Pay attention to the following points when inserting FPC.

◆Actuator operation

❶Do not apply excessive force when opening the actuator prior to FPC insertion. When opening make sure that the force is applied only to the actuator itself, avoiding touching of the contacts.

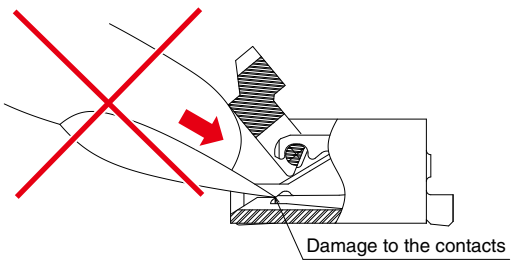

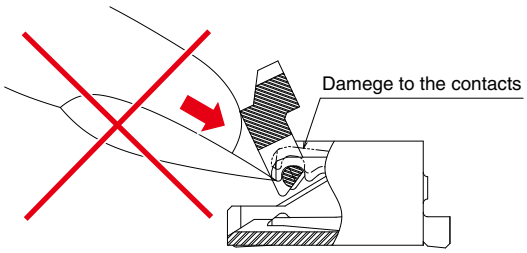

❷Axis of rotation

Assure free rotation of the actuator

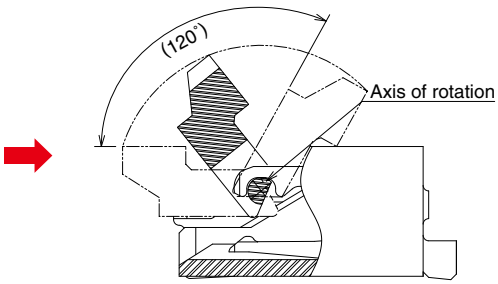

❸The actuator will rotate 120 degrees maximum. Do not force it to rotate further.

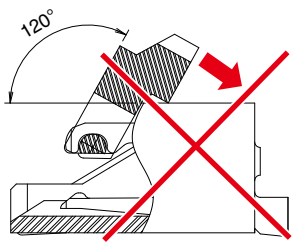

Mar.1.2026 Copyright 2026 HIROSE ELECTRIC CO., LTD. All Rights Reserved.

Precautions

❹When operating the actuator, do so at the center portion.

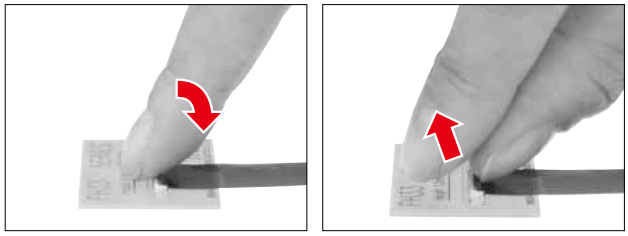

❺As illustrated, do not attempt removal or re-positioning of the actuator.

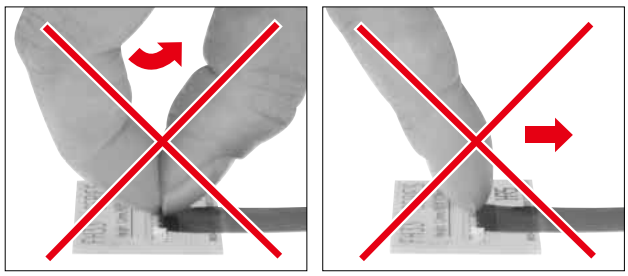

◆ FPC Insertion①

The FPC should be aligned parallel with the board surface and perpendicular with the connector (as shown), then completely inserted.

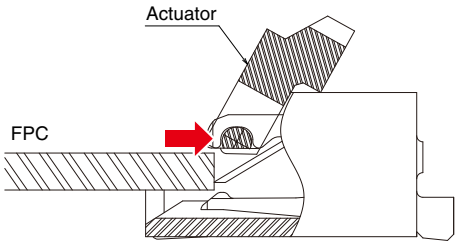

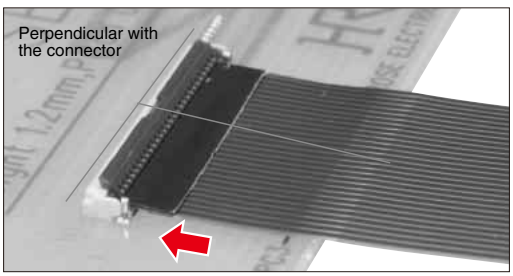

To assure correct electrical and mechanical connection do not insert FPC at angle. It must be fully inserted.

Make sure that the FPC is NOT MOVED during the closing of the actuator.

◆FPC Insertion②

When inserting the FPC, do not forcefully rub against the bottom surface of the connector insertion entrance. Doing so will result in the contacts and FPC making strong contact and may cause deformation of the contacts, peeling of the FPC conductor, and other problems.

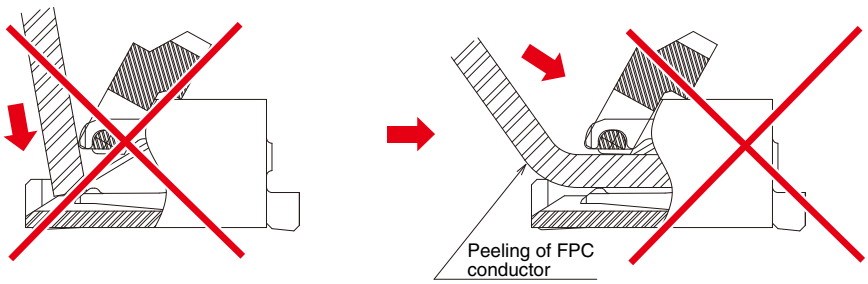

Mar.1.2026 Copyright 2026 HIROSE ELECTRIC CO., LTD. All Rights Reserved.

Precautions

◆Verification of the fully closed actuator.
The actuator should be fully closed (as illustrated) and the FPC held firmly in the connector.
Do not press against the actuator when is fully closed. Max force applied to the fully closed actuator should not exceed 1 N.

Routing the FPC (FPC fully inserted/ actuator closed)

◆FPC Load
Do not apply force in excess of 0.15N max. in the upward direction (as illustrated). Do not bend the FPC too close to the actuator.

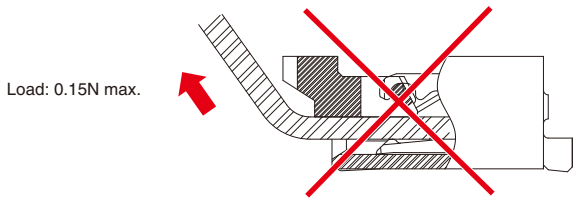

Removing the FPC

Rotate the actuator to the open position (maximum open angle of 120°). Carefully withdraw the FPC.

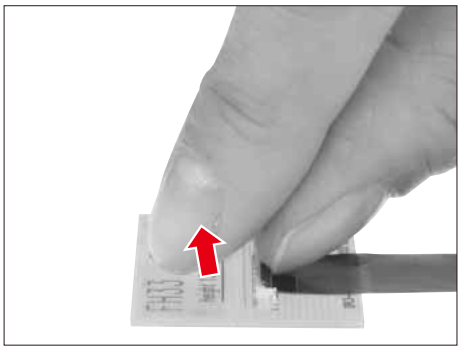

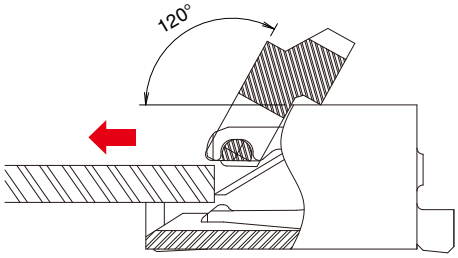

Other Precautions

◆Hand Soldering Precautions
When hand soldering:
❶Do not perform reflow or hand soldering with the FPC inserted in the connector.
❷Do not apply excessive heat or touch the soldering iron anywhere other than the connector leads.
❸Do not use excessive amount of solder or flux compounds.
Operation of the actuator and contacts may be affected by excessive amounts of solder or flux compounds.

Mar.1.2026 Copyright 2026 HIROSE ELECTRIC CO., LTD. All Rights Reserved.

NOTES :

Mar.1.2026 Copyright 2026 HIROSE ELECTRIC CO., LTD. All Rights Reserved.

USA:
HIROSE ELECTRIC (U.S.A.), INC. Headquarters
2688 Westhills Court, Simi Valley, CA 93065-6235
Phone : 1-805-522-7958
Fax : 1-805-522-3217
http://www.hiroseusa.com

USA:
HIROSE ELECTRIC (U.S.A.), INC. North California Office
20400 Stevens Creek Blvd., Ste 250, Cupertino, CA 95014
Phone : 1-408-253-9640
Fax : 1-408-253-9641
http://www.hiroseusa.com

USA:
HIROSE ELECTRIC (U.S.A.), INC. Detroit Office (Automotive)
37677 Professional Center Drive, Suite #100C
Livonia, MI 48154
Phone : 1-734-542-9963
Fax : 1-734-542-9964
http://www.hiroseusa.com

GERMANY:
HIROSE ELECTRIC EUROPE B.V. GERMAN BRANCH
Herzog-Carl-Strasse 4 D-73760 Ostfildern
(Scharnhauser Park)
Phone : 49-711-4560-02-1
Fax : 49-711-4560-02-299
http://www.hirose.de

THE NETHERLANDS:
HIROSE ELECTRIC EUROPE B.V.
Hogehillweg #8 1101 CC Amsterdam Z-O
Phone : 31-20-6557460
Fax : 31-20-6557469
http://www.hiroseeurope.com

UK:
HIROSE ELECTRIC EUROPE B.V. UK BRANCH
First Floor, St Andrews House, Caldecotte Lake Business Park, Milton Keynes MK7 8LE
Phone : 44-1908-369060
Fax : 44-1908-369078
http://www.hirose.co.uk

CHINA:
HIROSE ELECTRIC CO., LTD. BEIJING REPRESENTATIVE OFFICE
A1001, Ocean International Center, Building 56# East 4th Ring Middle Road, Chao Yang District, Beijing, 100025
Phone : 86-10-5165-9332
Fax : 86-10-5908-1381
http://www.hirose-china.com.cn

CHINA:
HIROSE ELECTRIC (SHANGHAI) CO., LTD.
1501-02, Cross Tower Building, 318 Fuzhou Road, Huang Pu District, Shanghai 200001
Phone : 86-21-6391-3355
Fax : 86-21-6335-0767
http://www.hirose-china.com.cn

CHINA:
HIROSE ELECTRIC CO., LTD. SHENZHEN OFFICE
Room 09-13, 19/F, Office Tower Shun Hing Square, Di Wang Commercial Centre 5002, ShenNanDong Road, ShenZhen City, Guangdong Province, 518008
Phone : 86-755-8207-0851
Fax : 86-755-8207-0873
http://www.hirose-china.com.cn

HONG KONG:
HIROSE ELECTRIC HONGKONG TRADING CO., LTD.
Unit 1102 A&B, Energy Plaza, 92 Granville Road, Tsim Sha Tsui East, Kowloon
Phone : 852-2803-5338
Fax : 852-2591-6560
http://www.hirose-hongkong.com.hk

TAIWAN:
HIROSE ELECTRIC TAIWAN CO., LTD.
103 8F, No.87, Zhengzhou Rd., Taipei
Phone : 886-2-2555-7377
Fax : 886-2-2555-7350
http://www.hirose-taiwan.com.tw

SINGAPORE:
HIROSE ELECTRIC CO., LTD.
10 Anson Road #26-16 International Plaza 079903
Phone : 65-6324-6113
Fax : 65-6324-6123
http://www.hirose-singapore.com.sg

KOREA:
HIROSE KOREA CO., LTD.
1261-10, Jeoungwhang-Dong, Shihung-City, Kyunggi-Do 429-450
Phone : 82-31-496-7000,7124
Fax : 82-31-496-7100
http://www.hirose.co.kr

Mar.1.2026 Copyright 2026 HIROSE ELECTRIC CO., LTD. All Rights Reserved.

Creative Links to World Electronics ®

HRS

HIROSE ELECTRIC CO.,LTD.
6-3,Nakagawa Chuoh-2-Chome,Tsuzuki-Ku,Yokohama-Shi 224-8540,JAPAN
TEL: +81-45-620-3526 Fax: +81-45-591-3726
http://www.hirose.com
http://www.hirose-connectors.com