Mar.1.2026 Copyright 2026 HIROSE ELECTRIC CO., LTD. All Rights Reserved.
In case of consideration for using Automotive equipment / device which demand high reliability, kindly contact our sales window correspondents.

HRS DRAWING FOR REFERENCE

PCB Layout

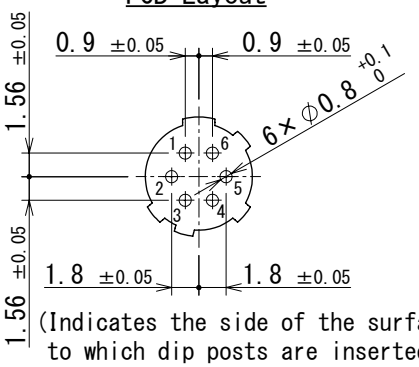

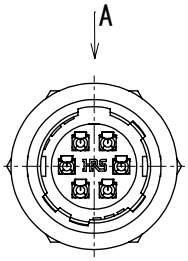

A
Detail of mounting guide

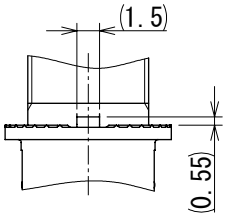

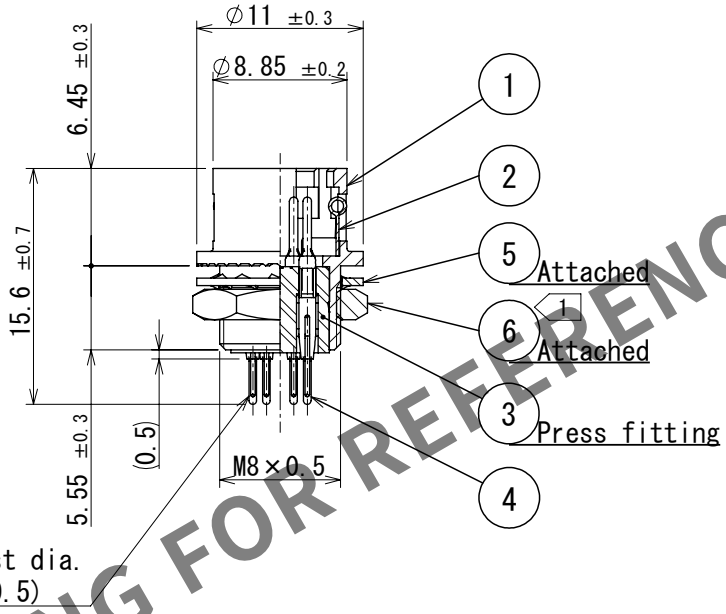

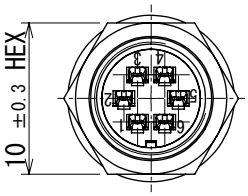

Panel cutout
t=0.7 to 2

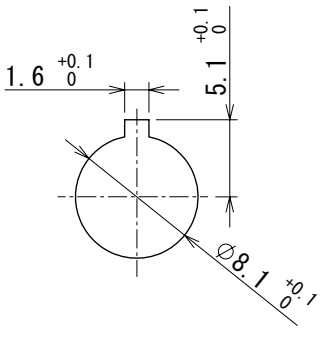

△1 Note 1 The recommended clamp torque of Ref.No.⑥:1.5 N・m. Loctite 243, Henkel Japan or equivalent apply to prevent Ref.No.⑥ from loosening.

CAD change △1

NO.	MATERIAL	FINISH , REMARKS	NO.	MATERIAL	FINISH , REMARKS
3	Polybutylene terephthlate	(Black) UL94V-0	6	Brass	Nickel plating
2	Stainless steel		5	Phosphor bronze	Nickel plating
1	Zinc alloy	Matte finish nickel plated	4	Phosphor bronze	Silver plating 2μm min.

UNITS	SCALE		COUNT	DESCRIPTION OF REVISIONS	DESIGNED	CHECKED	DATE
mm	2:1	△1	2	DIS-C-00021778	TY.SUZUKI	HY.KOBAYASHI	2026.03.03

HIROSE ELECTRIC CO., LTD.

APPROVED :	MR.YOSHIDA	2005.01.05
CHECKED :	MO.SATOH	2005.01.05
DESIGNED :	YH.YAMADA	2005.01.05
DRAWN :	YH.YAMADA	2005.01.05

DRAWING NO. EDC-042753-73-73
PART NO. HR10G-7R-6PB(73)
CODE NO. CL0110-1806-4-73
△1 1/1

FORM HC0011-5