May.1.2019 Copyright 2019 HIROSE ELECTRIC CO., LTD. All Rights Reserved.
In case of consideration for using Automotive equipment / device which demand high reliability, kindly contact our sales window correspondents.

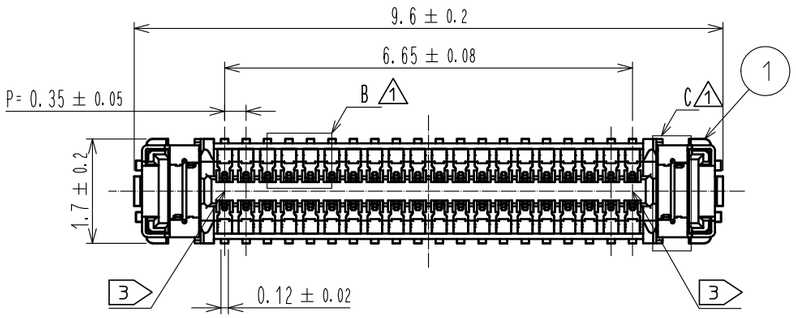

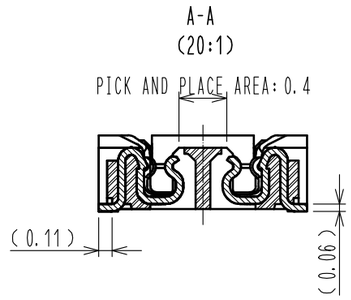

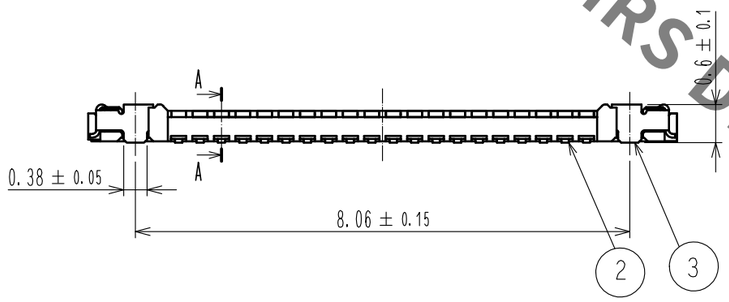

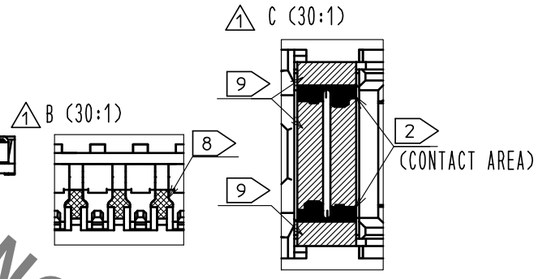

ENGAGEMENT FIGURE (20:1)

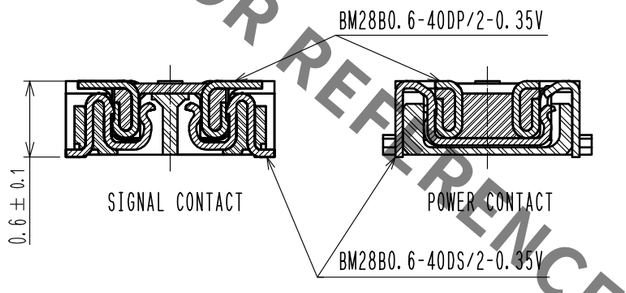

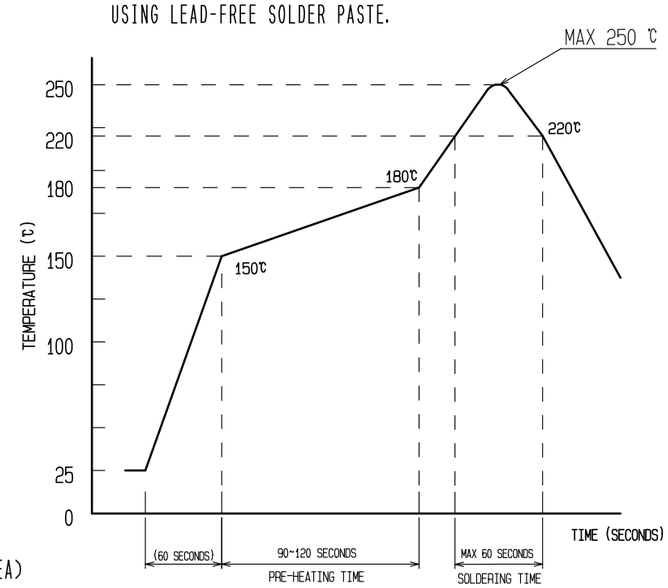

REFLOW METHOD:IR REFLOW
NUMBER OF REFLOW CYCLES:2 CYCLES MAX.
1)REFLOW TIME
DURATION ABOVE 220℃, 60 SEC MAX.
(PEAK TEMPERATURE:250℃ MAX)
2)PRE-HEAT TIME
PRE-HEAT TEMPERATURE(MIN):150℃
PRE-HEAT TEMPERATURE(MAX):180℃
PRE-HEAT TIME:90-120 SEC.

NOTE 1 . ALL LEAD CO-PLANARITY SHALL BE 0.08mm MAX.
2 CONTACT PLATING SPECIFICATIONS
CONTACT AREA : GOLD 0.05μm MIN
SMT LEAD : GOLD 0.05μm MIN
UNDER PLATING : NICKEL 1μm MIN
(SURFACE : SEALING)
3 CAV NO. AND HRS MARK EXIST IN THE INDICATED POSITION.

4 THIS TEMPERATURE PROFILE IS PER THE CONDITIONS SHOWN ABOVE. ADDISIONAL FACTORS. SUCH AS SOLDER PASTE TYPE, PCB SIZE AND OTHER MOUNTED COMPONENTS COULD AFFECT THE PROFILE. THEREFORE, A THOROUGH EVALUATION OF MOUNTING COONDITION IS REQUIRED PRIOR TO PRODUCTION. TEPERATURE IS MEASURED AT CONTACT LEAD.
5. PLEASE CONTACT US IN CASE YOU WILL MAKE DIFFERENT SETTINGS FROM OUR RECOMMENDATION.
6. THIS PRODUCT SATISFIES HALOGEN FREE REQUIREMENTS DEFINED AS 900ppm MAXIMUM CHLORINE, 900ppm MAXIMUM BROMINE, AND 1500ppm MAXIMUM TOTAL OF CHLORINE AND BROMINE.
7. THIS PRODUCT COMPLY WITH RoHS.
1 8 WELD LINE APPEARS IN THE INDICATED POSITION.
1 9 NO GOLD PLATING IS ACCEPTABLE FOR THIS AREA.

◆RECOMMENDED PCB LAYOUT

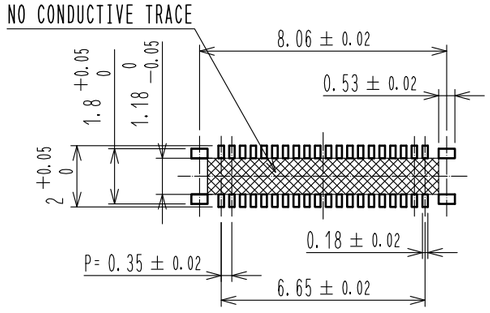

◆RECOMMENDED METAL MASK DIMENSIONS
METAL MASK THICKNESS : 80μm 1

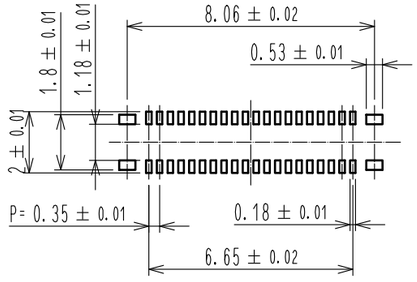

NO.	MATERIAL	FINISH , REMARKS	NO.	MATERIAL	FINISH , REMARKS
4	PS	CLEAR(EMBOSSED CARRIER TAPE)			
3	COPPER ALLOY	2	7	PS	CLEAR (REINFORCEMENT COLLAR)
2	COPPER ALLOY	2	6	PS	BLACK (PLASTIC REEL)
1	LCP	UL94 V-0, BLACK	5	POLYESTER	CLEAR (COVER TAPE)

UNITS	SCALE	COUNT	DESCRIPTION OF REVISIONS	DESIGNED	CHECKED	DATE
mm	10 : 1	1 7	DIS-H-00002481	RT. SHIMIZU	TS. MIYAZAKI	17. 01. 06

HRS HIROSE ELECTRIC CO., LTD.

APPROVED	: MO. ISHIDA	15. 08. 18
CHECED	: TS. MIYAZAKI	15. 08. 18
DESIGNED	: NY. YAMASHIRO	15. 08. 18
DRAWN	: KR. AJITO	15. 08. 18

DRAWING NO. EDC-363042-51-01
PART NO. BM28B0.6-40DS/2-0.35V(51)
CODE NO. CL673-5019-0-51
1 1/2

HRS DRAWING FOR REFERENCE

May.1.2019 Copyright 2019 HIROSE ELECTRIC CO., LTD. All Rights Reserved.
In case of consideration for using Automotive equipment / device which demand high reliability, kindly contact our sales window correspondents.

EMBOSSED CARRIER TAPE PACKAGING (5:1)

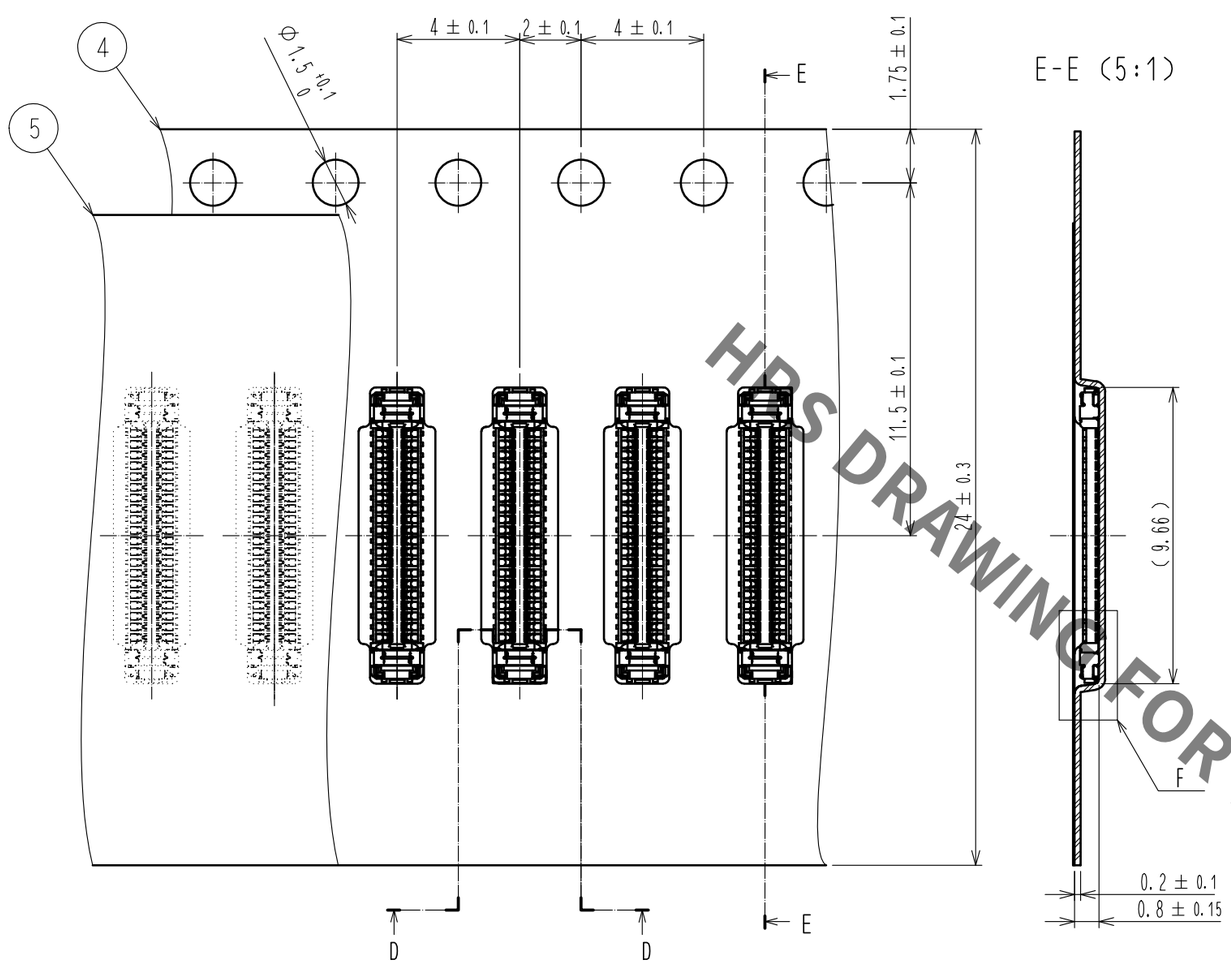

E-E (5:1)

D-D (5:1)

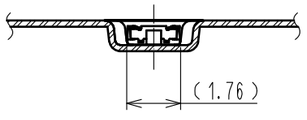

DIRECTION OF UNREELING

F (10:1)

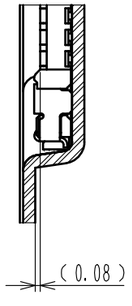

STYLE AND DIMENSION OF REEL (FREE)

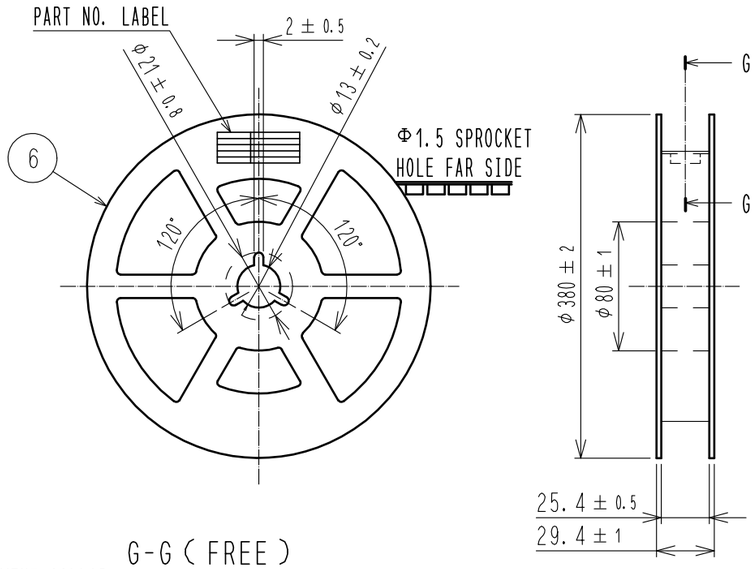

G-G (FREE)

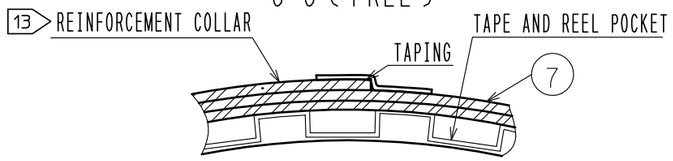

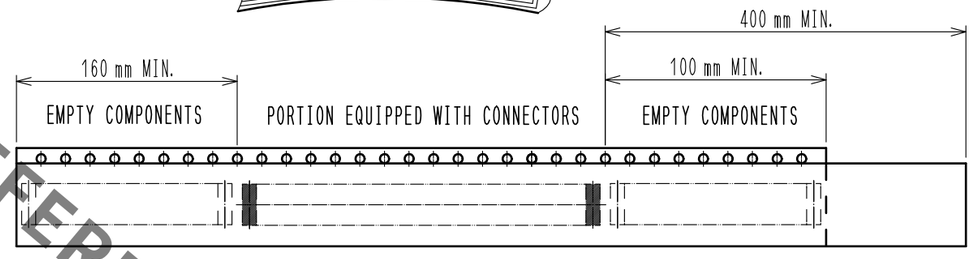

12 TAPING(FREE)

DETAIL OF PART NO. LABEL

製造年月日	** ** **	DATA OF MANUFACTURED
製品コード	CL0673-****-**	CODE NO.
製品名	BM28B0.6-**	PART NO.
数量	20,000	QUANTITY
納入者	ヒロセ電機(株)	SUPPLIER

10 . PER REEL 20,000 CONNECTORS.
11 . THE DIMENSIONS IN PARENTHESES ARE FOR REFERENCE.
12 . REFER TO JIS C 0806, IEC 60286-3(PACKAGING OF COMPONENTS FOR AUTOMATIC HANDLING)
13 . AFTER PACKAGING. ROLL 2 METERS OF THE REINFORCEMENT COLLAR TO OUTER CIRCUMFERENCE OF TAPE AND REEL POCKET. AND TAPE DOWN AT THE END THE COLLAR.

HRS DRAWING FOR REFERENCE

HRS	
DRAWING NO.	EDC-363042-51-01
PART NO.	BM28B0.6-40DS/2-0.35V(51)
CODE NO.	CL673-5019-0-51
1	2/2