Oct.1.2019 Copyright 2019 HIROSE ELECTRIC CO., LTD. All Rights Reserved.
In case of consideration for using Automotive equipment / device which demand high reliability, kindly contact our sales window correspondents.

	COUNT	DESCRIPTION OF REVISIONS	BY	CHKD	DATE		COUNT	DESCRIPTION OF REVISIONS	BY	CHKD	DATE
1	6	RE-H-06558	I.D	T.M	'04.12.21						. .
					. .						. .
					. .						. .

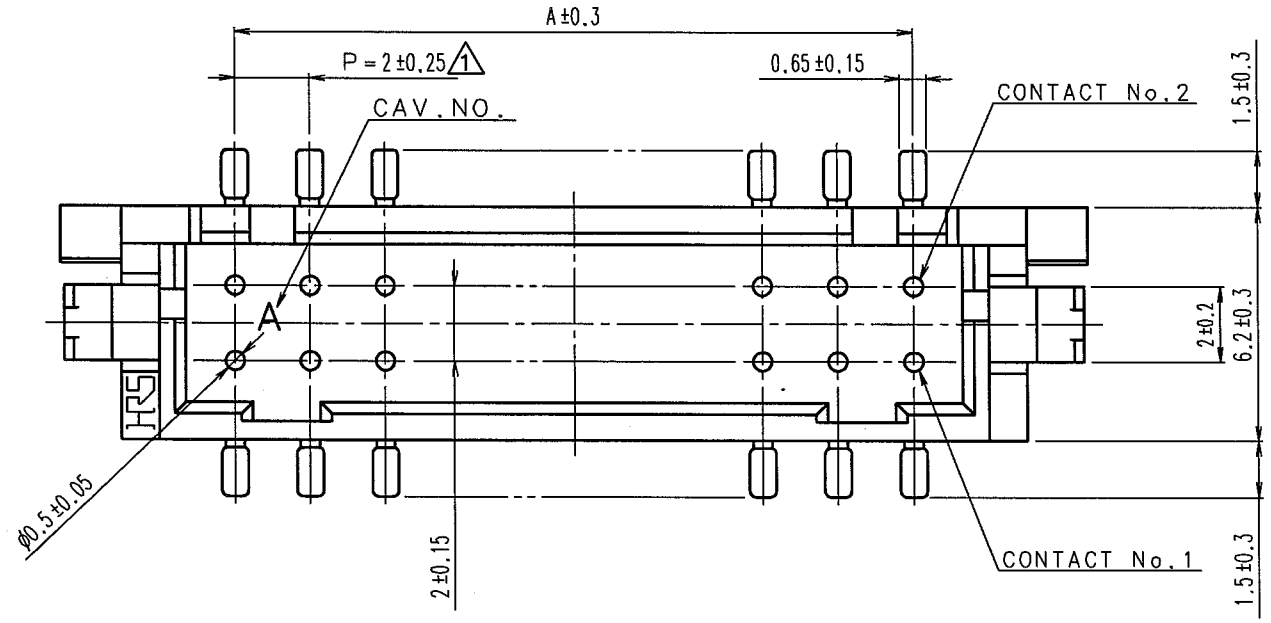

PART NO.	HRS NO.	NUMBER OF CONTACT	A	B	C	D
DF11G- 4DP-2V(50)	CL543-0810-0-50	4	2.0	8.5	4.0	8.7
DF11G- 6DP-2V(50)	CL543-0811-2-50	6	4.0	10.5	6.0	10.7
DF11G- 8DP-2V(50)	CL543-0812-5-50	8	6.0	12.5	8.0	12.7
DF11G-10DP-2V(50)	CL543-0813-8-50	10	8.0	14.5	10.0	14.7
DF11G-12DP-2V(50)	CL543-0814-0-50	12	10.0	16.5	12.0	16.7
DF11G-14DP-2V(50)	CL543-0815-3-50	14	12.0	18.5	14.0	18.7
DF11G-16DP-2V(50)	CL543-0816-6-50	16	14.0	20.5	16.0	20.7
DF11G-18DP-2V(50)	CL543-0817-9-50	18	16.0	22.5	18.0	22.7
DF11G-20DP-2V(50)	CL543-0818-1-50	20	18.0	24.5	20.0	24.7
DF11G-22DP-2V(50)	CL543-0819-4-50	22	20.0	26.5	22.0	26.7
DF11G-24DP-2V(50)	CL543-0820-3-50	24	22.0	28.5	24.0	28.7
DF11G-26DP-2V(50)	CL543-0821-6-50	26	24.0	30.5	26.0	30.7
DF11G-28DP-2V(50)	CL543-0822-9-50	28	26.0	32.5	28.0	32.7
DF11G-30DP-2V(50)	CL543-0823-1-50	30	28.0	34.5	30.0	34.7
DF11G-32DP-2V(50)	CL543-0824-4-50	32	30.0	36.5	32.0	36.7
DF11G-40DP-2V(50)	CL543-0825-7-50	40	38.0	44.5	40.0	44.7

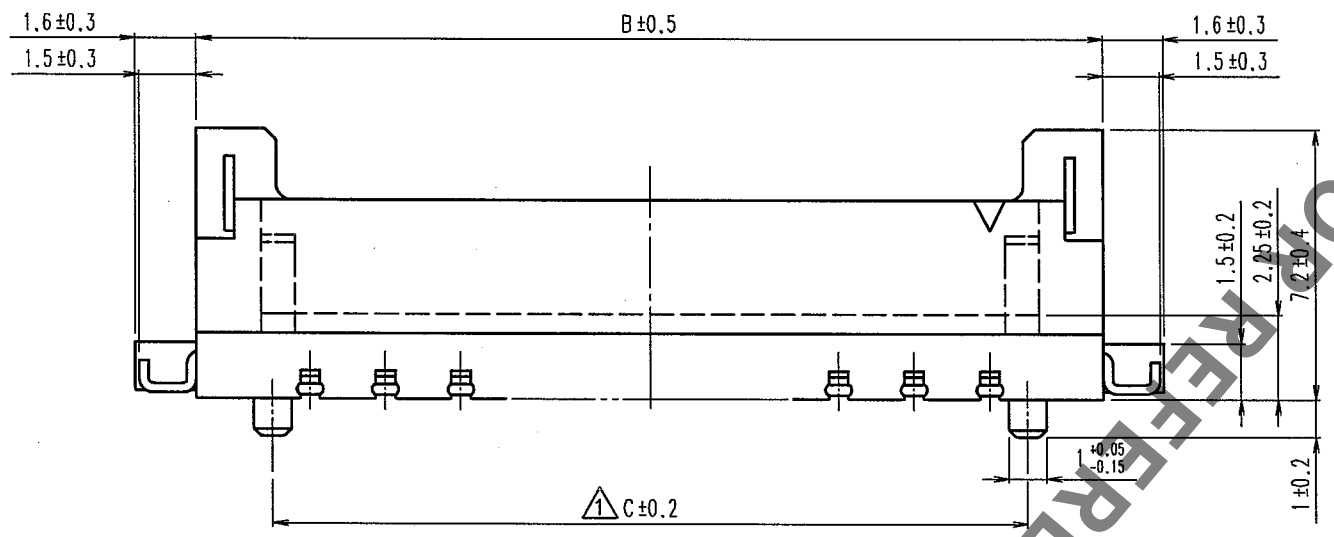

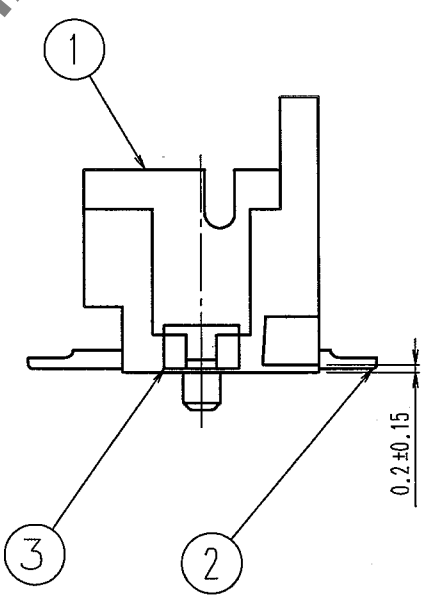

RECOMMENDED PATTERN

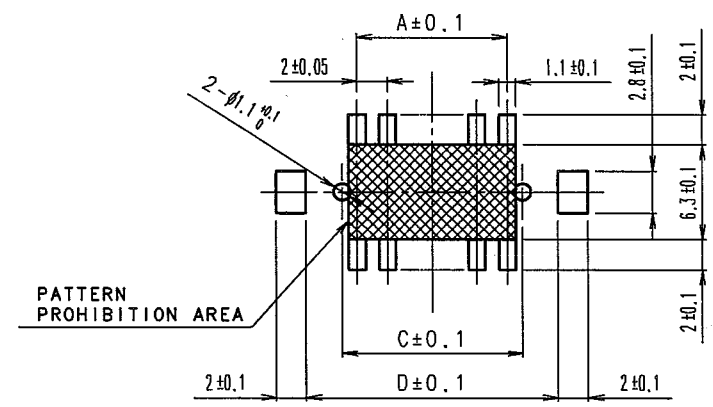

1 NOTES 1 :LEAD CO-PLANARITY INCLUDE REINFORCED METAL FITTINGS SHALL BE 0.1mm.

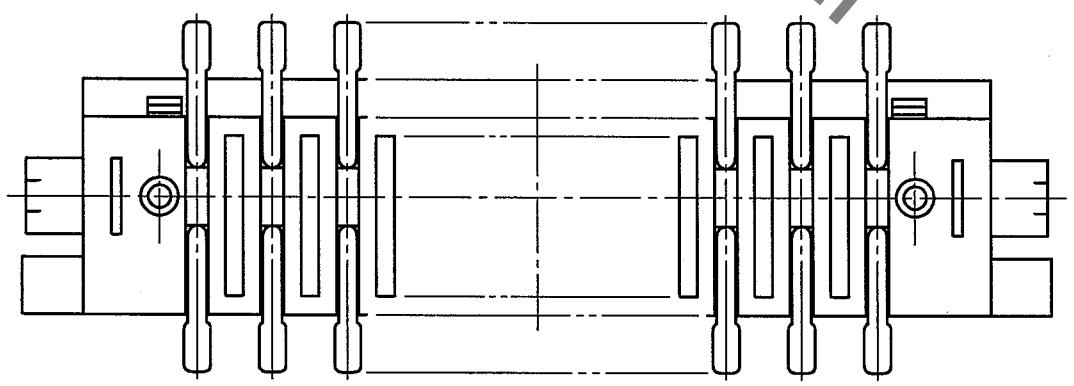

NO.	MATERIAL	FINISH, REMARKS	NO.	MATERIAL	FINISH, REMARKS
2	BRASS	SURFACE:GOLD PLATED 0.2μm min UNDER PLATING:NICKEL 1μm min	5	ELASTMER 1	STOPPER(GRAY)
			4	PS 1	ELECTROSTATIC PROTECTION(CLEAR)
1	POLYAMIDE	UL94V-0(BEIGE)	3	BRASS	SURFACE:TIN PLATED 1μm min

CODE NO.(OLD)	DRAWN	DESIGNED	CHECKED	APPROVED	RELEASED
CL	T.MIYAZAKI	T.MIYAZAKI	K.KATAYOSE	M.YAMAMOTO	
	98. 1. 7	98. 1. 7	98. 1. 8	98. 1. 8	

SCALE 5 : 1
UNITS mm

DRAWING NO. EDC3-162244-03

HRS HIROSE ELECTRIC CO.,LTD.

PART NO. DF11G-*DP-2V(50)

CODE NO. CL543

1/2

FORM NO.229

TO

HRS DRAWING FOR REFERENCE

Oct.1.2019 Copyright 2019 HIROSE ELECTRIC CO., LTD. All Rights Reserved.
In case of consideration for using Automotive equipment / device which demand high reliability, kindly contact our sales window correspondents.

	COUNT	DESCRIPTION OF REVISIONS	BY	CHKD	DATE		COUNT	DESCRIPTION OF REVISIONS	BY	CHKD	DATE
△					. .	△					. .
△					. .	△					. .
△					. .	△					. .

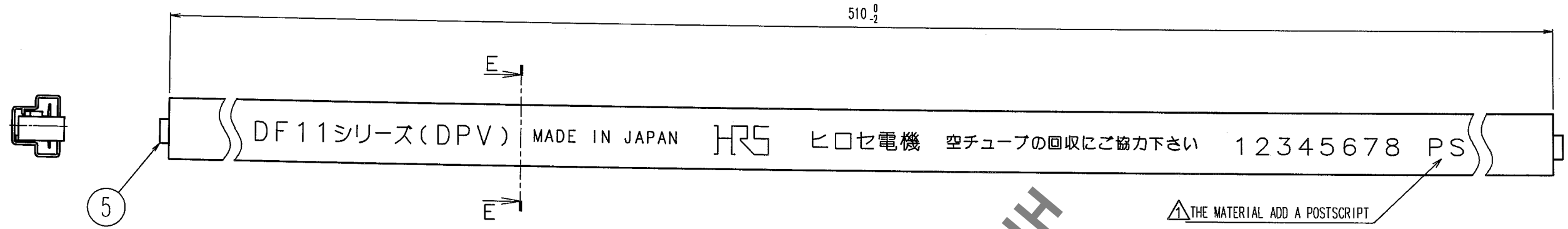

NOTES 2. NUMBER OF CONNECTORS PER A MAGAZINECASE SHALL BE IN ACCORDANCE WITH THE LIST BELOW.

3. THE MINIMUM UNIT OF ORDER SHALL BE IN ACCORDANCE WITH THE NUMBER OF CONNECTORS ON THE LIST BELOW.

E-E(10:1)

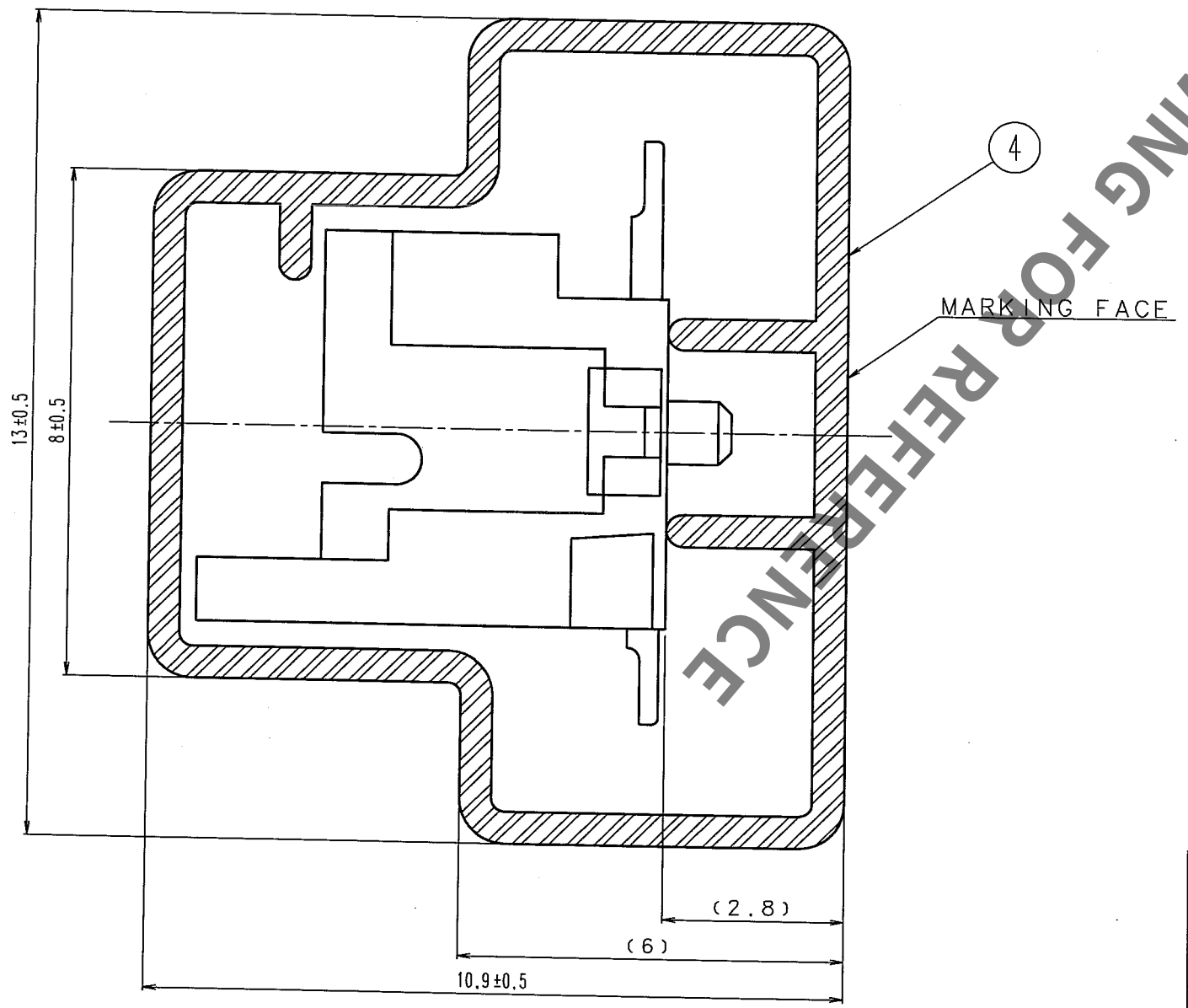

PART NO.	HRS NO.	NUMBER OF CONNECTORS
DF11G- 4DP-2V(50)	CL543-0810-0-50	41
DF11G- 6DP-2V(50)	CL543-0811-2-50	35
DF11G- 8DP-2V(50)	CL543-0812-5-50	30
DF11G-10DP-2V(50)	CL543-0813-8-50	27
DF11G-12DP-2V(50)	CL543-0814-0-50	24
DF11G-14DP-2V(50)	CL543-0815-3-50	22
DF11G-16DP-2V(50)	CL543-0816-6-50	20
DF11G-18DP-2V(50)	CL543-0817-9-50	18
DF11G-20DP-2V(50)	CL543-0818-1-50	17
DF11G-22DP-2V(50)	CL543-0819-4-50	16
DF11G-24DP-2V(50)	CL543-0820-3-50	15
DF11G-26DP-2V(50)	CL543-0821-6-50	14
DF11G-28DP-2V(50)	CL543-0822-9-50	13
DF11G-30DP-2V(50)	CL543-0823-1-50	12
DF11G-32DP-2V(50)	CL543-0824-4-50	12
DF11G-40DP-2V(50)	CL543-0825-7-50	10

HRS DRAWING FOR REFERENCE

TO

CODE NO.(OLD)	DRAWN	DESIGNED	CHECKED	APPROVED	RELEASED
CL	T.MIYAZAKI 98. 1. 7	T.MIYAZAKI 98. 1. 7	K.KATAYOSE 98. 1. 8	M.YAMAMOTO 98. 1. 8	

SCALE FREE
UNITS mm

DRAWING NO. EDC3-162244-03

HRS HIROSE ELECTRIC CO.,LTD.

PART NO. DF11G-*DP-2V(50)

CODE NO. CL543

2/

FORM NO.229 NC