Sep.1.2016 Copyright 2016 HIROSE ELECTRIC CO., LTD. All Rights Reserved.

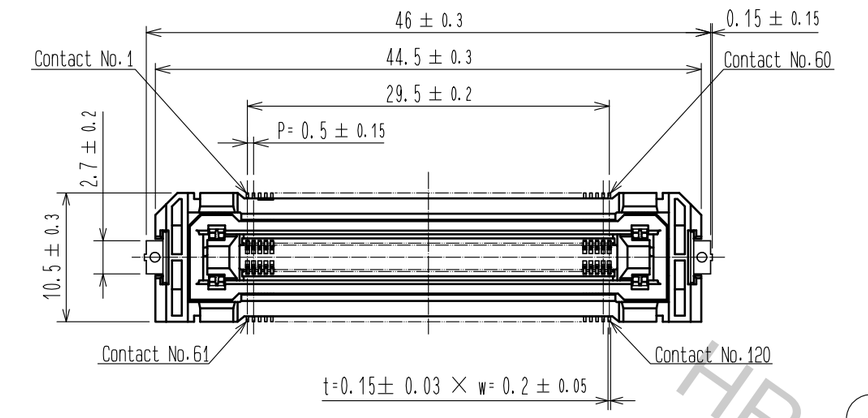

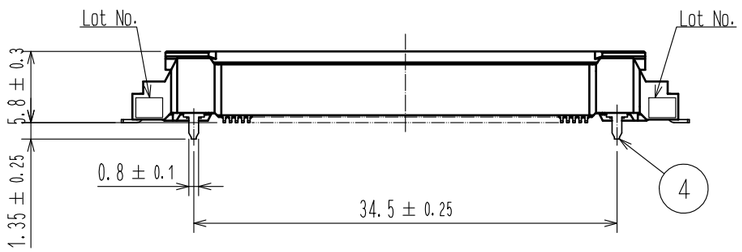

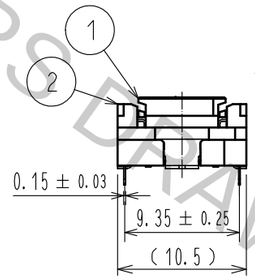

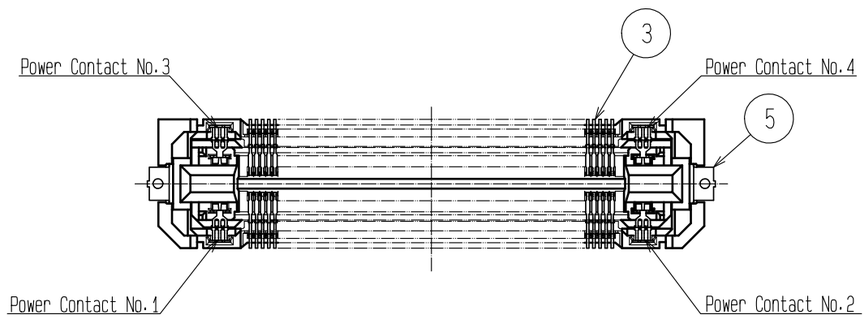

RECOMMENDED LAND PATTERN DIMENSION OF PCB
(PCB THICKNESS:t=1.6mm)

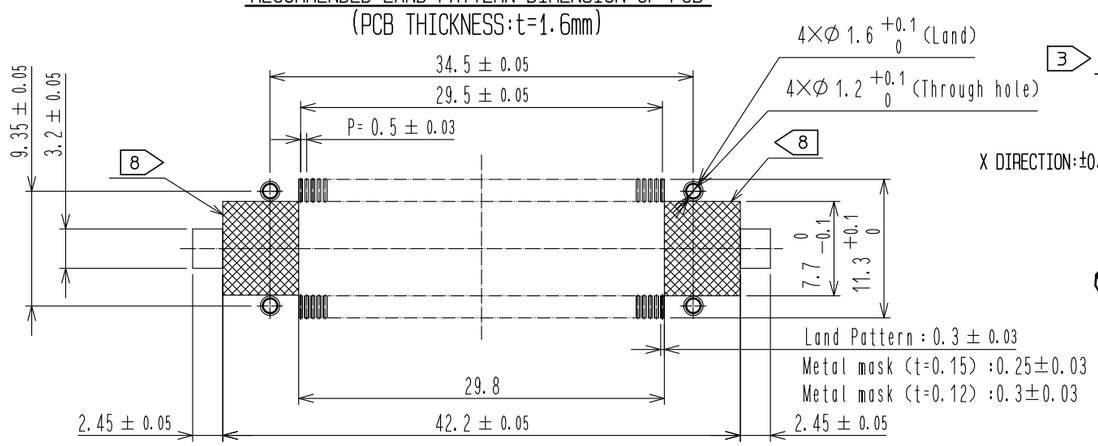

3 FLOATING RANGE

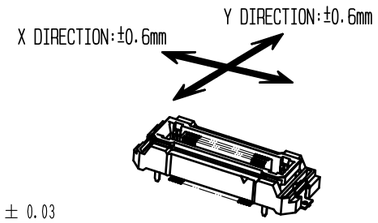

7 PCB DISTANCE (No scale)

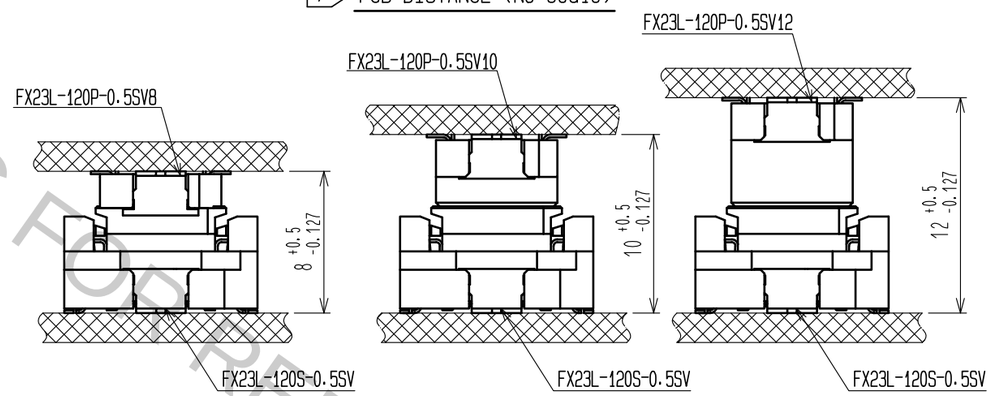

Note
1 Lead CO-Planarity is 0.1mm MAX.
2 This is packaged in tray.(50pcs/tray)
3 Floating range of this connector is ±0.6mm MAX.
⚠1 The maximum cycle time of the floating operation is in accordance with the mating cycle of the connector.
4 It shows the vacuum pickup area. Remove the mylar tape before mating connectors.
5 Blemish and hit mark can be occured through out the manufacturing process which doesn't affect quality level.
6 The dimensions in parentheses are for references.
7 Please use the connectors within the specified PCB distance.
8 ▩ area of inner SMT land requires pattern prohibition or resist treatment to prevent the pattern.

2 DRAWING FOR PACKING (No scale)

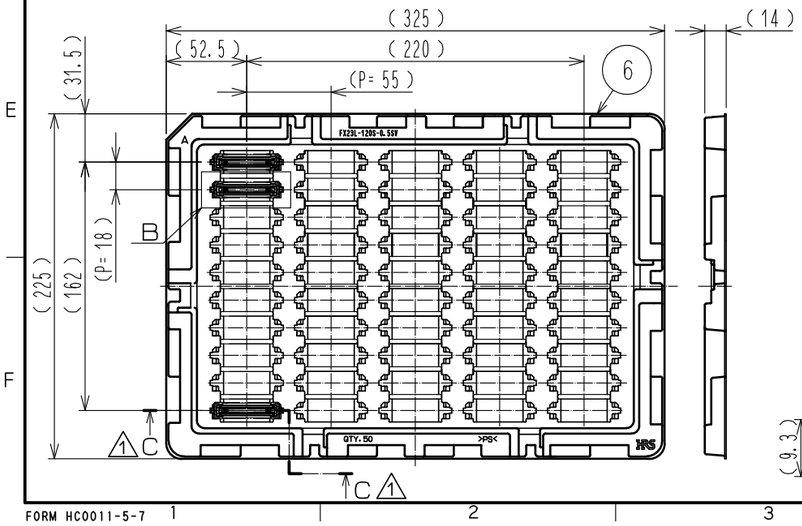

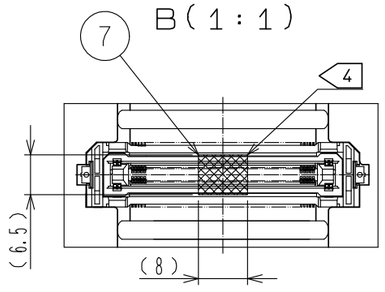

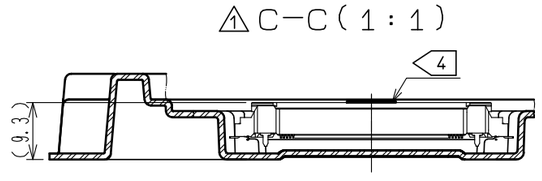

NO.	MATERIAL	FINISH , REMARKS	NO.	MATERIAL	FINISH , REMARKS
3	COPPER ALLOY	CONTACT AREA:GOLD 0.1μm	7	POLYAMIDE	(TAPE FOR VACUUM PICKUP)
		LEAD AREA:GOLD 0.03μm	6	POLYSTYRENE	(TRAY)
		UNDER PLATING:NICKEL 1.3μm	5	BRASS	TIN-PLATING 1μm
2	POLYAMIDE	BLACK UL94V-0	4	COPPER ALLOY	CONTACT AREA:GOLD 0.1μm
1	POLYAMIDE	BLACK UL94V-0			LEAD AREA:TIN-PLATING 1μm
					UNDER PLATING:NICKEL 1.3μm

UNITS	SCALE		COUNT	DESCRIPTION OF REVISIONS	DESIGNED	CHECKED	DATE
mm	2 : 1	⚠1	4	DIS-F-00000834	TS.OONO	KN.SHIBUYA	15.11.10

HRS HIROSE ELECTRIC CO., LTD.

APPROVED	: HS.OKAWA	15.05.12	DRAWING NO.	EDC3-358069-00
CHECKED	: KN.SHIBUYA	15.05.12	PART NO.	FX23L-120S-0.5SV
DESIGNED	: TS.OONO	15.05.12	CODE NO.	CL573-2306-2-00 ⚠1 1/1
DRAWN	: Wonsuk.Yoon	15.05.11		

HRS DRAWING FOR REFERENCE