450-001
Qwik-Ty® Strain Relief - Connector Designator L
Rotatable Coupling (Straight, 45° and 90° Elbows)

CONNECTOR DESIGNATOR

L

450 L S 001 M 16 G

- Product Series
- Connector Designator
- Angle and Profile
  - A = 90°
  - B = 45°
  - S = Straight
- Basic Part Number
- Finish (Table II)
- Shell Size (Table I)
- Ground Lug (Omit for none)

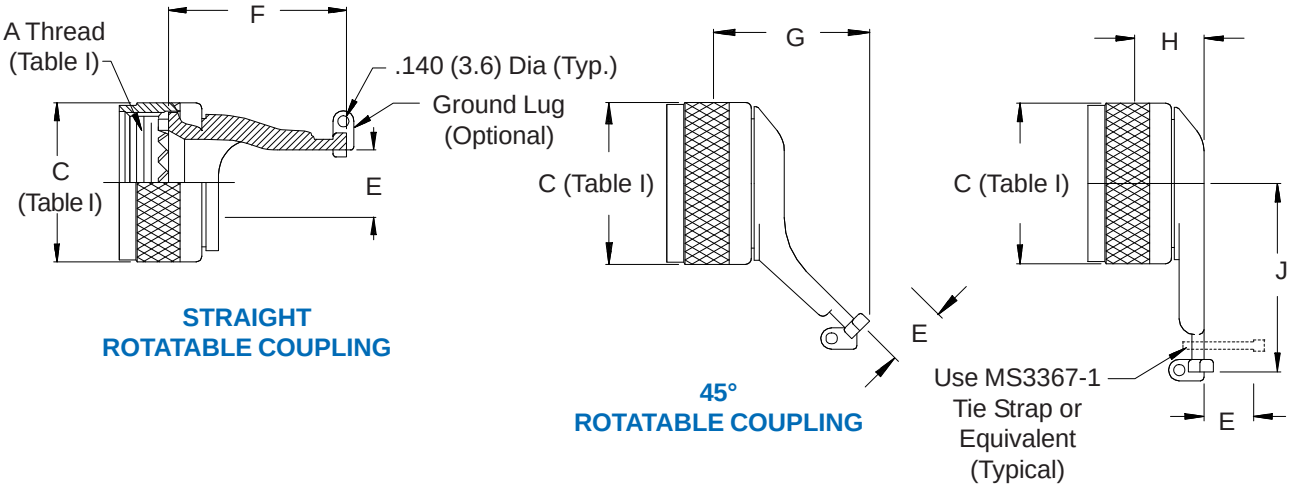

STRAIGHT ROTATABLE COUPLING

45° ROTATABLE COUPLING

90° ROTATABLE COUPLING

See inside back cover fold-out or pages 13 and 14 for Tables I and II.

TABLE III: DIMENSIONS

Shell Size	E Cable Entry		F Max		G Max		H Max		J Max	
08	.269	(6.8)	.866	(22.0)	1.066	(27.1)	.464	(11.8)	.890	(22.6)
10	.397	(10.1)	.866	(22.0)	1.066	(27.1)	.496	(12.6)	.950	(24.1)
12	.511	(13.0)	.926	(23.5)	1.066	(27.1)	.535	(13.6)	1.070	(27.2)
14	.636	(16.2)	1.106	(28.1)	1.188	(30.2)	.574	(14.6)	1.330	(33.8)
16	.761	(19.3)	1.106	(28.1)	1.224	(31.1)	.590	(15.0)	1.390	(35.3)
18	.850	(21.6)	1.176	(29.9)	1.224	(31.1)	.685	(17.4)	1.480	(37.6)
20	.975	(24.8)	1.306	(33.2)	1.224	(31.1)	.685	(17.4)	1.660	(42.2)
22	1.100	(27.9)	1.426	(36.2)	1.224	(31.1)	.716	(18.2)	1.850	(47.0)
24	1.225	(31.1)	1.556	(39.5)	1.224	(31.1)	.755	(19.2)	1.910	(48.5)

1. Cable Entry is defined as the accommodation entry for the wire bundle or cable. Dimensions are not intended for inspection criteria.
2. Metric dimensions (mm) are indicated in parentheses.

© 2005 Glenair, Inc. CAGE Code 06324 Printed in U.S.A.