Glenair®





AS39029 QPL and Glenair Commercial

High-Performance Connector Contacts



United States ▪ United Kingdom ▪ Germany ▪ France ▪ Nordic ▪ Italy ▪ Spain ▪ Japan

First Edition • January 2011

Aircraft On Ground?

Need Contacts Now?

AS39029 In Stock (Specials Too!)



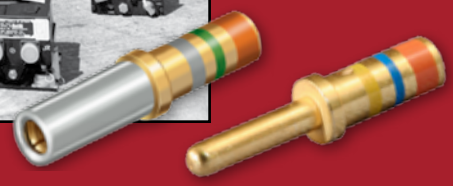

Glenair®

1211 Air Way
Glendale, California 91201-2497
Telephone: 818-247-6000 · Facsimile: 818-500-9912 · E-mail: sales@glenair.com

United States · United Kingdom · Germany · Nordic · France · Italy · Spain · Japan

www.glenair.com

SAE-AS39029 QPL and Commercial Contacts and Accessories

Glenair®

Intro **Introduction**
Complete Overview of Qualified and Commercial Contacts

A **AS39029 Crimp Contacts**
M39029 Contact Selection Guide
Electrical Pin and Socket Crimp Contacts



B **High Performance Shielded Contacts**
Shielded Contact Cross Reference
Coaxial
Twinax
Quadrax
Other Shielded Contacts



C **Fiber Optic Termini**
MIL-PRF-29504 for D38999
MIL-PRF-28876
Series 80 Mighty Mouse
Special Size #16 COTS Front Release
ARINC Type
Glenair High Density (GHD)
GFOCA
Next Generation NGCON

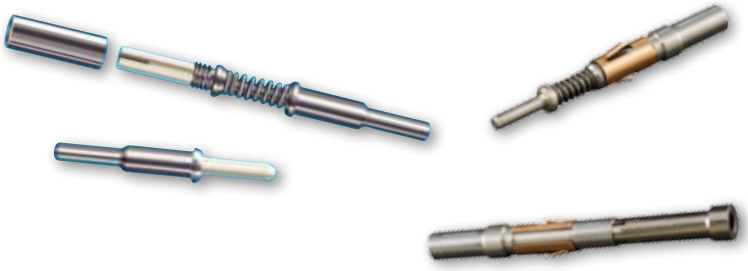

D **Special Purpose Contacts**
Series 80 Mighty Mouse #23 Contacts
High Power Contacts
Sealing Plugs
Pneumatic Contacts
Thermocouple Contacts
PC Tail Contacts

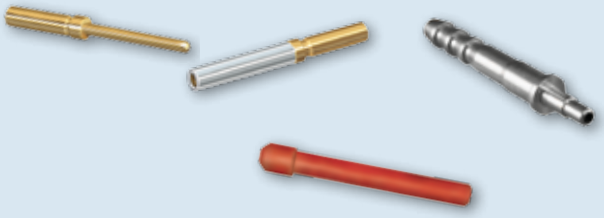

E **Tools and Accessories**
Insertion and Extraction Tools
Crimp Tools



Index **Index**
Part Number Index



© 2011 Glenair, Inc.

CAGE Code 06324

Printed in U.S.A.

GLENAIR, INC. • 1211 AIR WAY • GLENDALE, CA 91201-2497 • 818-247-6000 • FAX 818-500-9912

www.glenair.com

E-Mail: sales@glenair.com

Introduction to Crimp Contacts
SAE-AS39029

Glenair brings a new perspective to the supply of high-performance Mil-Spec and commercial contacts: High Availability! Whether you need a standard duty socket for a MIL-DTL-28840 connector or an extended duty pin for MIL-DTL-38999 Series III, we have you covered with products that are always in stock—with no dollar or quantity minimums. In addition to the broadest selection and availability, Glenair also delivers outstanding interconnection compatibility. Glenair QPL SAE-AS39029 as well as our proprietary contact series are guaranteed to mate properly and perform at the upper limits of application requirements.

About SAE AS39029 Crimp Contacts

In a marketplace saturated with specialty interconnection media, the SAE-AS39029 crimp contact is still the "bread and butter" of the circular connector world. Serving platforms like the D38999, M28840 and countless others, AS39029 crimp contacts continue to offer reliable power and signal transmission in ruggedized applications. A myriad of sizes, termination options and materials mean that end users don't have to compromise performance or reliability.

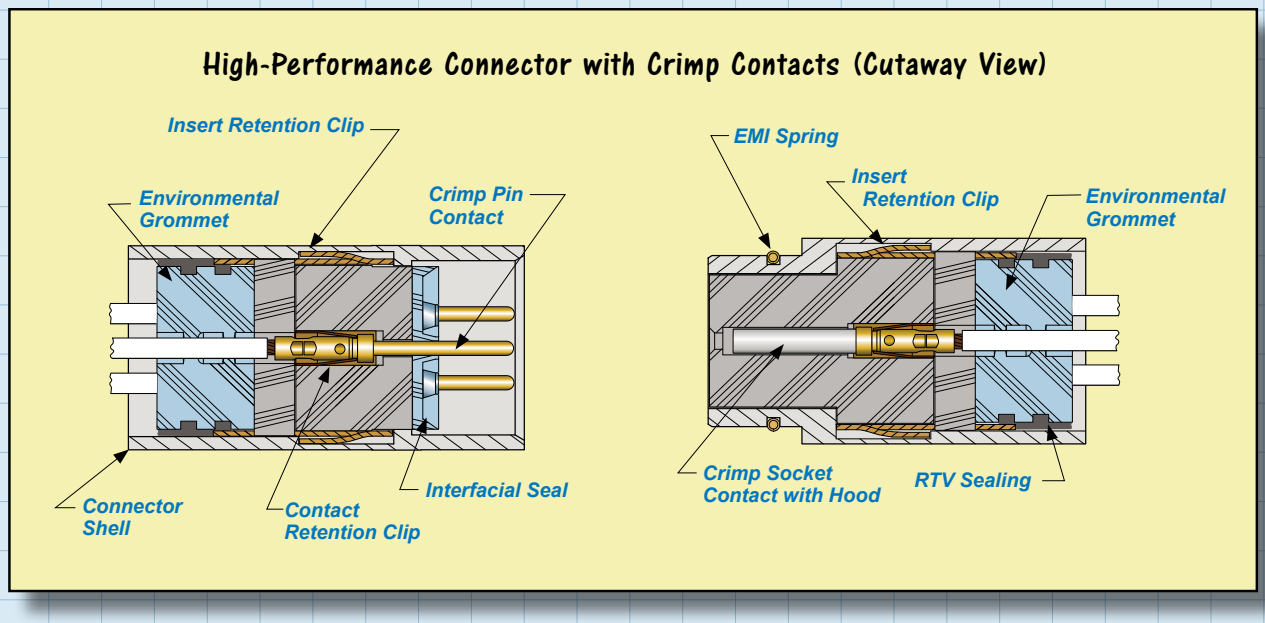

Crimping results in a gas tight connection between the wire and its terminal. Although there are certainly alternatives to crimping, such as ultrasonic welding, resistance welding, insulation displacement technologies and so on, no other available technology delivers the short cycle times, flexibility and low overall cost of crimping—making it the termination technology of choice for most high-performance connector systems.

Crimp connectors are most commonly used to terminate stranded wire. Crimp-on terminals are attached by inserting the stripped end of the wire into the barrel end of the terminal, which is then mechanically deformed (crimped). Special crimp tools are a must, and are supplied with appropriate accessory attachments to ensure reliable terminations for every wire and contact combination. Military Specification MIL-DTL-22520 provides the aerospace/defense industry with a common set of rugged, reliable hand crimp tools. This specification controls the voltage drop and tensile strength of crimp terminations. Daniels Manufacturing Corporation is the leading manufacturer of these tools.

The AS39029 product series supplied by Glenair includes all the most popular standard and extended duty pin and socket contacts for use in high-performance circular and rectangular multi-pin connectors. We are also well positioned to supply special-purpose contacts to meet unique application requirements.

© 2011 Glenair, Inc.
CAGE Code 06324
Printed in U.S.A.

About High Performance Shielded Contacts

Glenair shielded contacts are fabricated from the best available materials and manufacturing processes. Conductive elements are gold-plated copper alloy. Dielectrics are high-performance fluorocarbon. When applicable, contacts are approved to SAE AS39029.

Shielded Coaxial Contacts

Shielded coaxial contacts have a special role in the interconnect system and are designed for use in a wide range military and aerospace connectors that service analog radio frequency or microwave applications. Most Glenair cylindrical connectors, including MIL-DTL-38999, can accomodate shielded coaxial contacts. Rectangular connector packages, such as our high-performance HiPer-D are also ideally suited for shielded high frequency contacts. Glenair coaxial contacts are specified according to size, cable choice and impedance. The contacts are easily incorporated into standard 8, 12 and 16 size contact cavities, enabling users to interchange high-frequency contacts into connector insert arrangements originally designed for power or signal contacts. Special 50 Ohm matched impedance contacts are also available. Various grades of coaxial cables can be supplied directly by Glenair, or other commercial suppliers.

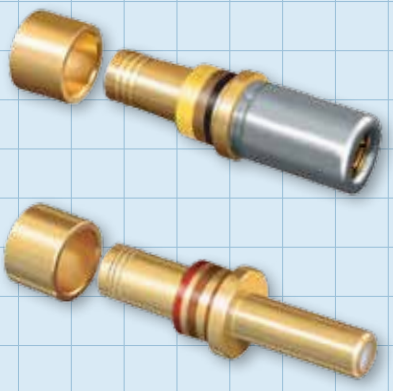



Quadrax

A Quadrax contact is really a "connector within a connector." These unique high-speed contacts house four discrete size 24 pin or socket contacts within each keyed size 8 crimp body. Two sets of twisted pair wires terminate to the size 24 contacts, while the overall shield is grounded via the outer size 8 shell—affording 360° shielding. These high speed contacts have outstanding EMI compatibility for high data transfer digital applications where little or no power is needed. Standard crimping tools can be used to terminate all components, making shop or field assembly fast and simple.

Shielded Concentric Twinax

These contacts are designed for high-speed twisted pair applications that count on reliable shielding and contact durability. The concentric twinax cartridge is designed for easy crimp termination of twisted pair cable and shielding, and are designed specifically for use in MIL-DTL-38999 connectors. Unlike standard twinax designs, Glenair concentric twinax contacts deliver outstanding shield integrity from the conductor through the connector and do not require contact polarization within the insert. Glenair size #8 concentric twinax contacts feature a hooded socket and hardened plating for outstanding durability. Pin contacts are chamfered for easy and reliable mating. Termination is supported with easy to follow crimp instructions. Assembly tooling is available for these and all Glenair contacts.

© 2011 Glenair, Inc.

Introduction to Crimp Contacts
Fiber Optic Termini

About Fiber Optic Contacts

Today, the use of fiber optic systems to carry digitized video, voice and data is universal. High-performance fiber optic interconnect technologies, combined with satellite and other broadcast media, enable high-speed specialized applications in avionics, robotics, weapon systems, sensors, space and other high performance environments. Highly engineered fiber optic contacts, or termini, are the key to delivering low data loss and reliable, repeatable performance in fiber optic connection systems.

Fiber Optic Interconnect Termini

Fiber optic connectors are designed to be connected and disconnected many times without affecting the optical performance of the fiber circuit. Connectors can be thought of as transition devices which make it possible to divide fiber optic networks into interconnected subsystems and to facilitate the attachment of individual branches of the system to a transmitter, receiver or another fiber. The MIL-DTL-38999 connector is currently the most commonly specified multi-pin cylindrical interconnect in both fiber and copper conductor aerospace applications. When used to connect multiple strands of fiber simultaneously, the D38999 connector functions as a container or shell for the precision termini which perform the actual marriage of the fiber strands.

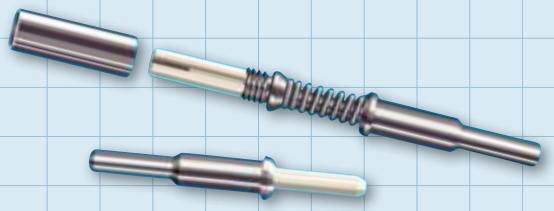

Over the past two decades there have been dramatic tolerance improvements in terminus design to ensure precise, repeatable, axial and angular alignment between pin and socket termini within the connector shell. Ferrule design, critical to the performance of the termini, has traditionally relied on a machined stainless steel ferrule incorporating a precision micro-drilled hole.

Glenair's fiber optic termini for D38999 Series III connectors are qualified to MIL-PRF-29504/4 and /5 requirements. Unique precision ceramic ferrules, with concentricity and diametric tolerances controlled within a micron (.00004 of an inch), meet the needs of high bandwidth and low allowable insertion loss applications. Glenair's ferrules are approximately 10 times more accurate than alternative designs, and have reduced insertion loss values from 1.5dB to less than .5dB. These products are ideally suited for aerospace applications.

Glenair has also manufactured and qualified fiber optic interconnection systems for other branches of the military, including those used in mission-critical ground, sea and space applications. Contact termini for these fiber optic systems incorporate many of the latest technologies, including integrated retention clips, IPC polish keying, environmental sealing and more. Our single and multichannel fiber optic termini utilize the latest materials technology and are designed for use with Glenair's family of fiber optic connectors as well as third party products. From MIL-DTL-38999 to MIL-DTL-28876, Glenair has a fiber optic terminus for virtually every high-performance fiber optic system in use today and we are on the design and standards committees creating fiber optic interconnect solutions for tomorrow's mission-critical applications.

Fiber Optic Costs and Benefits

When evaluating the costs and benefits of moving to fiber, it is important to adopt both a short and long term view. In the short term, it is arguably less expensive to simply continue using copper cabling to meet an incremental expansion of data communication needs. This avoids the expense of adding the transmitters, converters, repeaters, connectors, termini, receivers and so on needed for integrating optical fiber into an existing electronic system. Taking the long view, investing in the conversion to fiber optics often makes good sense, especially given the performance benefits—EMI immunity, security, weight reduction, bandwidth, etc.—as well as cost of ownership factors such as reduced cable maintenance costs and ease of installation.

© 2011 Glenair, Inc.

Introduction to Crimp Contacts
Series 80 Mighty Mouse

About Our Series 80 Mighty Mouse Size #23 Crimp Contacts

Like all high-performance crimp contact systems, Series 80 Mighty Mouse contacts are terminated to wire using precision crimp tools, and are then snapped into place by hand or with a hand held insertion tool. Damaged or miswired contacts may be removed from the connector using special extraction tools. Although the connectors are supplied with a full complement of contacts, extra contacts are commonly purchased as spares or to use for quality assurance purposes, such as crimp tensile tests. Coaxial contacts are also typically ordered separately, as customers prefer to specify the exact performance values for these specialized shielded contacts.

Mighty Mouse contacts conform to the requirements of Aerospace Standard AS39029. This SAE specification defines the design, dimensions and performance of contacts used in aerospace grade electrical connectors. The "general specification" covers a variety of contacts including thermocouple, hermetic, coaxial and triaxial types. The "slash sheets" contain dimensions and other information for specific types of contacts. Each contact is assigned a Basic Identification Number (BIN), a non-significant three digit code corresponding to the color code on the contacts. Series 80 Size #23 and size #20HD contacts conform to AS39029 requirements, but are not covered by a slash sheet. Size #20, #16 and size #12 contacts are standard AS39029 contacts.

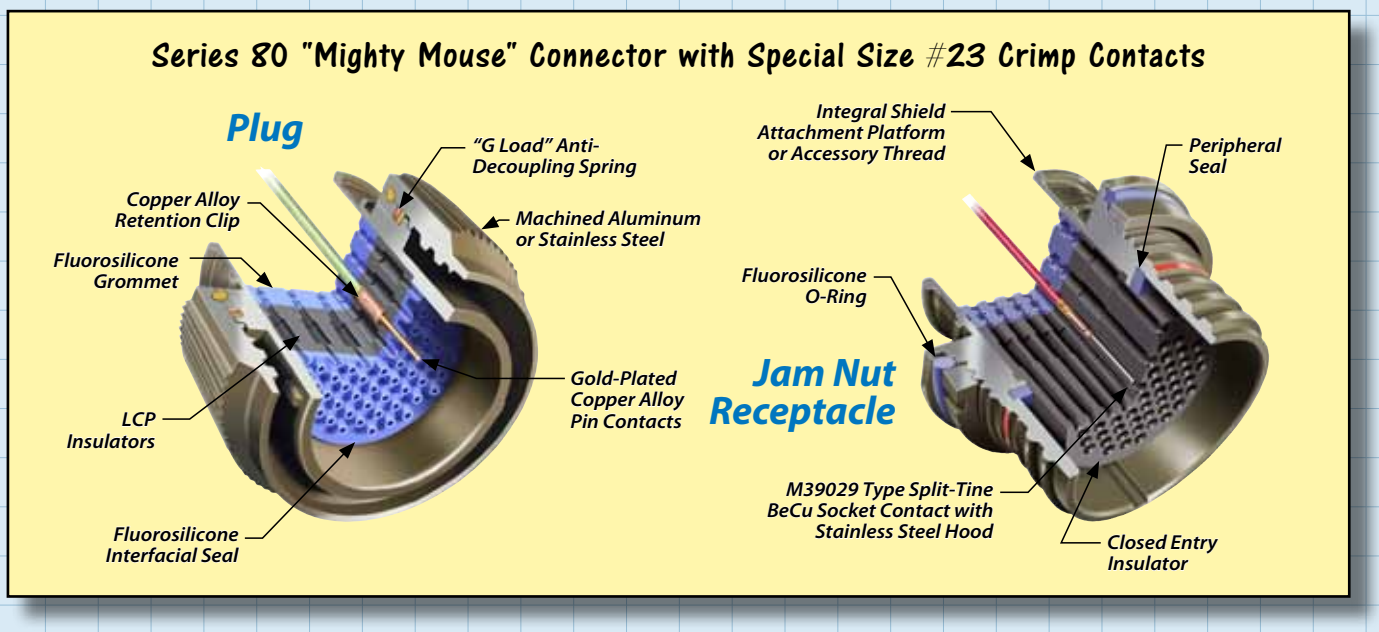

About Thermocouple and Other Special Purpose Contacts

Glenair produces a wide range of special purpose contacts including high power and high ampacity contacts, pneumatic contacts, PC Tail contacts for board terminations and thermocouple contacts for use in temperature measuring applications. We also produce all the small accessory items, such as sealing plugs, that make us a convenient one-stop-shopping destination for users of high-performance Mil-Spec and commercial connectors and contacts.

We invite our customers to take advantage of the breadth and depth of our contact product line, especially in terms of its high-availability and our willingness to engineer unique and special-purpose contact solutions for virtually any interconnect challenge.

© 2011 Glenair, Inc.

Connector and Contact Glossary of Useful Terms

Barrel - (Conductor Barrel) - The section of the terminal, splice or contact that accommodates the stripped conductor.

BIN (Basic Identification Number) - color bands on the crimp barrel of a contact to identify contact part number. Each BIN code corresponds to only one slash sheet, thus identifying the complete M39029/XX- part number.

Closed entry - A contact or contact cavity design in the insert or body of the connector which limits the size or position of the mating contact or printed circuit board to a predetermined dimension.

Coaxial contact - A contact having two conducting surfaces, a center contact and a coaxially placed sleeve

Contact - The conductive element in a connector that makes actual contact, for the purpose of transferring electrical energy.

Contact area - The area in contact between two conductors, two contacts, or a conductor and a contact permitting the flow of electricity.

Contact arrangement - The number, spacing and arrangement of contacts in a connector.

Contact resistance - Electrical resistance of a pair of engaged contacts. Resistance may be measured in ohms or millivolt drop at a specified current over the engaged contacts.

Contact retainer - A device either on the contact or in the insert to retain the contact in an insert or body.

Contact retention - The axial load in either direction which a contact can withstand without being dislodged from its normal position within an insert or body.

Contact size - An assigned number denoting the size of the contact engaging end.

Contact shoulder - The flanged portion of a contact which limits its travel into the insert.

Crimp - The physical compression (deformation) of a contact barrel around a conductor in order to make an electrical connection.

Crimp contact - A contact, pin or socket, whose back portion (wire barrel) is a hollow cylinder into which a stripped wire (conductor) is inserted. The sidewalls of the wire barrel are then mechanically compressed (uniformly deformed) using a crimping tool to captivate the conductor.

Crimping dies - Portion of the crimping tool that shapes the crimp.

Crimping tool - Mechanism used for crimping.

Depth of Crimp - The distance the indenter penetrates into the barrel.

Die Closure - The gap between indenter dies at full handle closure. Usually defined by Go/No-Go dimensions.

Indenter - That part of a crimping die, usually the moving part, which indents or compresses the contact barrel.

Inspection hole - A hole placed at the bottom end of a contact wire barrel to permit visual inspection to see that the conductor has been inserted to the proper depth in the barrel prior to crimping.

Installing tool - A device used to install contacts into a connector. A device used to install taper pins into taper pin receptacles.

Locator - Device for positioning terminals, splices, or contacts into crimping dies, positioner, or turret heads.

Milivolt drop test - A test designed to determine the voltage loss due to resistance of a crimped joint.

Pin contact - A contact having an engagement end that enters the socket contact.

© 2011 Glenair, Inc.

Connector and Contact Glossary of Useful Terms

Plating - The overlaying of a thin coating of metal on metallic components to improve conductivity, provide for easy soldering or prevent rusting or corrosion.

Positioner - A device when attached to a crimping tool locates the contact in the correct position.

Power contact - Type of contact used in multi-contact connectors to support the flow of rated current.

Pull-out force - Force necessary to separate a conductor from a contact or terminal, or a contact from a connector, by exerting a tensile pull.

Radio frequency contact (RF contact) - An impedance matched shielded contact.

Range, wire - The sizes of conductors accommodated by a particular barrel. Also the diameters of wires accommodated by a sealing grommet.

Removal tool - A device used to remove a contact from a connector. A device used to remove a taper pin from a taper pin receptacle.

Sealing plug - A plug which is inserted to fill an unoccupied contact aperture in a connector insert. Its function is to seal all unoccupied apertures in the insert, especially in environmental connectors.

Shielded contact - A contact which carries alternating current and is shielded from unwanted signals (RFI and EMI).

Socket contact - A contact having an engagement end that will accept entry of a pin contact.

Solderless connection - The joining of two metals by pressure means without the use of solder, braze, or any method requiring heat.

Strip - To remove insulation from a conductor. (See details elsewhere in technical section of this cat.)

Thermocouple contact - Contact of special material used in connectors employed in thermocouple applications. Material often used are iron, constantan, copper, chromel, alumel and others.

Turret Head - A device that contains more than one locator which can be indexed by rotating a circular barrel, and when attached to a crimping tool, positions the contact.



© 2011 Glenair, Inc.

Tired of Cooling Your Heels?

Glenair Rapid-Response Contact Manufacturing and Same-Day Stocking Saves You Time, Money and Hassle





Glenair®

1211 Air Way
Glendale, California 91201-2497
Telephone: 818-247-6000 · Facsimile: 818-500-9912 · E-mail: sales@glenair.com

United States · United Kingdom · Germany · Nordic · France · Italy · Spain · Japan

www.glenair.com

SAE-AS39029 QPL

High Performance Pin and Socket Crimp Contacts

Outstanding Product Availability

Glenair brings a new perspective to the supply of Mil-Spec crimp contacts: *High Availability!* Whether you need a standard duty socket for a MIL-DTL-28840 connector or an extended duty pin for MIL-DTL-38999 Series III we have got you covered with products that are always in stock—with no dollar or quantity minimums.

In addition to the broadest selection and availability, Glenair also delivers outstanding interconnection compatibility. Glenair QPL SAE-AS39029 contacts are guaranteed to mate properly and perform at the upper limits of application and specification requirements.

Errata

Catalog contents—including part numbers, materials and dimensions—are accurate to the best of our ability when we go to print. When errors or mistakes are brought to our attention, corrected content is posted immediately to www.glenair.com.

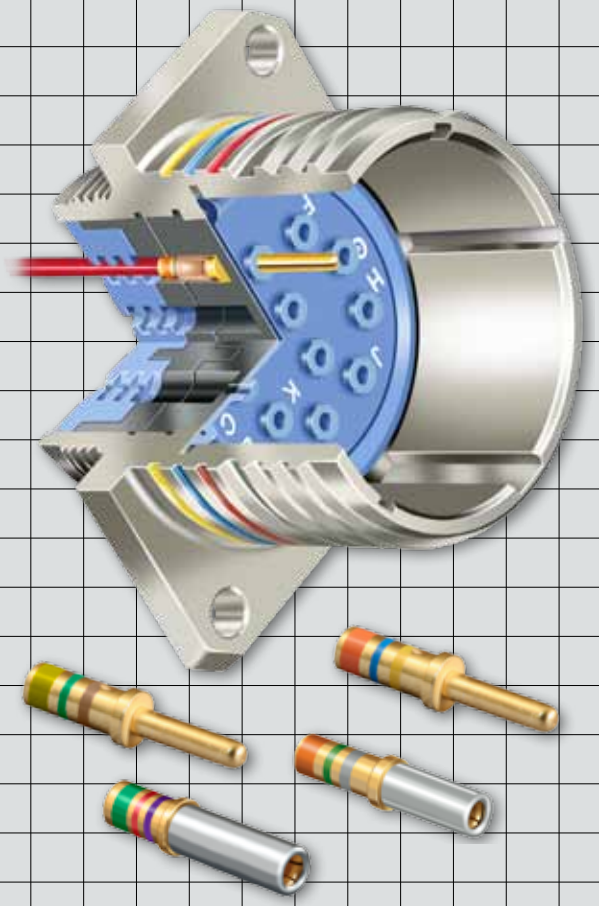

- **Qualified to SAE-AS39029 on Dozens of Contacts—and Growing!**
- **Same Day Inventory on Popular and Hard-to-Find Styles**
- **Highest Quality Materials Including Enhanced Durability Plating**
- **Fully Intermatable with Equivalent AS39029 QPL Contacts**

© 2011 Glenair, Inc.

Glenair®

SAE-AS39029
Crimp Contact Selection Guide

Military Part Number	Glenair Part Number	Contact Size	Wire Accommodation	Pin / Socket	BIN Color Striping			Product Page
M39029/56-348	850-001-22-348	22	22-28 AWG	Socket	Orange	Yellow	Grey	A-6
M39029/56-351	850-001-20-351	20	20-24 AWG	Socket	Orange	Green	Brown	
M39029/56-352	850-001-16-352	16	16-20 AWG	Socket	Orange	Green	Red	
M39029/56-353	850-001-12-353	12	12-14 AWG	Socket	Orange	Green	Orange	
M39029/56-527	850-001-10-527	10	10 AWG	Socket	Green	Red	Violet	
M39029/57-354	850-003-22-354	22	22-28 AWG	Socket	Orange	Green	Yellow	A-8
M39029/57-357	850-003-20-357	20	20-24 AWG	Socket	Orange	Green	Violet	
M39029/57-358	850-003-16-358	16	16-20 AWG	Socket	Orange	Green	Grey	
M39029/57-359	850-003-12-359	12	12-14 AWG	Socket	Orange	Green	White	
M39029/58-360	850-002-22-360	22	22-28 AWG	Pin	Orange	Blue	Black	A-10
M39029/58-363	850-002-20-363	20	20-24 AWG	Pin	Orange	Blue	Orange	
M39029/58-364	850-002-16-364	16	16-20 AWG	Pin	Orange	Blue	Yellow	
M39029/58-365	850-002-12-365	12	12-14 AWG	Pin	Orange	Blue	Green	
M39029/58-528	850-002-10-528	10	10 AWG	Pin	Green	Red	Grey	
M39029/63-368	850-021-20-368	20	20-24 AWG	Socket	Orange	Blue	Grey	A-12
M39029/64-369	850-022-20-369	20	20-24 AWG	Pin	Orange	Blue	White	A-13

BIN Color Coding

0 BLACK	1 BROWN	2 RED	3 ORANGE	4 YELLOW	5 GREEN	6 BLUE	7 VIOLET	8 GREY	9 WHITE

© 2011 Glenair, Inc.

SAE-AS39029
Crimp Contact Selection Guide

Military Part Number	Glenair Part Number	Contact Size	Wire Accommodation	Pin / Socket	BIN Color Striping			Product Page
M39029/83-450	850-004-20-450	20	22-26 AWG	Pin	Yellow	Green	Black	A-14
M39029/83-451	850-004-20-451	20	28-32 AWG	Pin	Yellow	Green	Brown	
M39029/83-508	850-004-20-508	20	20-24 AWG	Pin	Green	Black	Grey	
M39029/84-452	850-005-20-452	20	22-26 AWG	Socket	Yellow	Green	Red	A-16
M39029/84-453	850-005-20-453	20	28-32 AWG	Socket	Yellow	Green	Orange	
M39029/84-509	850-005-20-509	20	20-24 AWG	Socket	Green	Black	White	
M39029/106-614	850-006-22-614	22	22-28 AWG	Socket	Blue	Brown	Yellow	A-18
M39029/106-615	850-006-20-615	20	20-24 AWG	Socket	Blue	Brown	Green	
M39029/106-616	850-006-16-616	16	16-20 AWG	Socket	Blue	Brown	Blue	
M39029/106-617	850-006-12-617	12	12-14 AWG	Socket	Blue	Brown	Violet	
M39029/106-618	850-006-10-618	10	10 AWG	Socket	Blue	Brown	Grey	
M39029/107-620	850-007-22-620	22	22-28 AWG	Pin	Blue	Red	Black	A-20
M39029/107-621	850-007-20-621	20	20-24 AWG	Pin	Blue	Black	Brown	
M39029/107-622	850-007-16-622	16	16-20 AWG	Pin	Blue	Red	Red	
M39029/107-623	850-007-12-623	12	12-14 AWG	Pin	Blue	Red	Orange	
M39029/107-624	850-007-10-624	10	10 AWG	Pin	Blue	Red	Yellow	

BIN Color Coding

0	1	2	3	4	5	6	7	8	9
BLACK	BROWN	RED	ORANGE	YELLOW	GREEN	BLUE	VIOLET	GREY	WHITE

© 2011 Glenair, Inc.

Contact Performance Specifications

Test	Performance Specifications
Current Rating	*(meets SAE-AS39029, paragraph 3.5.4.1)*

Contact Size	Maximum Amps *Crimp*
22D	5
20	7.5
16	13
12	23
10	33

Contact Millivolt Drop

Contact Size	Maximum Millivolt Drop *Crimp*
22D	73
20	55
16	49
12	42
10	33

Tensile Strength

Wire Size	Axial Load (Pounds)			
	Silver Tin-Plated Copper Wire		Nickel-Plated Copper Wire	
	Initial Condition Values	Thermal Condition Values	Initial Condition Values	Thermal Condition Values
0000	875	787.5	785	706.5
00	750	675.0	675	607.5
0	700	630.0	630	567.0
1	650	585.0	585	526.5
2	550	495.0	495	445.5
4	400	360.0	360	324.0
6	300	270.0	270	243.0
8	220	198.0	200	180.0
10	150	135.0	135	121.5

Wire Size	Axial Load (Pounds)			
	Silver Tin-Plated Copper Wire		Nickel-Plated Copper Wire	
	Initial Condition Values	Thermal Condition Values	Initial Condition Values	Thermal Condition Values
12	110	93.0	100	85.0
14	70	61.0	60	53.0
16	50	45	37	33
20	20	14	19	14.3
22	12	7.5	8	6.0
24	8	6	6	4.5
26	5	4.0	3	2.5
28	3	2.25	1	1.50
30	1.5	1.13	1.5	1.13

CONTACT MATERIALS AND SPECIFICATIONS

Component	Material	Notes
Pin Contact	Beryllium copper alloy per ASTM B197, 50 microinches gold plated per ASTM B488 Type II Code C Class 1,27 over nickel plate per QQ-N-290 Class 2, 30-150 microinches	Approved for Space Flight
Socket Contact	Beryllium copper alloy per ASTM B197, 50 microinches gold plated per ASTM B488 Type II Code C Class 1,27 over nickel plate per QQ-N-290 Class 2, 30-150 microinches.	Approved for Space Flight
Socket Contact Hood	Stainless steel, passivated per AMS-QQ-P-35	Approved for Space Flight

© 2011 Glenair, Inc.

Contact Performance Specifications

Test	Performance Specifications
Durability	*(meets SAE-AS39029, paragraph 3.5.9)* No electrical or mechanical defects after 500 cycles of engagement and disengagement
Contact Retention	*(meets MIL-DTL-38999, paragraph 3.23)* The axial displacement of the contact shall not exceed .012 inch (0.30 mm). No damage to contacts or inserts shall result.
Pin Engagement End	*(meets SAE-AS39029 paragraph 3.4.1)* Unless otherwise specified, the mating end of all contacts (except size 22 and smaller) shall be formed with an approximate spherical radius.
Permeability	*(meets SAE-AS39029, paragraph 3.5.1)* When tested as specified in paragraph 4.7.2, the relative magnetic permeability of the contact shall be no greater than 2.0.
Vibration	*(meets SAE-AS39029, paragraph 3.5.10)* When contacts are tested as specified in paragraph 4.7.11, there shall be no electrical discontinuity of 1 microsecond or greater. There shall be no defects detrimental to the mechanical or electrical performance.
Salt Spray (corrosion)	*(meets SAE-AS39029, paragraph 3.5.12)* When tested as specified in 4.7.13, mated contacts shall withstand 48 hours of salt spray conditioning without defects detrimental to the mechanical or electrical performance.
Temperature life	*(meets SAE-AS39029, paragraph 3.5.13)* When tested as specified in paragraph 4.7.14, mated contacts shall withstand temperature conditioning for 1,000 hours without defects detrimental to mechanical or electrical performance. There shall be no diffusion/migration of the base metal through the contact outer plating.Class A - Maximum operating temperature +125°C. per paragraph 1.2.2
Dielectric withstanding voltage	*(meets SAE-AS39029, paragraph 3.5.19)* When tested as specified in paragraph 4.7.20, crimped contacts shall show no evidence of breakdown or flashover.
Workmanship	*(meets SAE-AS39029, paragraph 3.7)* Contacts shall be processed in such a manner as to be uniform in quality and shall be free from foreign material and burrs or sharp corners that might damage the connector or affect mating of the contacts. Burrs and sharp edges shall be removed 0.005 inch maximum.

© 2011 Glenair, Inc.

M39029/56
850-001
Standard Duty Electrical Socket Contact

D38999
Ser. I, III, IV

Standard Socket Crimp Contact for MIL-DTL-38999 Series I, III and IV Connectors

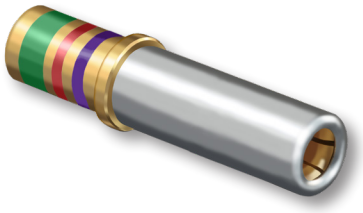

Mating End Size	Wire Accomodation	Military Part Number	Glenair Part Number
22	22-28 AWG	M39029/56-348	850-001-22-348
20	20-24 AWG	M39029/56-351	850-001-20-351
16	16-20 AWG	M39029/56-352	850-001-16-352
12	12-14 AWG	M39029/56-353	850-001-12-353
10	10 AWG	M39029/56-527	850-001-10-527

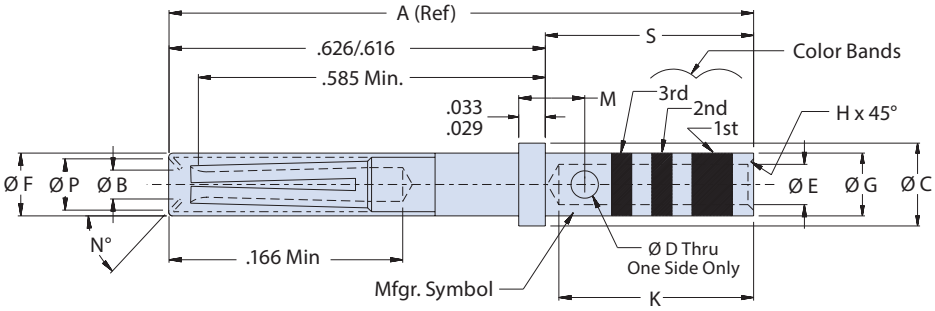

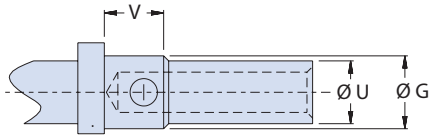

-10-527 Only

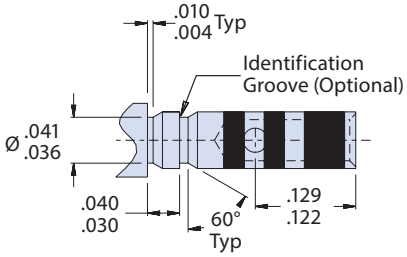

-22-348 Only

*Material and Finish**

Pin Contact: Copper Alloy/Gold Plated
Socket Contact: Copper Alloy/Gold Plated
Socket Contact Hood: Passivated Stainless Steel

* See pages A-4 and A-5 for detailed material specifications

© 2011 Glenair, Inc.

M39029/56
850-001
Standard Duty Electrical Socket Contact

TABLE I: CONTACT DIMENSIONS

Size	Part Number	Military Number	A (ref)	Ø B Min.	Ø C	Ø D	Ø E	Ø F Max	Ø G	Ø H	K Min
22	850-001-22-348	M39029/56-348	.855	.031	.062 .060	.022 .018	.0355 .0335	.062	.048 .046	.005 .003	.141
20	850-001-20-351	M39029/56-351		.0415	.094 .091	.032 .026	.048 .046	.078	.070 .068	.010 .005	.209
16	850-001-16-352	M39029/56-352		.064	.130 .127	.042 .036	.068 .066	.113	.103 .101	.010 .005	.209
12	850-001-12-353	M39029/56-353		.0955	.182 .179	.042 .036	.102 .098	.161	.151 .148	.016 .005	.209
10	850-001-10-527	M39029/56-527	1.021	.1265	.242 .238	.052 .046	.140 .134	.215	.213 .207	.016 .005	.385 .355

TABLE I (Continued): CONTACT DIMENSIONS

Size	Part Number	Military Number	M	N°	Ø P Min	S	Ø U	V	Color Bands		
									1st	2nd	3rd
22	850-001-22-348	M39029/56-348	–	50° 44°	.047	.237 .231	–	–	Orange	Yellow	Grey
20	850-001-20-351	M39029/56-351	.078 .072	47° 40°	.053		–	–	Orange	Green	Brown
16	850-001-16-352	M39029/56-352	.088 .082	47° 40°	.084		–	–	Orange	Green	Red
12	850-001-12-353	M39029/56-353	.088 .082	47° 40°	.118		–	–	Orange	Green	Orange
10	850-001-10-527	M39029/56-527	.115 .108	Full R	.146	.405 .395	.183 .177	.121 .111	Green	Red	Violet

TABLE II: TOOL COMPATIBILITY

Size	Part Number	Military Number	AWG Handling	Crimp Tool	Positioner	Insertion Tool	Extraction Tool
22	850-001-22-348	M39029/56-348	22, 24, 26, 28	M22520/2-01 M22520/7-01	M22520/2-07 M22520//7-05	M81969/14-01 M81969/8-01	M81969/14-01 M81969/8-02
20	850-001-20-351	M39029/56-351	20, 22, 24	M22520/7-01 M22520/2-01 M22520/1-01	M22520/7-08 M22520/2-10 M22520/1-04 (Red)	M81969/8-05 M81969/14-02	M81969/8-06 M81969/14-02
16	850-001-16-352	M39029/56-352	16, 18, 20	M22520/1-01 M22520/7-01	M22520/1-04 (Blue) M22520/7-04	M81969/8-07 M81969/14-03	M81969/8-08 M81969/14-03
12	850-001-12-353	M39029/56-353	12, 14	M22520/1-01	M22520/1-04 (Yellow)	M81969/8-09 M81969/14-04	M81969/8-10 M81969/14-04
10	850-001-10-527	M39029/56-527	10	Daniels 1716P-1	Daniels 1716P-1	M81969/14-05 and M81969/8-11	M81969/14-05 and M81969/8-12

© 2011 Glenair, Inc.

M39029/57
850-003
Standard Duty Electrical Socket Contact

D38999 Series II | M24308 | M55302 | M83733

Standard Socket Crimp Contact for MIL-DTL-38999 Series II Connectors



Mating End Size	Wire Accomodation	Military Part Number	Glenair Part Number
22	22-28 AWG	M39029/57-354	850-003-22-354
20	20-24 AWG	M39029/57-357	850-003-20-357
16	16-20 AWG	M39029/57-358	850-003-16-358
12	12-14 AWG	M39029/57-359	850-003-12-359

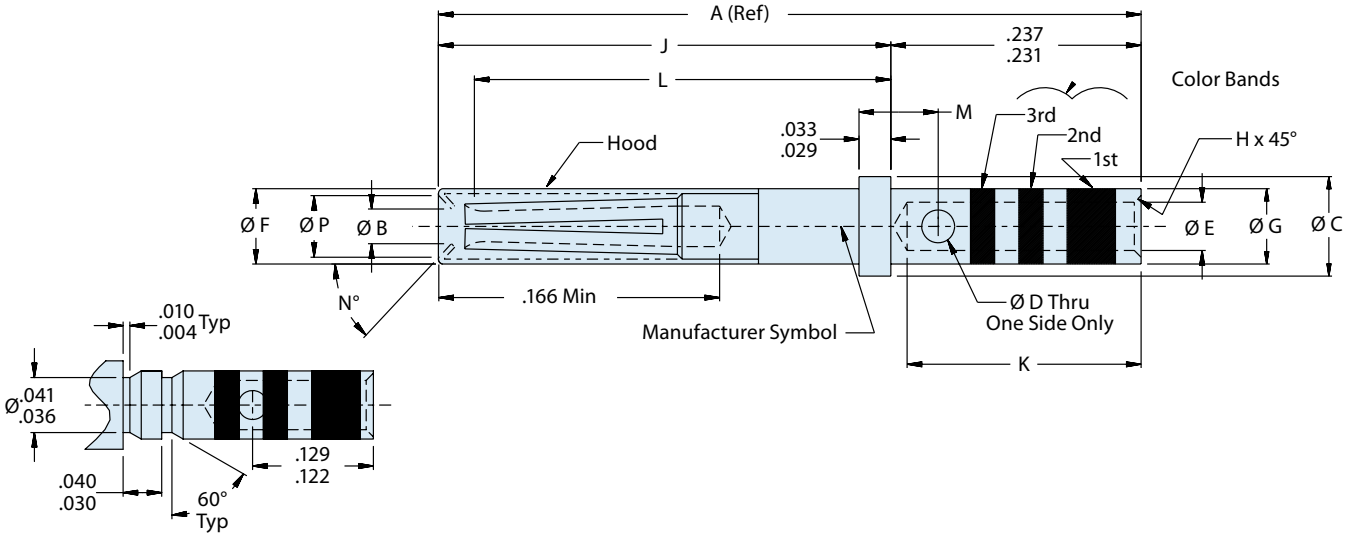

-22-354 Only

*Material and Finish**

Pin Contact: Copper Alloy/Gold Plated
Socket Contact: Copper Alloy/Gold Plated
Socket Contact Hood: Passivated Stainless Steel

* See pages A-4 and A-5 for detailed material specifications

© 2011 Glenair, Inc.

TABLE I: CONTACT DIMENSIONS											
Size	Part Number	Military Number	A (ref)	ø B Min.	ø C	ø D	ø E	ø F Max.	ø G	H	J
22	850-003-22-354	M39029/57-354	.518	.031	.062 .060	.022 .018	.0355 .0335	.062	.048 .046	.005 .003	.289 .279
20	850-003-20-357	M39029/57-357	.518	.0415	.094 .091	.032 .026	.048 .046	.078	.070 .068	.010 .005	.289 .279
16	850-003-16-358	M39029/57-358	.518	.064	.130 .127	.042 .036	.068 .066	.113	.103 .101	.010 .005	.289 .279
12	850-003-12-359	M39029/57-359	.518	.0955	.182 .179	.042 .036	.102 .098	.161	.151 .148	.016 .005	.289 .279

TABLE I (Continued): CONTACT DIMENSIONS										
Size	Part Number	Military Number	K Min.	L Min.	M	N°	Ø P Min.	Color Bands		
								1st	2nd	3rd
22	850-003-22-354	M39029/57-354	.141	.248	–	50 44	.047	Orange	Green	Yellow
20	850-003-20-357	M39029/57-357	.209	.248	.078 .072	47 28	.053	Orange	Green	Violet
16	850-003-16-358	M39029/57-358	.209	.248	.088 .082	47 28	.084	Orange	Green	Gray
12	850-003-12-359	M39029/57-359	.209	.248	.088 .082	47 28	.118	Orange	Green	White

TABLE II: TOOL COMPATIBILITY							
Size	Part Number	Military Number	AWG Handling	Crimp Tool	Positioner	Insertion Tool	Extraction Tool
22	850-003-22-354	M39029/57-354	22, 24, 26, 28	M22520/2-01 M22520/7-01	M22520/2-06 M22520//7-06	M81969/14-01 M81969/8-01	M81969/14-01 M81969/8-02
20	850-003-20-357	M39029/57-357	20, 22, 24	M22520/7-01 M22520/2-01 M22520/1-01	M22520/7-08 M22520/2-10 M22520/1-04 (Red)	M81969/8-05 M81969/14-02	M81969/8-06 M81969/14-02
16	850-003-16-358	M39029/57-358	16, 18, 20	M22520/1-01 M22520/7-01	M22520/1-04 (Blue) M22520/7-04	M81969/8-07 M81969/14-03	M81969/8-08 M81969/14-03
12	850-003-12-359	M39029/57-359	12, 14	M22520/1-01	M22520/1-04 (Yellow)	M81969/8-09 M81969/14-04	M81969/8-10 M81969/14-04

© 2011 Glenair, Inc.

M39029/58
850-002
Standard Duty Electrical Pin Contact

D38999 Ser. I, II, III, IV | M24308 | M55302 | M83733

Standard Pin Crimp Contact for MIL-DTL-38999 Series I, II, III and IV Connectors

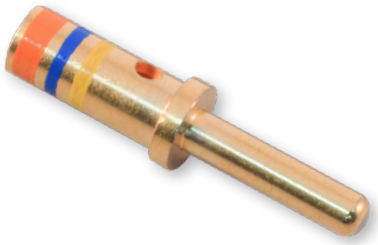

Mating End Size	Wire Accomodation	Military Part Number	Glenair Part Number
22	22-28 AWG	M39029/58-360	850-002-22-360
20	20-24 AWG	M39029/58-363	850-002-20-363
16	16-20 AWG	M39029/58-364	850-002-16-364
12	12-14 AWG	M39029/58-365	850-002-12-365
10	10 AWG	M39029/58-528	850-002-10-528

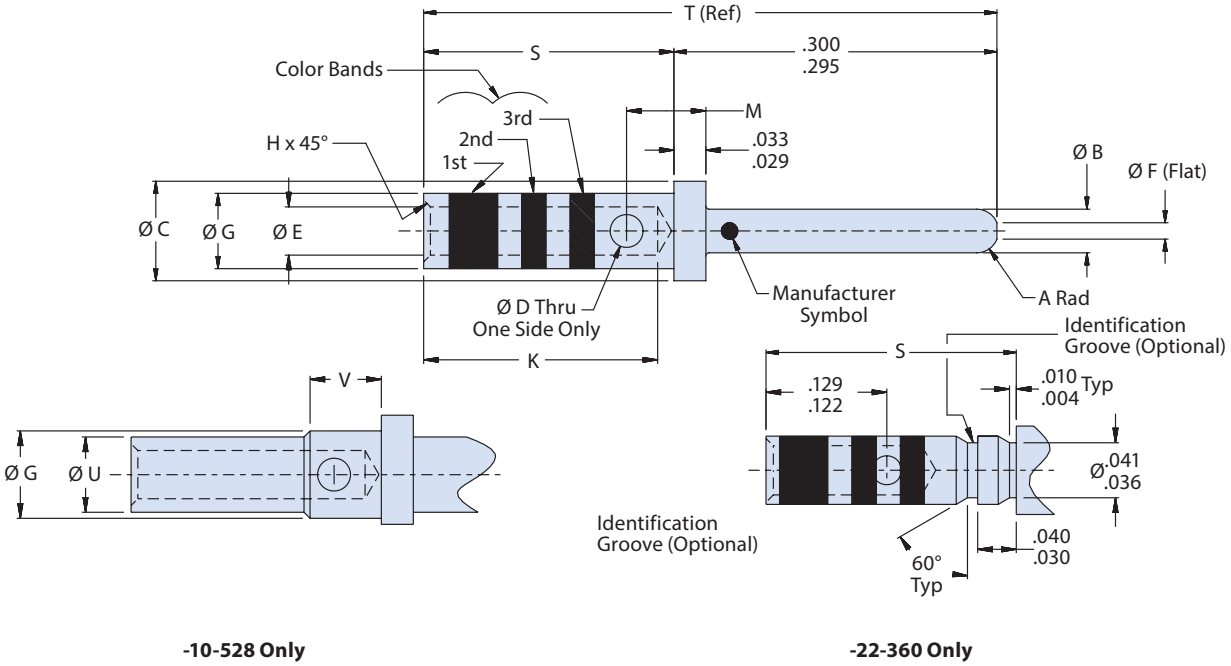

-10-528 Only **-22-360 Only**

*Material and Finish**

Pin Contact: Copper Alloy/Gold Plated
Socket Contact: Copper Alloy/Gold Plated
Socket Contact Hood: Passivated Stainless Steel

* See pages A-4 and A-5 for detailed material specifications

© 2011 Glenair, Inc.

TABLE I: CONTACT DIMENSIONS										
Size	Part Number	Military Number	A (rad)	ø B Min.	ø C	ø D	ø E	ø F	ø G	H
22	850-002-22-360	M39029/58-360	.020 .010	.0305 .0295	.062 .060	.022 .018	.0355 .0335	.011 max	.048 .046	.005 .003
20	850-002-20-363	M39029/58-363	.025 .020	.041 .039	.094 .091	.032 .026	.048 .046	.015 max	.070 .068	.010 .005
16	850-002-16-364	M39029/58-364	.025 .020	.0635 .0616	.130 .127	.042 .036	.068 .066	.030 .011	.103 .101	.010 .005
12	850-002-12-365	M39029/58-365	.025 .020	.095 .093	.182 .179	.042 .036	.102 .098	.062 .043	.151 .148	.016 .005
10	850-002-10-528	M39029/58-528	.025 .020	.126 .124	.242 .238	.052 .040	.140 .134	.094 .074	.213 .207	.016 .005

TABLE I (Continued): CONTACT DIMENSIONS										
Size	Part Number	Military Number	K Min.	M	S	T (Ref)	Ø U	V	Color Bands	
									1st	2nd	3rd
22	850-002-22-360	M39029/58-360	.141	–	.237 .231	.531	–	–	Orange	Blue	Black
20	850-002-20-363	M39029/58-363	.209	.078 .072	.237 .231	.531	–	–	Orange	Blue	Orange
16	850-002-16-364	M39029/58-364	.209	.088 .082	.237 .231	.531	–	–	Orange	Blue	Yellow
12	850-002-12-365	M39029/58-365	.209	.088 .082	.237 .231	.531	–	–	Orange	Blue	Green
10	850-002-10-528	M39029/58-528	.355	.115 .108	.405 .395	.698	.183 .177	.121 .111	Green	Red	Gray

TABLE II: TOOL COMPATIBILITY							
Size	Part Number	Military Number	AWG Handling	Crimp Tool	Positioner	Insertion Tool	Extraction Tool
22	850-002-22-360	M39029/58-360	22, 24, 26, 28	M22520/2-01 M22520/7-01	M22520/2-09 M22520//7-07	M81969/14-01 M81969/8-01	M81969/14-01 M81969/8-02
20	850-002-20-363	M39029/58-363	20, 22, 24	M22520/7-01 M22520/2-01 M22520/1-01	M22520/7-08 M22520/2-10 M22520/1-04 (Red)	M81969/8-05 M81969/14-02	M81969/8-06 M81969/14-02
16	850-002-16-364	M39029/58-364	16, 18, 20	M22520/1-01 M22520/7-01	M22520/1-04 (Blue) M22520/7-04	M81969/8-07 M81969/14-03	M81969/8-08 M81969/14-03
12	850-002-12-365	M39029/58-365	12, 14	M22520/1-01	M22520/1-04 (Yellow)	M81969/8-09 M81969/14-04	M81969/8-10 M81969/14-04
10	850-002-10-528	M39029/58-528	10	Daniels 1716P-1	Daniels 1716P-1	M81969/14-05 and M81969/8-11	M81969/14-05 and M81969/8-12

© 2011 Glenair, Inc.

M39029/63
850-021
Standard Duty Electrical Socket Contact

M24308

Standard Socket Crimp Contact for MIL-DTL-24308



Mating End Size	Wire Accomodation	Military Part Number	Glenair Part Number
20	20-24 AWG	M39029/63-368	850-021-20-368

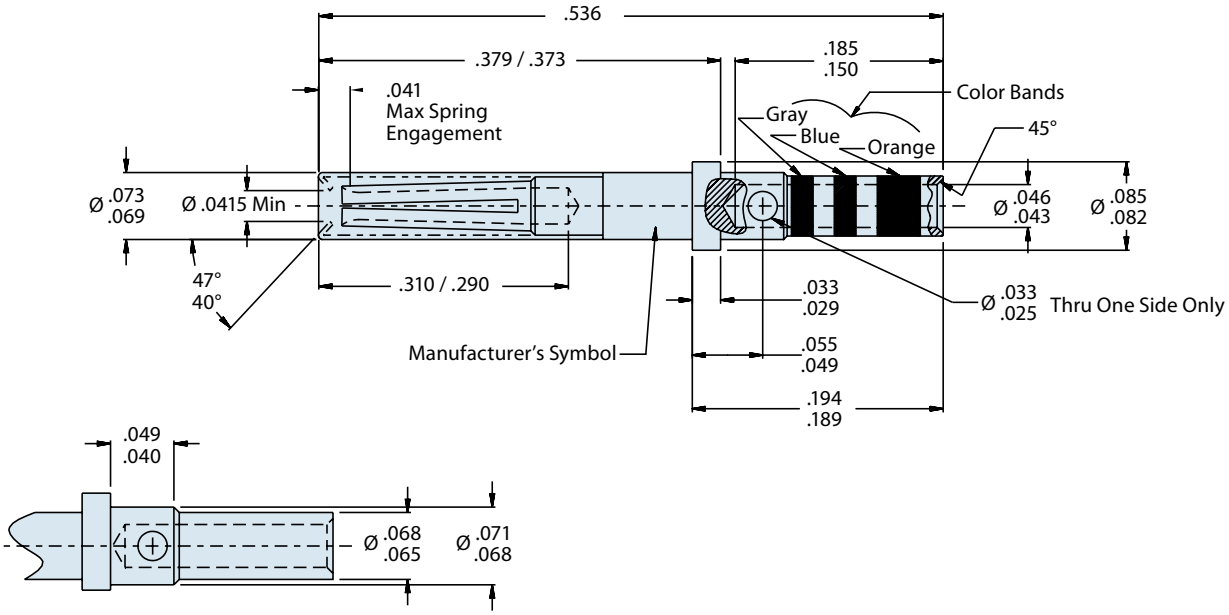

*Material and Finish**

Pin Contact: Copper Alloy/Gold Plated
Socket Contact: Copper Alloy/Gold Plated
Socket Contact Hood: Passivated Stainless Steel

*See pages A-4 and A-5 for detailed material specifications

Tools

Crimp Tool: M22520/2-01
Positioner: M22520/2-08
Insertion/Extraction Tools: M81969/14-02 or M81969/1-02

© 2011 Glenair, Inc.

M24308

Standard Pin Crimp Contact for MIL-DTL-24308



Mating End Size	Wire Accomodation	Military Part Number	Glenair Part Number
20	20-24 AWG	M39029/64-369	850-022-20-369

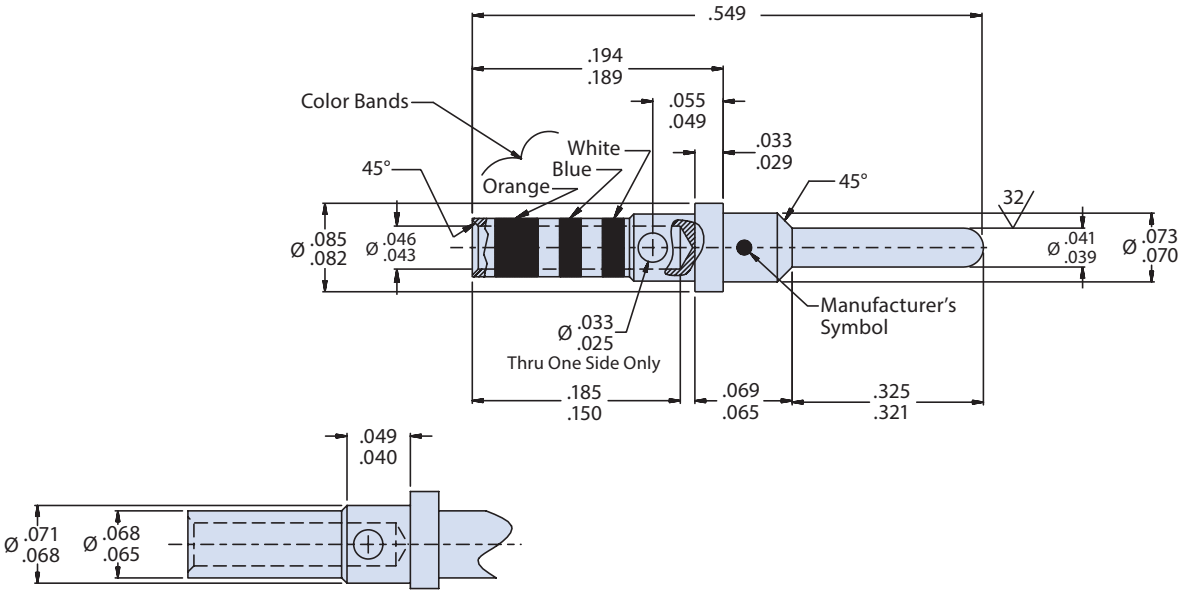

*Material and Finish**

Pin Contact: Copper Alloy/Gold Plated
Socket Contact: Copper Alloy/Gold Plated
Socket Contact Hood: Passivated Stainless Steel

*See pages A-4 and A-5 for detailed material specifications

Tools

Crimp Tool: M22520/2-01
Positioner: M22520/2-08
Insertion/Extraction Tools: M81969/14-02 or M81969/1-02

© 2011 Glenair, Inc.

M39029/83
850-004
Standard Duty Electrical Pin Contact

M28840

Standard Pin Crimp Contact for MIL-DTL-28840 Connectors



Mating End Size	Wire Accomodation	Military Part Number	Glenair Part Number
20	28-32 AWG	M39029/83-451	850-004-20-451
20	22-26 AWG	M39029/83-450	850-004-20-450
20	20-24 AWG	M39029/83-508	850-004-20-508

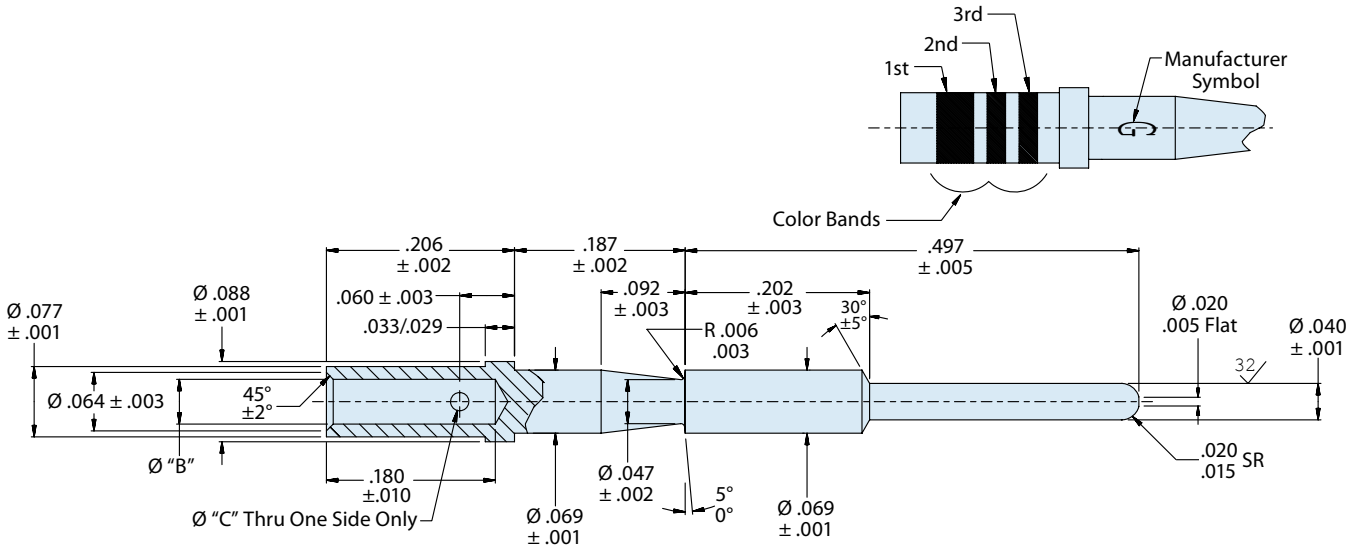

*Material and Finish**

Pin Contact: Copper Alloy/Gold Plated
Socket Contact: Copper Alloy/Gold Plated
Socket Contact Hood: Passivated Stainless Steel

* See pages A-4 and A-5 for detailed material specifications

© 2011 Glenair, Inc.

TABLE I: CONTACT DIMENSIONS							
Size	Part Number	Military Number	Ø B	Ø C	Color Bands		
					1st	2nd	3rd
20	850-004-20-508	M39029/83-508	.050 .048	.032 .026	Green	Black	Grey
20	850-004-20-450	M39029/83-450	.0355 .0335	.032 .026	Yellow	Green	Black
20	850-004-20-451	M39029/83-451	.0200 .0180	.022 .018	Yellow	Green	Brown

TABLE II: TOOL COMPATIBILITY							
Size	Part Number	Military Number	AWG Handling	Crimp Tool	Positioner	Insertion Tool	Extraction Tool
20	850-004-20-508	M39029/83-508	20, 22, 24	M22520/34-01	M22520/34-02	M81969/33-01	M81969/34-01
20	850-004-20-450	M39029/83-450	22, 24, 26	M22520/34-01	M22520/34-02	M81969/33-01	M81969/34-01
20	850-004-20-451	M39029/83-451	28, 30, 32	M22520/34-01	M22520/34-02	M81969/33-01	M81696/34-01

© 2011 Glenair, Inc.

M39029/84
850-005
Standard Duty Electrical Socket Contact

M28840

Standard Socket Crimp Contact for MIL-DTL-28840 Connectors



Mating End Size	Wire Accomodation	Military Part Number	Glenair Part Number
20	28-32 AWG	M39029/84-453	850-005-20-453
20	22-26 AWG	M39029/84-452	850-005-20-452
20	20-24 AWG	M39029/84-509	850-005-20-509

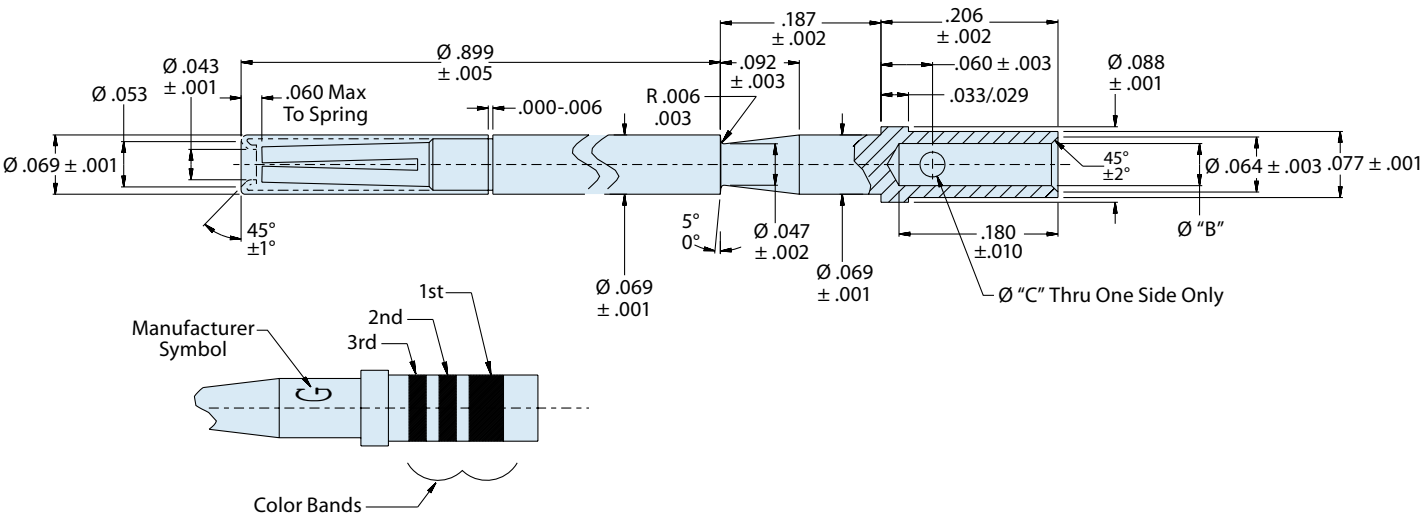

*Material and Finish**

Pin Contact: Copper Alloy/Gold Plated
Socket Contact: Copper Alloy/Gold Plated
Socket Contact Hood: Passivated Stainless Steel

* See pages A-4 and A-5 for detailed material specifications

© 2011 Glenair, Inc.

TABLE I: CONTACT DIMENSIONS							
Size	Part Number	Military Number	Ø B	Ø C	Color Bands		
					1st	2nd	3rd
20	850-005-20-509	M39029/84-509	.050 .048	.032 .026	Green	Black	White
20	850-005-20-452	M39029/84-452	.0355 .0335	.032 .026	Yellow	Green	Red
20	850-005-20-453	M39029/84-453	.0200 .0180	.022 .018	Yellow	Green	Orange

TABLE II: TOOL COMPATIBILITY							
Size	Part Number	Military Number	AWG Handling	Crimp Tool	Positioner	Insertion Tool	Extraction Tool
20	850-005-20-509	M39029/84-509	20, 22, 24	M22520/34-01	M22520/34-02	M81969/33-01	M81969/34-01
20	850-005-20-452	M39029/84-452	22, 24, 26	M22520/34-01	M22520/34-02	M81969/33-01	M81969/34-01
20	850-005-20-453	M39029/84-453	28, 30, 32	M22520/34-01	M22520/34-02	M81969/33-01	M81696/34-01

© 2011 Glenair, Inc.

39029/106
850-006
Extended Duty Electrical Socket Contact

D38999 Ser. I, III, IV

M29600

Extended Duty Socket Crimp Contact for MIL-DTL-38999 Series I, III and IV Connectors



Mating End Size	Wire Accomodation	Military Part Number	Glenair Part Number
22	22-28 AWG	M39029/106-614	850-006-22-614
20	20-24 AWG	M39029/106-615	850-006-20-615
16	16-20 AWG	M39029/106-616	850-006-16-616
12	12-14 AWG	M39029/106-617	850-006-12-617
10	10 AWG	M39029/106-618	850-006-10-618

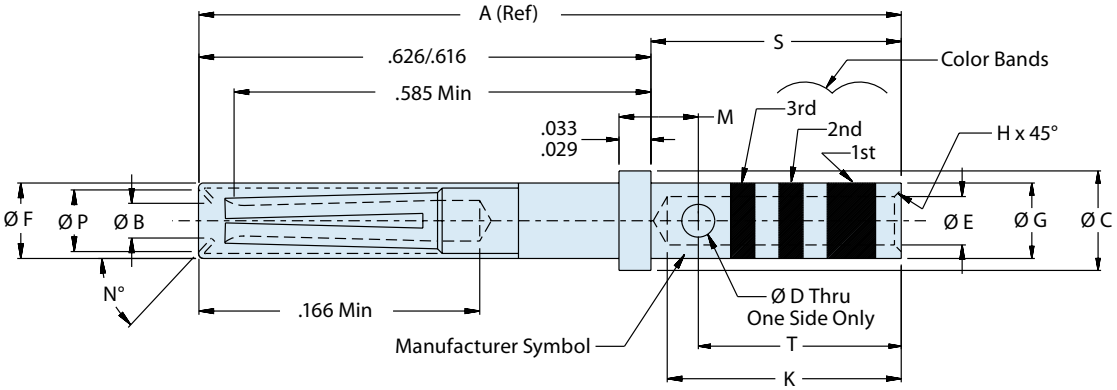

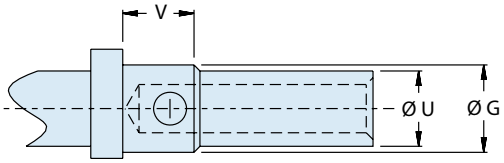

-10-618 Only

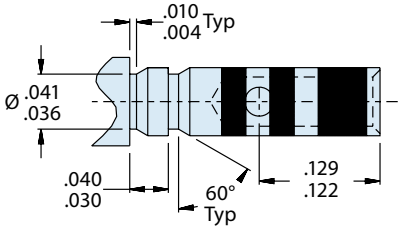

-22-614 Only

Material and Finish

Copper alloy, plated with 5 µinches gold over 45 µinches palladium alloy.
Rated to 1500 cycles of durability.

© 2011 Glenair, Inc.

39029/106
850-006
Extended Duty Electrical Socket Contact

TABLE I: CONTACT DIMENSIONS										
Size	Part Number	Military Number	A (ref)	ø B Min.	ø C	ø D	ø E	ø F Max.	ø G	ø H
22	850-006-22-614	M39029/106-614	.855	.031	.062 .060	.022 .018	.0355 .0335	.062	.048 .046	.005 .003
20	850-006-20-615	M39029/106-615		.0415	.094 .091	.032 .026	.048 .046	.078	.070 .068	.010 .005
16	850-006-16-616	M39029/106-616		.064	.130 .127	.042 .036	.068 .066	.113	.103 .101	.010 .005
12	850-006-12-617	M39029/106-617		.0955	.182 .179	.042 .036	.102 .098	.161	.151 .148	.016 .005
10	850-006-10-618	M39029/106-618	1.021	.1265	.242 .238	.052 .046	.140 .134	.215	.213 .207	.016 .005

TABLE I: (Continued) CONTACT DIMENSIONS											
Size	Part Number	Military Number	K Min.	M	N°	ø P Min.	S	ø U	V	Color Bands	
										1st	2nd	3rd
22	850-006-22-614	M39029/106-614	.141	–	50° 44°	.047	.237 .231	–	–	Blue	Brown	Yellow
20	850-006-20-615	M39029/106-615	.209	.078 .072	47° 40°	.053		–	–	Blue	Brown	Green
16	850-006-16-616	M39029/106-616	.209	.088 .082	47° 40°	.084		–	–	Blue	Brown	Blue
12	850-006-12-617	M39029/106-617	.209	.088 .082	47° 40°	.118		–	–	Blue	Brown	Violet
10	850-006-10-618	M39029/106-618	.385 .355	.115 .108	Full Radius	.146	.405 .395	.183 .177	.121 .111	Blue	Brown	Gray

TABLE II: TOOL COMPATIBILITY							
Size	Part Number	Military Number	AWG Handling	Crimp Tool	Positioner	Insertion Tool	Extraction Tool
22	850-006-22-614	M39029/106-614	22, 24, 26, 28	M22520/2-01 M22520/7-01	M22520/2-07 M22520/7-05	M81969/8-01 M81969/14-01	M81969/8-02 M81969/14-01
20	850-006-20-615	M39029/106-615	20, 22, 24	M22520/1-01 M22520/2-01 M22520/7-01	M22520/1-04 (red) M22520/2-10 M22520/7-08	M81969/8-05 M81969/14-10	M81969/8-06 M81969/14-10
16	850-006-16-616	M39029/106-616	16, 18, 20	M22520/1-01 M22520/7-01	M22520/1-04 (blue) M22520/7-04	M81969/8-07 M81969/14-03	M81969/8-08 M81969/14-03
12	850-006-12-617	M39029/106-617	12, 14	M22520/1-01	M22520/1-04 (yellow)	M81969/8-09 M81969/14-04	M81969/8-10 M81969/14-03
10	850-006-10-618	M39029/106-618	10	Daniels 1716P-1	Daniels 1716P-1	M81969/14-05 and M81969/8-11	M81969/14-05 and M81969/8-12

© 2011 Glenair, Inc.

M39029/107
850-007
Extended Duty Electrical Pin Contact

D38999 Ser. I, III, IV

M29600

Extended Duty Pin Crimp Contact for MIL-DTL-38999 Series I, III and IV Connectors



Mating End Size	Wire Accomodation	Military Part Number	Glenair Part Number
22	22-28 AWG	M39029/107-620	850-007-22-620
20	20-24 AWG	M39029/107-621	850-007-20-621
16	16-20 AWG	M39029/107-622	850-007-16-622
12	12-14 AWG	M39029/107-623	850-007-12-623
10	10 AWG	M39029/107-624	850-007-10-624

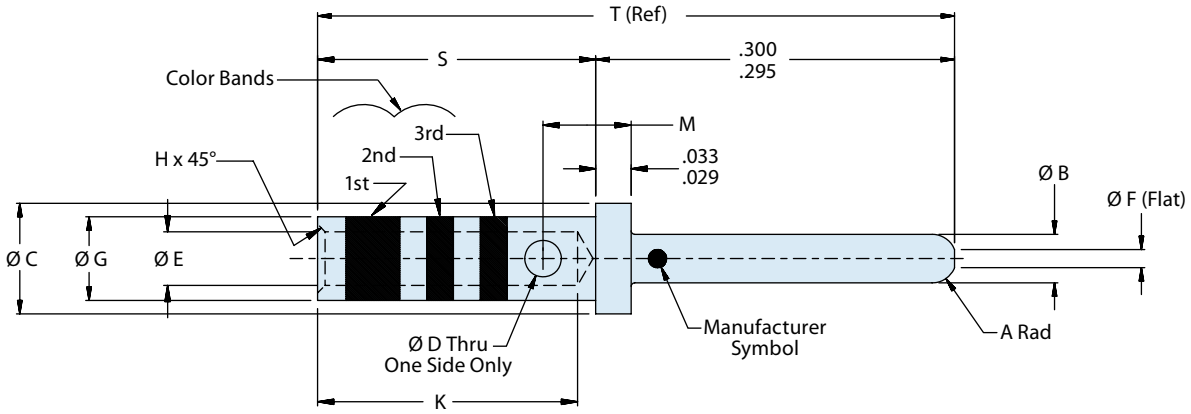

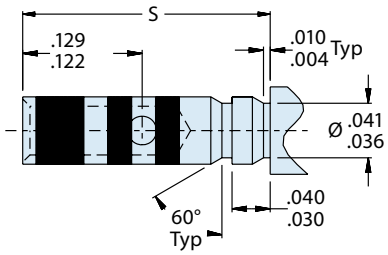

-22-620 Only

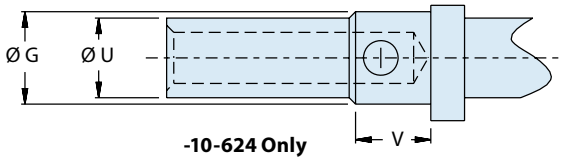

-10-624 Only

Material and Finish

Copper alloy, plated with 5 µinches gold over 45 µinches palladium alloy.
Rated to 1500 cycles of durability.

© 2011 Glenair, Inc.

M39029/107
850-007
Extended Duty Electrical Pin Contact

TABLE I: CONTACT DIMENSIONS										
Size	Part Number	Military Number	A Rad	ø B	ø C	ø D	ø E	ø F	ø G	H
22	850-007-22-620	M39029/107-620	.020 .010	.0305 .0295	.062 .060	.022 .018	.0355 .0335	.011 max	.048 .046	.005 .003
20	850-007-20-621	M39029/107-621	.025 .015	.041 .039	.094 .091	.032 .026	.048 .046	.015 max	.070 .068	.010 .005
16	850-007-16-622	M39029/107-622	.025 .020	.0635 .0616	.130 .127	.042 .036	.068 .066	.030 .011	.103 .101	.010 .005
12	850-007-12-623	M39029/107-623	.025 .020	.095 .093	.182 .179	.042 .036	.102 .098	.062 .043	.151 .148	.016 .005
10	850-007-10-624	M39029/107-624	.025 .020	.126 .124	.242 .238	.052 .040	.140 .134	.094 .074	.213 .207	.016 .005

TABLE I: (Continued) CONTACT DIMENSIONS											
Size	Part Number	Military Number	K	M	S	T (Ref)	Ø U	V	Color Bands		
									1st	2nd	3rd
22	850-007-22-620	M39029/107-620	.157 .141	–	.237 .231	.531	–	–	Blue	Red	Black
20	850-007-20-621	M39029/107-621	.229 .209	.078 .072	.237 .231	.531	–	–	Blue	Red	Brown
16	850-007-16-622	M39029/107-622	.229 .209	.088 .082	.237 .231	.531	–	–	Blue	Red	Red
12	850-007-12-623	M39029/107-623	.229 .209	.088 .082	.237 .231	.531	–	–	Blue	Red	Orange
10	850-007-10-624	M39029/107-624	.385 .355	.115 .108	.405 .395	.698	.183 .177	.121 .111	Blue	Red	Yellow

TABLE II: TOOL COMPATIBILITY							
Size	Part Number	Military Number	AWG Handling	Crimp Tool	Positioner	Insertion Tool	Extraction Tool
22	850-007-22-620	M39029/107-620	22, 24, 26, 28	M22520/2-01 M22520/7-01	M22520/2-09 M22520/7-07	M81969/8-01 M81969/14-01	M81969/8-02 M81969/14-01
20	850-007-20-621	M39029/107-621	20, 22, 24	M22520/1-01 M22520/2-01 M22520/7-01	M22520/1-04 (red) M22520/2-10 M22520/7-08	M81969/8-05 M81969/14-10	M81969/8-06 M81969/14-10
16	850-007-16-622	M39029/107-622	16, 18, 20	M22520/1-01 M22520/7-01	M22520/1-04 (blue) M22520/7-04	M81969/8-07 M81969/14-03	M81969/8-08 M81969/14-03
12	850-007-12-623	M39029/107-623	12, 14	M22520/1-01	M22520/1-04 (yellow)	M81969/8-09 M81969/14-04	M81969/8-10 M81969/14-04
10	850-007-10-624	M39029/107-624	10	Daniels 1716P-1	Daniels 1716P-1	M81969/14-05 and M81969/8-11	M81969/14-05 and M81969/8-12

© 2011 Glenair, Inc.

M39029/121
850-318
Standard Duty Electrical Socket Contact

D38999 Sr. III

QPL

Standard Socket Crimp Contact Expanded Performance, for High Vibration, High Temperature in MIL-DTL-38999 Series III Connectors

Mating End Size	Wire Accomodation	Military Part Number	Glenair Part Number
23	23-28 AWG	M39029/121-663	850-318-23-663

Connector Contact Size 23
With Wire Barrel 22
-23-663 Only

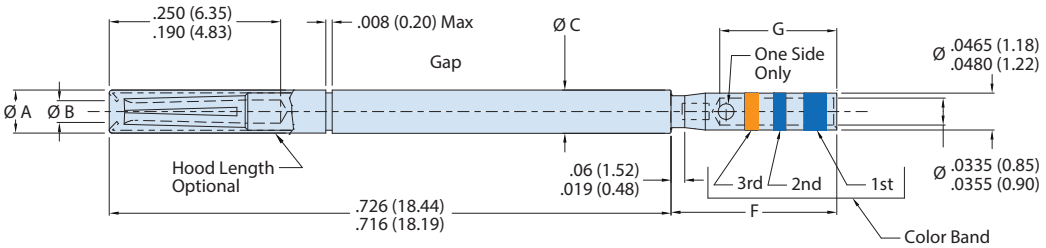

Material and Finish

Contact body - Copper alloy per AS39029 / gold plated per ASTM B488, Type II, Code C, .000050 inches minimum thick over nickel plated per AMS-QQ-N-290, class 2, .000030 to .000150 inches thick.

Hood - Stainless steel 305, passivated.

© 2011 Glenair, Inc.

M39029/122
850-319
Standard Duty Electrical Pin Contact

D38999 Sr. III

QPL

Standard Pin Crimp Contact Expanded Performance, for High Vibration, High Temperature in MIL-DTL-38999 Series III Connectors

Mating End Size	Wire Accomodation	Military Part Number	Glenair Part Number
23	23-28 AWG	M39029/122-670	850-319-23-670

Connector Contact Size 23
With Wire Barrel 22
-23-670 Only

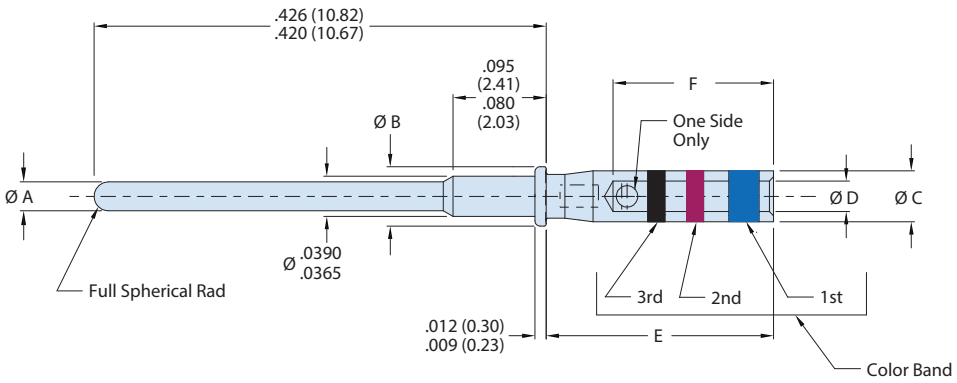

Material and Finish

Contact body - Copper alloy per AS39029 / gold plated per ASTM B488, Type II, Code C, .000050 inches minimum thick over nickel plated per AMS-QQ-N-290, class 2, .000030 to .000150 inches thick.
Hood - Stainless steel 305, passivated.

© 2011 Glenair, Inc.

SERIES 257-606

QUADRAX

Glenair MIL-DTL-38999 Series III Type Quadrax Connectors



Glenair doesn't just make a complete range of high-frequency shielded contacts. We also make the connector packaging too—from Quadrax equipped circular connectors to Coax-equipped ARINCs, D-Subminiatures and our own Series 79 Micro-Crimp. As we like to say, we produce the complete solution—soup to nuts. And because we have decades of experience with all classes of high performance connectors, we're well positioned to design and manufacture a truly complete interconnect solution, including wire and cable, contacts, connectors, shielding, backshells, dust caps, shrink boots, you name it. Simply put, nobody else in the interconnect industry can offer such a comprehensive solution. Sure, we're happy to just be your contact supplier. But if you like our high-availability approach to that business (ample manufacturing capacity, same-day shipment inventory and the best and most available technical support team in the industry) we're thinking you'll love the service and support we bring to all our product lines. So give us a try. We promise you'll appreciate the extra value of working with a supplier that truly understands what availability is all about.

Glenair®

1211 Air Way • Glendale, CA 91201-2497 • Tel: 818-247-6000 • Fax: 818-500-9912 • E-Mail: sales@glenair.com

Shielded Contacts

High Performance: Coax, Twinax and Quadrax

From Coax...

Shielded coaxial contacts have a special role in the interconnect system and are designed for use in a wide range of military and aerospace connectors that service analog radio frequency or microwave applications. Most Glenair cylindrical connectors, including our D38999 type, can accommodate shielded contacts. Rectangular connector packages, such as our high-performance HiPer-D are also ideally suited for these shielded contacts.

...to Twinax and Quadrax

High-speed differential impedance contacts, such as those used in advanced digital communications applications, are another key specialty at Glenair. Our Twinax and Quadrax contacts are exactingly engineered and manufactured using the best available materials and manufacturing processes. Conductive elements are gold-plated copper alloy. Dielectrics are high-performance fluorocarbon. When applicable, our shielded contacts are approved to SAE AS39029.



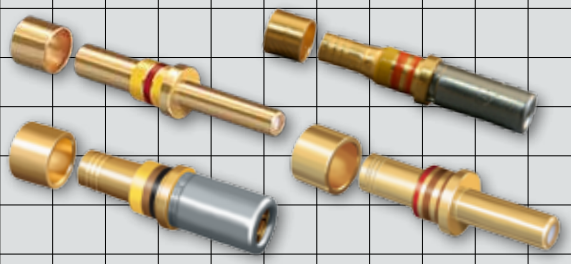

- **Qualified to SAE-AS39029 on Dozens of Contacts—and Growing!**
- **Same Day Inventory on Popular and Hard-to-Find Styles**
- **Highest Quality Materials Including Enhanced Durability Plating**
- **Fully Intermatable with Equivalent AS39029 Contacts**

© 2011 Glenair, Inc.

High Performance Shielded Contacts Cross Reference

Military Part Number	Glenair Part Number	Contact Size	Pin / Socket	Type	BIN Color Striping			Product Page
M39029/27-210	852-001-12-210	12	Socket	Coaxial	Red	Brown	Black	B-4
M39029/27-402	852-001-12-402	12	Socket	Coaxial	Yellow	Black	Red	
M39029/27-403	852-001-12-403	12	Socket	Coaxial	Yellow	Black	Orange	
M39029/27-404	852-001-12-404	12	Socket	Coaxial	Yellow	Black	Yellow	
M39029/27-405	852-001-12-405	12	Socket	Coaxial	Yellow	Black	Green	
M39029/27-406	852-001-12-406	12	Socket	Coaxial	Yellow	Black	Blue	
M39029/27-407	852-001-12-407	12	Socket	Coaxial	Yellow	Black	Violet	
M39029/27-408	852-001-12-408	12	Socket	Coaxial	Yellow	Black	Gray	
M39029/28-211	852-002-12-211	12	Pin	Coaxial	Red	Brown	Brown	B-6
M39029/28-409	852-002-12-409	12	Pin	Coaxial	Yellow	Black	White	
M39029/28-410	852-002-12-410	12	Pin	Coaxial	Yellow	Brown	Black	
M39029/28-411	852-002-12-411	12	Pin	Coaxial	Yellow	Brown	Brown	
M39029/28-412	852-002-12-412	12	Pin	Coaxial	Yellow	Brown	Red	
M39029/28-413	852-002-12-413	12	Pin	Coaxial	Yellow	Brown	Orange	
M39029/28-414	852-002-12-414	12	Pin	Coaxial	Yellow	Brown	Yellow	
M39029/28-415	852-002-12-415	12	Pin	Coaxial	Yellow	Brown	Green	
M39029/59-366	852-006-08-366	08	Socket	Coaxial	Orange	Blue	Blue	B-14
M39029/60-367	852-007-08-367	08	Pin	Coaxial	Orange	Blue	Violet	B-15
M39029/75-416	852-003-12-416	12	Socket	Coaxial	Yellow	Brown	Blue	B-8
M39029/75-417	852-003-12-417	12	Socket	Coaxial	Yellow	Brown	Violet	
M39029/75-418	852-003-12-418	12	Socket	Coaxial	Yellow	Brown	Gray	
M39029/75-419	852-003-12-419	12	Socket	Coaxial	Yellow	Brown	White	
M39029/75-420	852-003-12-420	12	Socket	Coaxial	Yellow	Red	Black	
M39029/75-421	852-003-12-421	12	Socket	Coaxial	Yellow	Red	Brown	
M39029/75-422	852-003-12-422	12	Socket	Coaxial	Yellow	Red	Red	
M39029/75-423	852-003-12-423	12	Socket	Coaxial	Yellow	Red	Orange	
M39029/76-424	852-008-16-424	16	Pin	Coaxial	Yellow	Red	Yellow	B-16
M39029/76-425	852-008-16-425	16	Pin	Coaxial	Yellow	Red	Green	

© 2011 Glenair, Inc.

High Performance Shielded Contacts Cross Reference



Military Part Number	Glenair Part Number	Contact Size	Pin / Socket	Type	BIN Color Striping			Product Page
M39029/76-426	852-008-16-426	16	Pin	Coaxial	Yellow	Red	Blue	B-16
M39029/76-427	852-008-16-427	16	Pin	Coaxial	Yellow	Red	Violet	
M39029/77-428	852-009-16-428	16	Socket	Coaxial	Yellow	Red	Gray	B-18
M39029/77-429	852-009-16-429	16	Socket	Coaxial	Yellow	Red	White	
M39029/77-430	852-009-16-430	16	Socket	Coaxial	Yellow	Orange	Black	
M39029/77-431	852-009-16-431	16	Socket	Coaxial	Yellow	Orange	Brown	
M39029/78-432	852-010-16-432	16	Socket	Coaxial	Yellow	Orange	Red	B-20
M39029/78-433	852-010-16-433	16	Socket	Coaxial	Yellow	Orange	Orange	
M39029/78-434	852-010-16-434	16	Socket	Coaxial	Yellow	Orange	Yellow	
M39029/78-435	852-010-16-435	16	Socket	Coaxial	Yellow	Orange	Green	
M39029/90-529	853-001-08-529	8	Pin	Concentric Twinax	Green	Red	White	B-22
M39029/91-530	853-002-08-530	8	Socket	Concentric Twinax	Green	Orange	Black	B-23
M39029/102-558	852-004-12-558	12	Pin	Coaxial	Green	Green	Gray	B-10
M39029/103-559	852-005-12-559	12	Socket	Coaxial	Green	Green	White	B-12
M39029/113-625	853-003-08-625	8	Pin	Concentric Twinax	Blue	Red	Green	B-24
M39029/113-626	853-003-08-626	8	Pin	Concentric Twinax	Blue	Red	Blue	
M39029/114-628	853-004-08-628	8	Socket	Concentric Twinax	Blue	Red	Gray	B-25
M39029/114-629	853-004-08-629	8	Socket	Concentric Twinax	Blue	Red	White	
N/A	854-001-01	8	Pin	Quadrax	N/A			B-26
N/A	854-001-02	8	Pin	Quadrax	N/A			
N/A	854-001-03	8	Pin	Quadrax	N/A			
N/A	854-001-04	8	Pin	Quadrax	N/A			
N/A	854-001-05	8	Pin	Quadrax	N/A			
N/A	854-002-01	8	Socket	Quadrax	N/A			B-27
N/A	854-002-02	8	Socket	Quadrax	N/A			
N/A	854-002-03	8	Socket	Quadrax	N/A			
N/A	854-002-04	8	Socket	Quadrax	N/A			
N/A	854-002-05	8	Socket	Quadrax	N/A			

© 2011 Glenair, Inc.

M39029/27
852-001
Size 12 Coaxial Socket

D38999 Series II

Size #12 Coaxial Socket Contacts for MIL-DTL-38999 Series II Connectors



These #12 contacts accept 50 ohm and 75 ohm coaxial cable. Inner contact is rated at 1 amp, the outer contact 12 amps. DWV rating is 1000 Vac rms sea level, 250 Vac at 50,000 feet. Contacts are packaged individually and shipped unassembled with instruction sheet. One contact consists of outer contact , fluorocarbon dielectric, inner contact and shield crimp sleeve. Inner and outer contacts are gold-plated copper alloy. Approved to SAE AS39029. 5000 megohm insulation resistance.

Type	Cable Accommodation	Part Number	Military Part Number	Color Band 1st	2nd	3rd
Socket	RG174, RG316, RG179	852-001-12-210	M39029/27-210	Red	Brown	Black
	RG180	852-001-12-402	M39029/27-402	Yellow	Black	Red
	Microdot 250-4070	852-001-12-403	M39029/27-403	Yellow	Black	Orange
	Raychem 48-502, 5022E5111	852-001-12-404	M39029/27-404	Yellow	Black	Yellow
	Raychem 48-950, 9530D5117	852-001-12-405	M39029/27-405	Yellow	Black	Green
	Raychem 7624D1311, 9527A1318	852-001-12-406	M39029/27-406	Yellow	Black	Blue
	Gore GWN1159A	852-001-12-407	M39029/27-407	Yellow	Black	Violet
	1S50MU-16, -20, -40, -70 (D24643/28)	852-001-12-408	M39029/27-408	Yellow	Black	Gray

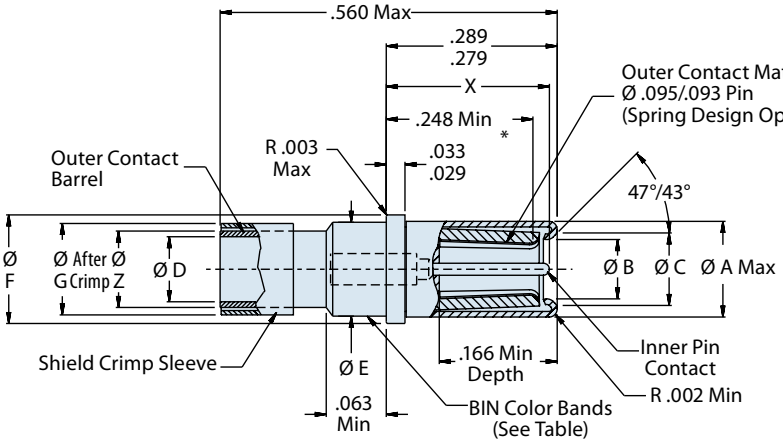

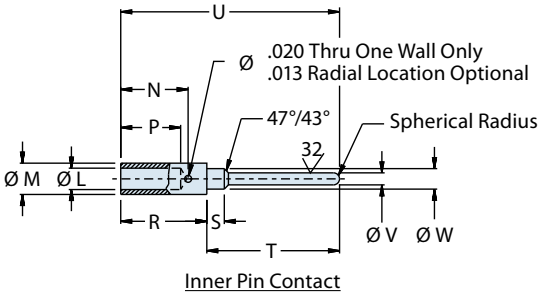

Inner Pin Contact

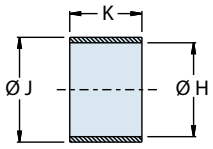

Shield Crimp Sleeve

Material and Finish

Contact Body: Copper Alloy/Gold Plated
Hood: Stainless Steel/Passivated
Center Contact: Copper Alloy/Gold Plated
Crimp Sleeve: Copper Alloy/Gold Plated
Insulator: Teflon

* Indicates point at which a square ended pin of the same basic diameter as the mating contact first engages the outer contact spring

© 2011 Glenair, Inc.

Table I

BIN Code	ØA Max	ØB	ØC	ØD Max	ØE	ØF	ØG Max	ØH Min	ØJ Max	K	ØL Min
210	0.161 (4.1)	0.100 (2.54) 0.097 (2.46)	0.123 (3.1) 0.118 (3.0)	0.090 (2.3)	0.151 (3.84) 0.148 (3.76)	0.182 (4.6) 0.179 (4.5)	0.156 (4.0)	0.127 (3.2)	0.169 (4.3)	0.125 (3.2) 0.115(2.9)	0.225 (5.7)
402	0.161 (4.1)	0.100 (2.54) 0.097 (2.46)	0.123 (3.1) 0.118 (3.0)	0.108 (2.7)	0.151 (3.84) 0.148 (3.76)	0.182 (4.6) 0.179 (4.5)	0.156 (4.0)	0.144 (3.7)	0.169 (4.3)	0.125 (3.2) 0.115(2.9)	0.225 (5.7)
403	0.161 (4.1)	0.100 (2.54) 0.097 (2.46)	0.123 (3.1) 0.118 (3.0)	0.108 (2.7)	0.151 (3.84) 0.148 (3.76)	0.182 (4.6) 0.179 (4.5)	0.156 (4.0)	0.144 (3.7)	0.169 (4.3)	0.125 (3.2) 0.115(2.9)	0.355 (9.0)
404	0.161 (4.1)	0.100 (2.54) 0.097 (2.46)	0.123 (3.1) 0.118 (3.0)	0.090 (2.3)	0.151 (3.84) 0.148 (3.76)	0.182 (4.6) 0.179 (4.5)	0.156 (4.0)	0.127 (3.2)	0.169 (4.3)	0.125 (3.2) 0.115(2.9)	0.355 (9.0)
405	0.161 (4.1)	0.100 (2.54) 0.097 (2.46)	0.123 (3.1) 0.118 (3.0)	0.090 (2.3)	0.151 (3.84) 0.148 (3.76)	0.182 (4.6) 0.179 (4.5)	0.156 (4.0)	0.127 (3.2)	0.169 (4.3)	0.125 (3.2) 0.115(2.9)	0.225 (5.7)
406	0.161 (4.1)	0.100 (2.54) 0.097 (2.46)	0.123 (3.1) 0.118 (3.0)	0.117 (3.0)	0.151 (3.84) 0.148 (3.76)	0.182 (4.6) 0.179 (4.5)	0.156 (4.0)	0.156 (4.0)	0.174 (4.4)	0.125 (3.2) 0.115(2.9)	0.27 (6.9)
407	0.161 (4.1)	0.100 (2.54) 0.097 (2.46)	0.123 (3.1) 0.118 (3.0)	0.090 (2.3)	0.151 (3.84) 0.148 (3.76)	0.182 (4.6) 0.179 (4.5)	0.156 (4.0)	0.144 (3.7)	0.169 (4.3)	0.125 (3.2) 0.115(2.9)	0.225 (5.7)
408	0.161 (4.1)	0.100 (2.54)	0.123 (3.1) 0.118 (3.0)	0.108 (2.7)	0.151 (3.84) 0.148 (3.76)	0.182 (4.6) 0.179 (4.5)	0.156 (4.0)	0.156 (4.0)	0.174 (4.4)	0.125 (3.2) 0.115(2.9)	0.355 (9.0)

Table I (continued)

BIN Code	ØM Max	N Min	P	R	S	T	U Ref	ØV	ØW	X	ØZ Max
210	0.052 (1.3)	0.112 (2.8)	0.103 (2.6) 0.096 (2.4)	0.146 (3.7) 0.140 (3.6)	0.039 (1.0) 0.033 (0.8)	0.222 (5.64) 0.219 (5.56)	0.364 (9.2)	0.0205 (0.52) 0.0195 (0.5)	0.035(0.9) 0.033 (0.8)	0.276 (7.0) 0.266 (6.8)	0.110 (2.8)
402	0.052 (1.3)	0.112 (2.8)	0.103 (2.6) 0.096 (2.4)	0.146 (3.7) 0.140 (3.6)	0.039 (1.0) 0.033 (0.8)	0.222 (5.64) 0.219 (5.56)	0.364 (9.2)	0.0205 (0.52) 0.0195 (0.5)	0.035(0.9) 0.033 (0.8)	0.276 (7.0) 0.266 (6.8)	0.127 (3.2)
403	0.052 (1.3)	0.112 (2.8)	0.103 (2.6) 0.096 (2.4)	0.146 (3.7) 0.140 (3.6)	0.039 (1.0) 0.033 (0.8)	0.222 (5.64) 0.219 (5.56)	0.364 (9.2)	0.0205 (0.52) 0.0195 (0.5)	0.035(0.9) 0.033 (0.8)	0.276 (7.0) 0.266 (6.8)	0.127 (3.2)
404	0.052 (1.3)	0.112 (2.8)	0.103 (2.6) 0.096 (2.4)	0.146 (3.7) 0.140 (3.6)	0.039 (1.0) 0.033 (0.8)	0.222 (5.64) 0.219 (5.56)	0.364 (9.2)	0.0205 (0.52) 0.0195 (0.5)	0.035(0.9) 0.033 (0.8)	0.276 (7.0) 0.266 (6.8)	0.110 (2.8)
405	0.052 (1.3)	0.112 (2.8)	0.103 (2.6) 0.096 (2.4)	0.146 (3.7) 0.140 (3.6)	0.039 (1.0) 0.033 (0.8)	0.222 (5.64) 0.219 (5.56)	0.364 (9.2)	0.0205 (0.52) 0.0195 (0.5)	0.035(0.9) 0.033 (0.8)	0.276 (7.0) 0.266 (6.8)	0.110 (2.8)
406	0.052 (1.3)	0.112 (2.8)	0.103 (2.6) 0.096 (2.4)	0.146 (3.7) 0.140 (3.6)	0.039 (1.0) 0.033 (0.8)	0.222 (5.64) 0.219 (5.56)	0.364 (9.2)	0.0205 (0.52) 0.0195 (0.5)	0.035(0.9) 0.033 (0.8)	0.276 (7.0) 0.266 (6.8)	0.136
407	0.052 (1.3)	0.112 (2.8)	0.103 (2.6) 0.096 (2.4)	0.146 (3.7) 0.140 (3.6)	0.039 (1.0) 0.033 (0.8)	0.222 (5.64) 0.219 (5.56)	0.364 (9.2)	0.0205 (0.52) 0.0195 (0.5)	0.035(0.9) 0.033 (0.8)	0.276 (7.0) 0.266 (6.8)	0.110 (2.8)
408	0.052 (1.3)	0.112 (2.8)	0.103 (2.6) 0.096 (2.4)	0.146 (3.7) 0.140 (3.6)	0.039 (1.0) 0.033 (0.8)	0.222 (5.64) 0.219 (5.56)	0.364 (9.2)	0.0205 (0.52) 0.0195 (0.5)	0.035(0.9) 0.033 (0.8)	0.276 (7.0) 0.266 (6.8)	0.127 (3.2)

Table III

Inner Contact		Outer Contact		Insertion Tool	Extraction Tool
Basic Crimping Tool	Positioner	Basic Crimping Tool	Positioner		
M22520/2-01	M22520/2-34	M22520/31-01	M22520/31-02	M81969/8-09 or M81969/14-04	M81969/8-10 or M81969/14-04

© 2011 Glenair, Inc.

M39029/28
852-002
Size 12 Coaxial Pin

D38999 Ser. I, II, III, IV

Size #12 Coaxial Pin Contacts for MIL-DTL-38999 Series I, II, III and IV Connectors



These #12 pin contacts accept 50 ohm and 75 ohm coaxial cable. Inner contact is rated at 1 amp, the outer contact 12 amps. DWV rating is 1000 Vac rms sea level, 250 Vac at 50,000 feet. Contacts are packaged individually and shipped unassembled with instruction sheet. One contact consists of outer contact , fluorocarbon dielectric, inner contact and shield crimp sleeve. Inner and outer contacts are gold-plated copper alloy. Approved to SAE AS39029. 5000 megohm insulation resistance. Mates with: M39029/75.

B

Type	Cable Accommodation	Part Number	Military Part Number	Color Band 1st	2nd	3rd
Pin	RG174, RG316, RG179	852-002-12-211	M39029/28-211	Red	Brown	Brown
	RG180	852-002-12-409	M39029/28-409	Yellow	Black	White
	Microdot 250-4070	852-002-12-410	M39029/28-410	Yellow	Brown	Black
	Raychem 48-502, 5022E5111	852-002-12-411	M39029/28-411	Yellow	Brown	Brown
	Raychem 48-950, 9530D5117	852-002-12-412	M39029/28-412	Yellow	Brown	Red
	Raychem 762D1311, 9527A1318	852-002-12-413	M39029/28-413	Yellow	Brown	Orange
	Gore GWN1159A, M17/152-00001	852-002-12-414	M39029/28-414	Yellow	Brown	Yellow
	1S50MU-16, -20, -40, -70 (D24643/28)	852-002-12-415	M39029/28-415	Yellow	Brown	Green

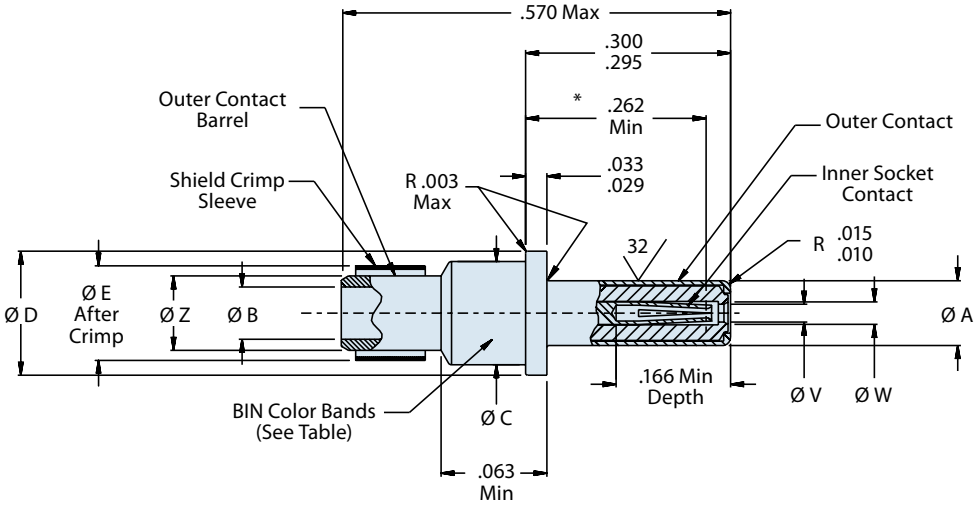

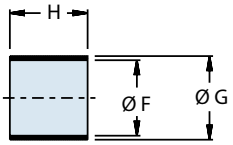

Shield Crimp Sleeve

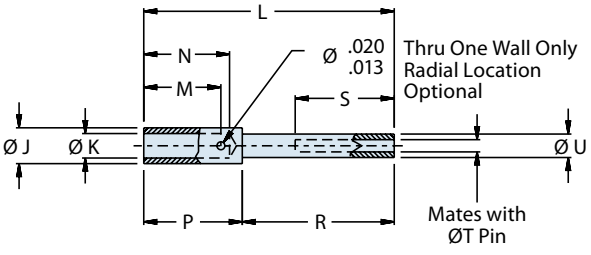

Inner Socket Contact

Material and Finish

Contact Body: Copper Alloy/Gold Plated
Center Contact: Copper Alloy/Gold Plated
Crimp Sleeve: Copper Alloy/Gold Plated
Insulator: Teflon

* Indicates point at which a square ended pin of the same basic diameter as the mating contact first engages the outer contact spring

© 2011 Glenair, Inc.

Table I											
BIN Code	ØA	ØB Min	ØC	ØD	ØE Max	ØF Min	ØG Max	H	ØJ Max	ØK Min	ØL Ref
211	0.095 (2.41) 0.093 (2.36)	.090 (2.3)	0.151 (3.84) 0.148 (3.76)	0.182 (4.62) 0.179 (4.55)	0.156 (4.0)	0.127 (3.2)	0.169 (4.3)	0.125 (3.2) 0.115 (2.9)	0.052 (1.3)	0.0225 (0.6)	0.363 (9.2)
409	0.095 (2.41) 0.093 (2.36)	.090 (2.3)	0.151 (3.84) 0.148 (3.76)	0.182 (4.62) 0.179 (4.55)	0.156 (4.0)	0.144 (3.7)	0.169 (4.3)	0.125 (3.2) 0.115 (2.9)	0.052 (1.3)	0.0225 (0.6)	0.363 (9.2)
410	0.095 (2.41) 0.093 (2.36)	.090 (2.3)	0.151 (3.84) 0.148 (3.76)	0.182 (4.62) 0.179 (4.55)	0.156 (4.0)	0.144 (3.7)	0.169 (4.3)	0.125 (3.2) 0.115 (2.9)	0.052 (1.3)	0.0355 (0.9)	0.363 (9.2)
411	0.095 (2.41) 0.093 (2.36)	.090 (2.3)	0.151 (3.84) 0.148 (3.76)	0.182 (4.62) 0.179 (4.55)	0.156 (4.0)	0.127 (3.2)	0.169 (4.3)	0.125 (3.2) 0.115 (2.9)	0.052 (1.3)	0.0355 (0.9)	0.363 (9.2)
412	0.095 (2.41) 0.093 (2.36)	.090 (2.3)	0.151 (3.84) 0.148 (3.76)	0.182 (4.62) 0.179 (4.55)	0.156 (4.0)	0.127 (3.2)	0.169 (4.3)	0.125 (3.2) 0.115 (2.9)	0.052 (1.3)	0.0225 (0.6)	0.363 (9.2)
413	0.095 (2.41) 0.093 (2.36)	.090 (2.3)	0.151 (3.84) 0.148 (3.76)	0.182 (4.62) 0.179 (4.55)	0.156 (4.0)	0.156 (4.0)	0.174 (4.4)	0.125 (3.2) 0.115 (2.9)	0.052 (1.3)	0.0270 (0.7)	0.363 (9.2)
414	0.095 (2.41) 0.093 (2.36)	.090 (2.3)	0.151 (3.84) 0.148 (3.76)	0.182 (4.62) 0.179 (4.55)	0.156 (4.0)	0.138 (3.5)	0.174 (4.4)	0.125 (3.2) 0.115 (2.9)	0.052 (1.3)	0.0225 (0.6)	0.363 (9.2)
415	0.095 (2.41) 0.093 (2.36)	.090 (2.3)	0.151 (3.84) 0.148 (3.76)	0.182 (4.62) 0.179 (4.55)	0.156 (4.0)	0.156 (4.0)	0.174 (4.4)	0.125 (3.2) 0.115 (2.9)	0.052 (1.3)	0.0355 (0.9)	0.363 (9.2)

Table I (continued)										
BIN Code	M	N Min	P	R	S Min	T	U	ØV	ØW	ØZ Max
211	0.103 (2.6) 0.096 (2.4)	0.112 (2.8)	0.146 (3.7) 0.140 (3.6)	0.222 (5.64) 0.219 (5.56)	0.156 (4.0)	0.0205 (0.52) 0.0195 (0.50)	0.035 (0.9) 0.033 (0.8)	0.027 (0.7) 0.025 (0.6)	0.058 (1.5) 0.055 (1.4)	0.110 (2.8)
409	0.103 (2.6) 0.096 (2.4)	0.112 (2.8)	0.146 (3.7) 0.140 (3.6)	0.222 (5.64) 0.219 (5.56)	0.156 (4.0)	0.0205 (0.52) 0.0195 (0.50)	0.035 (0.9) 0.033 (0.8)	0.027 (0.7) 0.025 (0.6)	0.058 (1.5) 0.055 (1.4)	0.127 (3.2)
410	0.103 (2.6) 0.096 (2.4)	0.112 (2.8)	0.146 (3.7) 0.140 (3.6)	0.222 (5.64) 0.219 (5.56)	0.156 (4.0)	0.0205 (0.52) 0.0195 (0.50)	0.035 (0.9) 0.033 (0.8)	0.027 (0.7) 0.025 (0.6)	0.058 (1.5) 0.055 (1.4)	0.127 (3.2)
411	0.103 (2.6) 0.096 (2.4)	0.112 (2.8)	0.146 (3.7) 0.140 (3.6)	0.222 (5.64) 0.219 (5.56)	0.156 (4.0)	0.0205 (0.52) 0.0195 (0.50)	0.035 (0.9) 0.033 (0.8)	0.027 (0.7) 0.025 (0.6)	0.058 (1.5) 0.055 (1.4)	0.110 (2.8)
412	0.103 (2.6) 0.096 (2.4)	0.112 (2.8)	0.146 (3.7) 0.140 (3.6)	0.222 (5.64) 0.219 (5.56)	0.156 (4.0)	0.0205 (0.52) 0.0195 (0.50)	0.035 (0.9) 0.033 (0.8)	0.027 (0.7) 0.025 (0.6)	0.058 (1.5) 0.055 (1.4)	0.110 (2.8)
413	0.103 (2.6) 0.096 (2.4)	0.112 (2.8)	0.146 (3.7) 0.140 (3.6)	0.222 (5.64) 0.219 (5.56)	0.156 (4.0)	0.0205 (0.52) 0.0195 (0.50)	0.035 (0.9) 0.033 (0.8)	0.027 (0.7) 0.025 (0.6)	0.058 (1.5) 0.055 (1.4)	0.136 (3.5)
414	0.103 (2.6) 0.096 (2.4)	0.112 (2.8)	0.146 (3.7) 0.140 (3.6)	0.222 (5.64) 0.219 (5.56)	0.156 (4.0)	0.0205 (0.52) 0.0195 (0.50)	0.035 (0.9) 0.033 (0.8)	0.027 (0.7) 0.025 (0.6)	0.058 (1.5) 0.055 (1.4)	0.110 (2.8)
415	0.103 (2.6) 0.096 (2.4)	0.112 (2.8)	0.146 (3.7) 0.140 (3.6)	0.222 (5.64) 0.219 (5.56)	0.156 (4.0)	0.0205 (0.52) 0.0195 (0.50)	0.035 (0.9) 0.033 (0.8)	0.027 (0.7) 0.025 (0.6)	0.058 (1.5) 0.055 (1.4)	0.127 (3.2)

Table III					
Inner Contact		Outer Contact		Insertion Tool	Extraction Tool
Basic Crimping Tool	Positioner	Basic Crimping Tool	Positioner		
M22520/2-01	M22520/2-34	M22520/31-01	M22520/31-02	M81969/8-09 or M81969/14-04	M81969/8-10 or M81969/14-04

© 2011 Glenair, Inc.

M39029/75
852-003
Size 12 Coaxial Socket

D38999 Ser. I, III, IV

Size #12 Coaxial Socket Contacts for MIL-DTL-38999 Series I, III and IV Connectors



These #12 socket contacts accept 50 ohm and 75 ohm coaxial cable. Inner contact is rated at 1 amp, the outer contact 12 amps. DWV rating is 1000 Vac rms sea level, 250 Vac at 50,000 feet. Contacts are packaged individually and shipped unassembled with instruction sheet. One contact consists of outer contact , fluorocarbon dielectric, inner contact and shield crimp sleeve. Inner and outer contacts are gold-plated copper alloy. Approved to SAE AS39029. 5000 megohm insulation resistance. Mates with: M39029/28.

B

Type	Cable Accommodation	Part Number	Military Part Number	Color Band 1st	2nd	3rd
Socket	M17/119-RG174, M17/113-RG316, M17/094-RG179, Times AA3248, Teledyne 11299, Haveg 8100207, Thermax 75-738-BCCWXE, Tensolite 3088/L707YX-1	852-003-12-416	M39029/75-416	Yellow	Brown	Blue
	M17/095-RG, Raychem 9527D1514-2L, Raychem 9528A1318, Microdot 293-3922	852-003-12-417	M39029/75-417	Yellow	Brown	Violet
	Microdot 250-4070	852-003-12-418	M39029/75-418	Yellow	Brown	Gray
	Raychem 48-502, 5022E5111	852-003-12-419	M39029/75-419	Yellow	Brown	White
	Raychem 48-950, 9530D5117	852-003-12-420	M39029/75-420	Yellow	Red	Black
	Raychem 7624D1311, 9527A1318	852-003-12-421	M39029/75-421	Yellow	Red	Brown
	Gore GWN1159A, M17/152-00001	852-003-12-422	M39029/75-422	Yellow	Red	Red
	1S50MU-16, -20, -40, -70 (D24643/28)	852-003-12-423	M39029/75-423	Yellow	Red	Orange

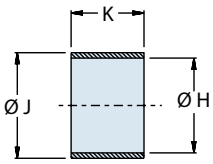

Shield Crimp Sleeve

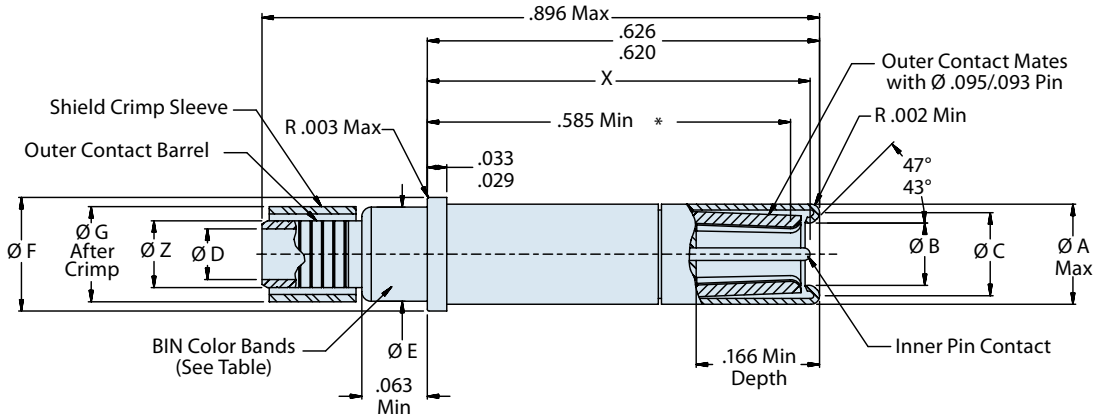

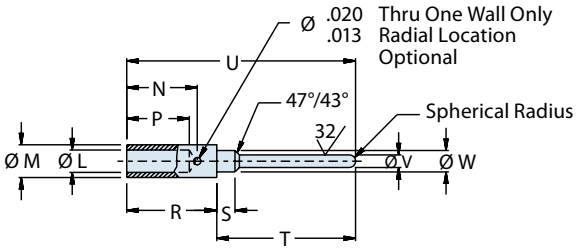

Inner Pin Contact

Material and Finish

Contact Body: Copper Alloy/Gold Plated
Hood: Stainless Steel/Passivated
Center Contact: Copper Alloy/Gold Plated
Crimp Sleeve: Copper Alloy/Gold Plated
Insulator: Teflon

* Indicates point at which a square ended pin of the same basic diameter as the mating contact first engages the outer contact spring

© 2011 Glenair, Inc.

Table I

BIN Code	ØA Max	ØB	ØC	ØD Max	ØE	ØF	ØG Max	ØH Min	ØJ Max	K	ØL Min
416	0.161 (4.1)	.100 (2.54) .097 (2.46)	.123 (3.1) .118 (3.0)	.090 (2.3)	.151 (3.84) .148 (3.76)	.182 (4.6) .179 (4.5)	.156 (4.0)	.127 (3.2)	.169 (4.3)	.125 (3.2) .115 (2.9)	.0225 (.57)
417	0.161 (4.1)	.100 (2.54) .097 (2.46)	.123 (3.1) .118 (3.0)	.108 (2.7)	.151 (3.84) .148 (3.76)	.182 (4.6) .179 (4.5)	.156 (4.0)	.144 (3.7)	.169 (4.3)	.125 (3.2) .115 (2.9)	.0225 (.57)
418	0.161 (4.1)	.100 (2.54) .097 (2.46)	.123 (3.1) .118 (3.0)	.108 (2.7)	.151 (3.84) .148 (3.76)	.182 (4.6) .179 (4.5)	.156 (4.0)	.144 (3.7)	.169 (4.3)	.125 (3.2) .115 (2.9)	.0355 (.90)
419	0.161 (4.1)	.100 (2.54) .097 (2.46)	.123 (3.1) .118 (3.0)	.090 (2.3)	.151 (3.84) .148 (3.76)	.182 (4.6) .179 (4.5)	.156 (4.0)	.127 (3.2)	.169 (4.3)	.125 (3.2) .115 (2.9)	.0355 (.90)
420	0.161 (4.1)	.100 (2.54) .097 (2.46)	.123 (3.1) .118 (3.0)	.090 (2.3)	.151 (3.84) .148 (3.76)	.182 (4.6) .179 (4.5)	.156 (4.0)	.127 (3.2)	.169 (4.3)	.125 (3.2) .115 (2.9)	.0225 (.57)
421	0.161 (4.1)	.100 (2.54) .097 (2.46)	.123 (3.1) .118 (3.0)	0.117 (3.0)	.151 (3.84) .148 (3.76)	.182 (4.6) .179 (4.5)	.156 (4.0)	.156 (4.0)	0.174 (4.4)	.125 (3.2) .115 (2.9)	.0270 (.70)
422	0.161 (4.1)	.100 (2.54) .097 (2.46)	.123 (3.1) .118 (3.0)	.090 (2.3)	.151 (3.84) .148 (3.76)	.182 (4.6) .179 (4.5)	.156 (4.0)	.138 (3.5)	0.174 (4.4)	.125 (3.2) .115 (2.9)	.0225 (.57)
423	0.161 (4.1)	.100 (2.54) .097 (2.46)	.123 (3.1) .118 (3.0)	.108 (2.7)	.151 (3.84) .148 (3.76)	.182 (4.6) .179 (4.5)	.156 (4.0)	.156 (4.0)	0.174 (4.4)	.125 (3.2) .115 (2.9)	.0355 (9.0)

Table I (Continued)

BIN Code	ØM Max	N Min	P	R	S	T	U Ref	ØV	ØW	X	ØZ Max
416	.052 (1.3)	.112 (2.8)	.103 (2.6) .096 (2.4)	.146 (3.7) .140 (3.6)	.039 (1.0) .033 (0.8)	.222 (5.64) .219 (5.56)	.3635 (9.2)	.0205 (.52) .0195 (.50)	.035 (0.9) .033 (0.8)	.613 (15.6) .603 (15.3)	.110 (2.8)
417	.052 (1.3)	.112 (2.8)	.103 (2.6) .096 (2.4)	.146 (3.7) .140 (3.6)	.039 (1.0) .033 (0.8)	.222 (5.64) .219 (5.56)	.3635 (9.2)	.0205 (.52) .0195 (.50)	.035 (0.9) .033 (0.8)	.613 (15.6) .603 (15.3)	.127 (3.2)
418	.052 (1.3)	.112 (2.8)	.103 (2.6) .096 (2.4)	.146 (3.7) .140 (3.6)	.039 (1.0) .033 (0.8)	.222 (5.64) .219 (5.56)	.3635 (9.2)	.0205 (.52) .0195 (.50)	.035 (0.9) .033 (0.8)	.613 (15.6) .603 (15.3)	.127 (3.2)
419	.052 (1.3)	.112 (2.8)	.103 (2.6) .096 (2.4)	.146 (3.7) .140 (3.6)	.039 (1.0) .033 (0.8)	.222 (5.64) .219 (5.56)	.3635 (9.2)	.0205 (.52) .0195 (.50)	.035 (0.9) .033 (0.8)	.613 (15.6) .603 (15.3)	.110 (2.8)
420	.052 (1.3)	.112 (2.8)	.103 (2.6) .096 (2.4)	.146 (3.7) .140 (3.6)	.039 (1.0) .033 (0.8)	.222 (5.64) .219 (5.56)	.3635 (9.2)	.0205 (.52) .0195 (.50)	.035 (0.9) .033 (0.8)	.613 (15.6) .603 (15.3)	.110 (2.8)
421	.052 (1.3)	.112 (2.8)	.103 (2.6) .096 (2.4)	.146 (3.7) .140 (3.6)	.039 (1.0) .033 (0.8)	.222 (5.64) .219 (5.56)	.3635 (9.2)	.0205 (.52) .0195 (.50)	.035 (0.9) .033 (0.8)	.613 (15.6) .603 (15.3)	.136 (3.5)
422	.052 (1.3)	.112 (2.8)	.103 (2.6) .096 (2.4)	.146 (3.7) .140 (3.6)	.039 (1.0) .033 (0.8)	.222 (5.64) .219 (5.56)	.3635 (9.2)	.0205 (.52) .0195 (.50)	.035 (0.9) .033 (0.8)	.613 (15.6) .603 (15.3)	.110 (2.8)
423	.052 (1.3)	0.355 (9.0)	.103 (2.6) .096 (2.4)	.146 (3.7) .140 (3.6)	.039 (1.0) .033 (0.8)	.222 (5.64) .219 (5.56)	.3635 (9.2)	.0205 (.52) .0195 (.50)	.035 (0.9) .033 (0.8)	.613 (15.6) .603 (15.3)	.127 (3.2)

Table III

Inner Contact		Outer Contact		Insertion Tool	Extraction Tool
Basic Crimping Tool	Positioner	Basic Crimping Tool	Positioner		
M22520/2-01	M22520/2-34	M22520/31-01	M22520/31-02	M81969/8-09 or M81969/14-04; DAK95-12B or DAK264-12	M81969/8-10 or M81969/14-04; DRK95-12B or DRK264-12

© 2011 Glenair, Inc.

M39029/102
852-004
Size 12 Coaxial Pin

D38999 Ser. I, II, III, IV

Size #12 Coaxial Pin Contacts for MIL-DTL-38999 Series I, II, III and IV Connectors



These contacts offer improved frequency response compared to standard coaxial contacts. VSWR is 1.32:1 at 3GHz . Nominal impedance is 50 ohms. Insertion loss at 3GHz is 0.20 dB maximum. Inner contact is rated at 1 amp, the outer contact 12 amps. DWV voltage rating is 1000 Vac rms sea level, 250 Vac at 50,000 feet. Contacts are packaged individually and shipped unassembled with instruction sheet. Inner and outer contacts are gold-plated copper alloy. 5000 megohm insulation resistance.

Type	Cable Accommodation	Part Number	Military Part Number	Color Band 1st	2nd	3rd
Pin	M17/113-RG316 M17/094-RG179	852-004-12-558	M39029/102-558	Green	Green	Gray

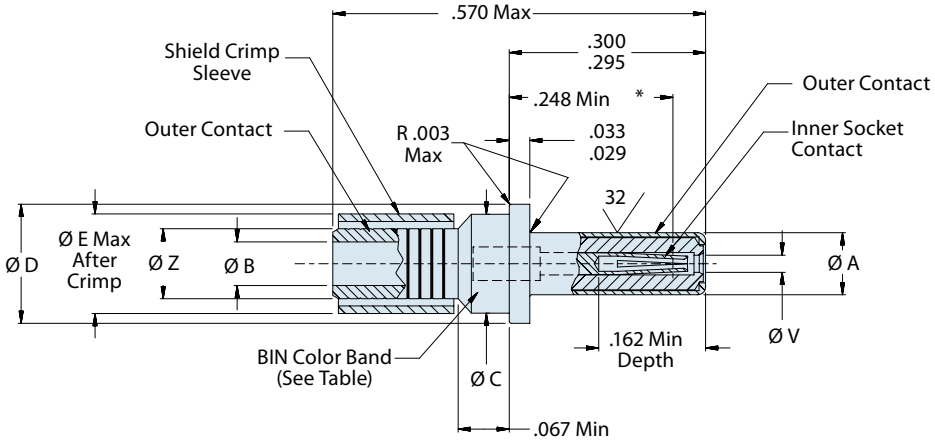

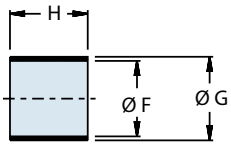

Shield Crimp Sleeve

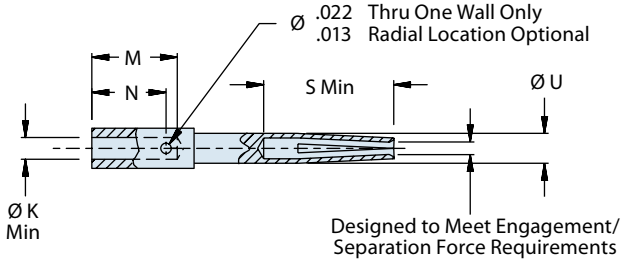

Inner Socket Contact

© 2011 Glenair, Inc.

Table I							
BIN Code	ØA	ØB Min	ØC	ØD	ØE Max	ØF Min	ØG Max
558	.095 (2.41) .093 (2.39)	.066 (1.7)	.151 (3.84) .148 (3.76)	.182 (4.62) .179 (4.55)	.156 (4.0)	.127 (3.2)	.169 (4.3)

Table I (continued)								
BIN Code	H	ØK Min	M	N	S Min	U	ØV	ØZ Max
558	.180 (4.6) .170 (4.3)	.022 (.6)	.088 (2.2) .063 (1.6)	.100 (2.5) .084 (2.1)	.135 (3.4)	.035 (.9) .031 (.8)	.027 (.7) .025 (.6)	.110 (2.8)

Table III					
Inner Contact		Outer Contact		Insertion Tool	Extraction Tool
Basic Crimping Tool	Positioner	Basic Crimping Tool	Die		
Daniels MH992	Glenair 859-006 or K1721	M22520/5-01	M22520/5-03	M81969/8-09 or M81969/14-04	M81969/8-10 or M81969/14-04

Material and Finish

Contact Body: Copper Alloy/Gold Plated
Hood: Stainless Steel/Passivated
Center Contact: Copper Alloy/Gold Plated
Crimp Sleeve: Copper Alloy/Gold Plated
Insulator: Teflon

* Indicates point at which a square ended pin of the same basic diameter as the mating contact first engages the outer contact spring

© 2011 Glenair, Inc.

M39029/103
852-005
Size 12 Coaxial Socket

D38999
Ser. I, III, IV

Size #12 Coaxial Socket Contacts for MIL-DTL-38999 Series I, III and IV Connectors



These contacts offer improved frequency response compared to standard coaxial contacts. VSWR is 1.32:1 at 3GHz . Nominal impedance is 50 ohms. Insertion loss at 3GHz is 0.20 dB maximum. Inner contact is rated at 1 amp, the outer contact 12 amps. DWV voltage rating is 1000 Vac rms sea level, 250 Vac at 50,000 feet. Contacts are packaged individually and shipped unassembled with instruction sheet. Inner and outer contacts are gold-plated copper alloy. 5000 megohm insulation resistance.

Type	Cable Accommodation	Part Number	Military Part Number	Color Band 1st	2nd	3rd
Socket	M17/113-RG316 M17/094-RG179	852-005-12-559	M39029/103-559	Green	Green	White

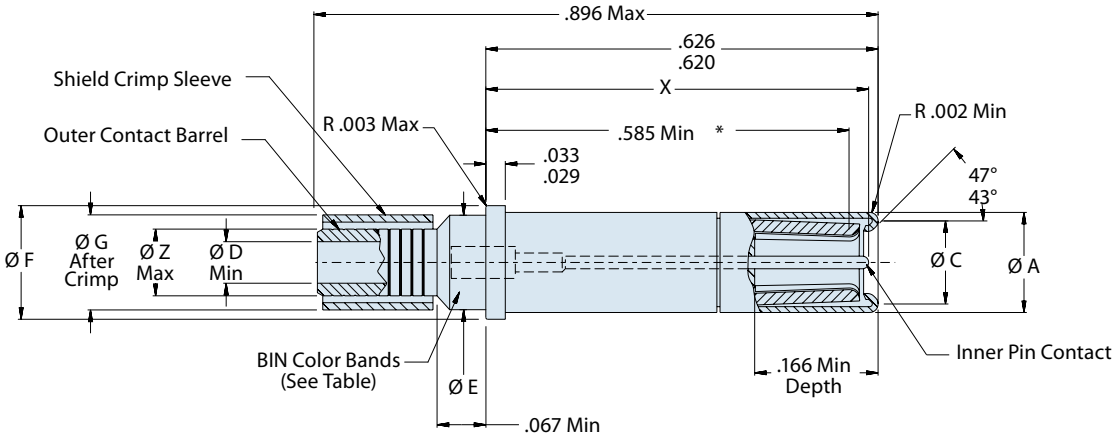

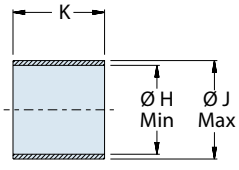

Shield Crimp Sleeve

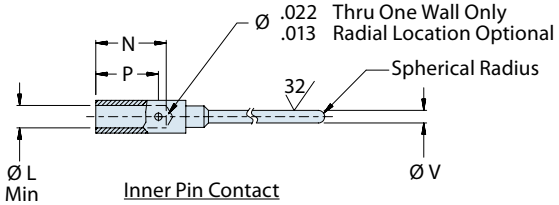

Inner Pin Contact

© 2011 Glenair, Inc.

Table I								
BIN Code	ØA	ØC	ØD	ØE	ØF	ØG Max	ØH Min	ØJ Max
559	.160 (4.06) .158 (4.01)	.123 (3.1) .118 (3.0)	.069 (1.8) .066 (1.7)	.151 (3.84) .148 (3.76)	.182 (4.62) .179 (4.55)	.156 (4.0)	.127 (3.2)	.169 (4.3)

Table I (continued)							
BIN Code	K	ØL Min	N	P	ØV	X	ØZ Max
559	.180 (4.6) .170 (4.3)	.022 (.6)	.100 (2.5) .084 (2.1)	.088 (2.2) .063 (1.6)	.0205 (.52) .0195 (.50)	.613 (15.6) .603 (15.3)	.110 (2.8)

Table III					
Inner Contact		Outer Contact		Insertion Tool	Extraction Tool
Basic Crimping Tool	Positioner	Basic Crimping Tool	Die		
Daniels MH992	M22520/2-34	M22520/5-01	M22520/5-03	M81969/8-09 or M81969/14-04	M81969/8-10 or M81969/14-04
Note: May be crimped or soldered					

Material and Finish

Contact Body: Copper Alloy/Gold Plated
Hood: Stainless Steel/Passivated
Center Contact: Copper Alloy/Gold Plated
Crimp Sleeve: Copper Alloy/Gold Plated
Insulator: Teflon

* Indicates point at which a square ended pin of the same basic diameter as the mating contact first engages the outer contact spring

© 2012 Glenair, Inc.

M39029/59
852-006
Size 8 Coaxial Socket

D38999 Ser. I, III, IV

Size #8 Coaxial Socket Contacts for MIL-DTL-38999 Series I, III and IV Connectors



These #8 socket contacts accept 95 ohm coaxial cable. Inner contact is rated at 1 amp, the outer contact 12 amps. DWV rating is 1,300 Vac rms sea level, 250 Vac at 50,000 feet. Contacts are packaged individually and shipped unassembled with instruction sheet. One contact consists of outer contact , fluorocarbon dielectric, inner contact and shield crimp sleeve. Inner and outer contacts are gold-plated copper alloy. Approved to SAE AS39029. 5000 megohm insulation resistance. Mates with: M39029/60.

Type	Cable Accommodation	Part Number	Military Part Number	Color Band 1st	2nd	3rd
Socket	M17/095-RG180	852-006-08-366	M39029/59-366	Orange	Blue	Blue

Table II - Tools

Insertion Tool	Extraction Tool	Insulator Expander Tool (crimp only)
None Required - Hand Installed	MIL-I-81969/14-06	11-10134

Table III - Tools (contact)

Center Contact Tooling		Shield Crimp Sleeve Tooling	
Basic Crimping Tool	Contact Positioner	Basic Crimping Tool	Die Part or Identifying No.
M22520/2-01	M22520/2-31	M22520/5-01 M22520/10-1	M22520/5-05 Die Closure B M22520/10-07 Die Closure B

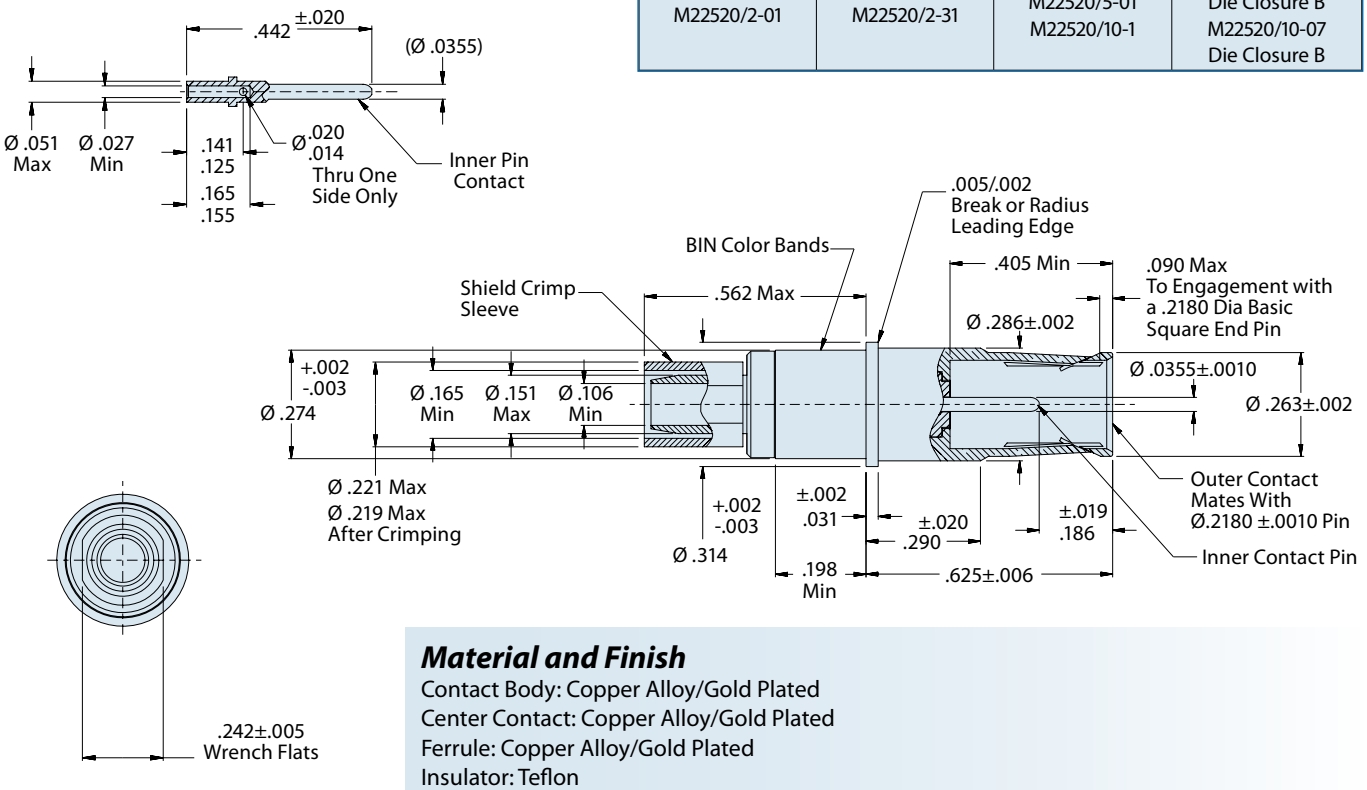

Material and Finish

Contact Body: Copper Alloy/Gold Plated
Center Contact: Copper Alloy/Gold Plated
Ferrule: Copper Alloy/Gold Plated
Insulator: Teflon

© 2011 Glenair, Inc.

D38999
Ser. I, III, IV

Size #8 Coaxial Pin Contacts for MIL-DTL-38999 Series I, III and IV Connectors



These #8 pin contacts accept 95 ohm coaxial cable. Inner contact is rated at 1 amp, the outer contact 12 amps. DWV rating is 1,300 Vac rms sea level, 250 Vac at 50,000 feet. Contacts are packaged individually and shipped unassembled with instruction sheet. One contact consists of outer contact , fluorocarbon dielectric, inner contact and shield crimp sleeve. Inner and outer contacts are gold-plated copper alloy. Approved to SAE AS39029. 5000 megohm insulation resistance. Mates with: M39029/60.

Type	Cable Accommodation	Part Number	Military Part Number	Color Band 1st	2nd	3rd
Socket	M17/095-RG180	852-007-08-367	M39029/60-367	Orange	Blue	Violet

Table II - Tools

Insertion Tool	Extraction Tool	Insulator Expander Tool (crimp only)
None Required - Hand Installed	MIL-I-81969/14-06	11-10134

Table III - Tools (contact)

Center Contact Tooling		Shield Crimp Sleeve Tooling	
Basic Crimping Tool	Contact Positioner	Basic Crimping Tool	Die Part or Identifying No.
M22520/2-01	M22520/2-31	M22520/5-01 M22520/10-1	M22520/5-05 Die Closure B M22520/10-07 Die Closure B

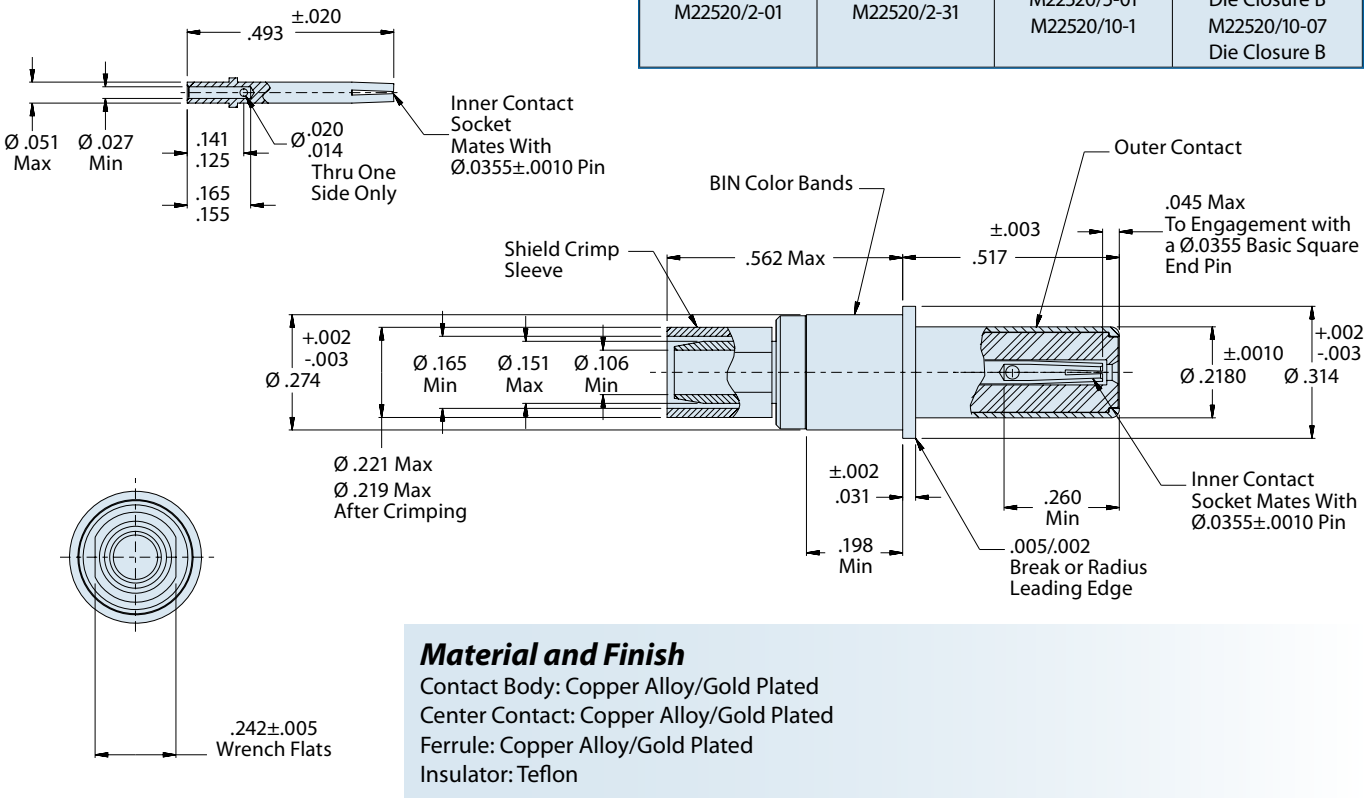

Material and Finish

Contact Body: Copper Alloy/Gold Plated
Center Contact: Copper Alloy/Gold Plated
Ferrule: Copper Alloy/Gold Plated
Insulator: Teflon

© 2011 Glenair, Inc.

M39029/76
852-008
Size 16 Coaxial Pin

D38999 Ser. I, II, III, IV

Size #16 Coaxial Pin Contacts for MIL-DTL-38999 Series I, II, III and IV Connectors



These #16 pin contacts accept 50 ohm and 75 ohm coaxial cable. Inner contact is rated at 1 amp, the outer contact 12 amps. DWV rating is 800 Vac rms sea level, 250 Vac at 50,000 feet. Contacts are packaged individually and are unassembled with instruction sheet. One contact consists of outer contact , fluorocarbon dielectric, inner contact and shield crimp sleeve. Inner and outer contacts are gold-plated copper alloy. Approved to SAE AS39029. VSWR rating 1.5:1 maximum up to 700 MHz. 5000 megohm insulation resistance. Mates with: M39029/77 and /78.

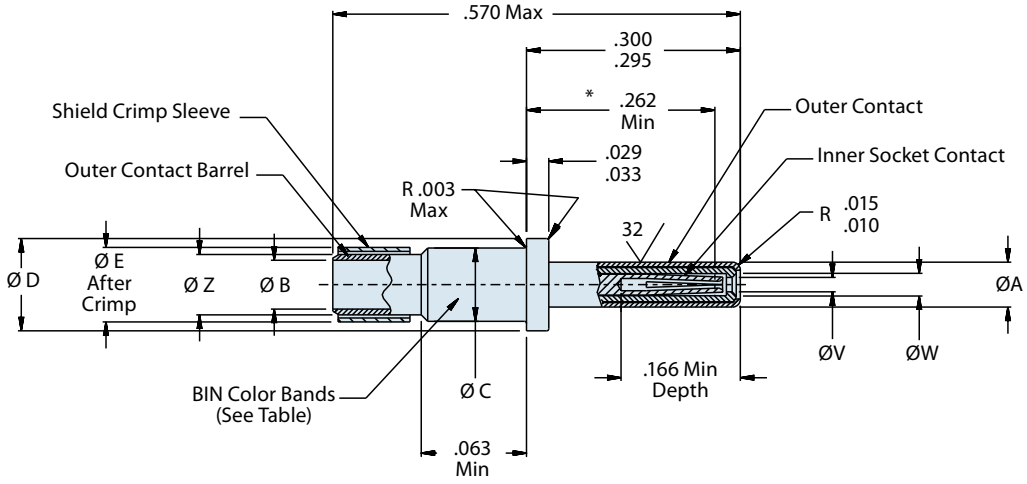

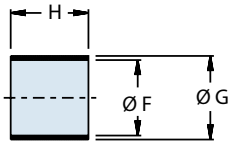

Shield Crimp Sleeve

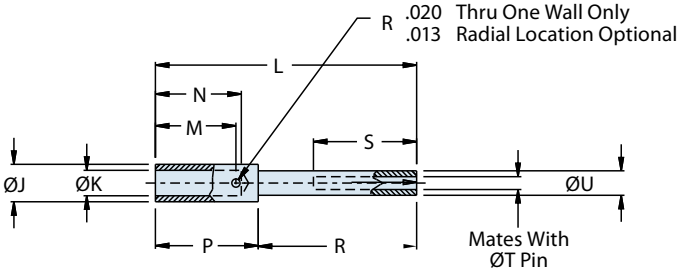

Inner Socket Contact

Material and Finish

Contact Body: Copper Alloy/Gold Plated
Center Contact: Copper Alloy/Gold Plated
Crimp Sleeve: Copper Alloy/Gold Plated
Insulator: Teflon

* Indicates point at which a square ended pin of the same basic diameter as the mating contact first engages the outer contact spring

© 2011 Glenair, Inc.

Type	Cable Accommodation	Part Number	Military Part Number	Color Band 1st	2nd	3rd
Pin	M17/119-RG174, M17/113-RG316, M17/094-RG179, Times AA3248, Teledyne 11299, Haveg 8100207, Thermax 75-738-BCCWXE, Tensolite 3088/L707YX-1	852-008-16-424	M39029/76-424	Yellow	Red	Yellow
	M19/093-RG178	852-008-16-425	M39029/76-425	Yellow	Red	Green
	Haveg 61-02051, Revere WH95623	852-008-16-426	M39029/76-426	Yellow	Red	Blue
	Haveg 30-00761, Haveg 30-02024, Haveg 30-02033, Tensolite 24713/A955KK1, Tensolite 26723/A955KK1	852-008-16-427	M39029/76-427	Yellow	Red	Violet

Table I

BIN Code	ØA	ØB Min	ØC	ØD	ØE Max	ØF Min	ØG Max	H	ØJ Max	ØK Min	ØL Ref
424	.0635 (1.61) .0615 (1.56)	.0670 (1.7018)	.103 (2.62) .101 (2.57)	.130 (3.3) .127 (3.2)	0.108 (2.7)	0.105 (2.7)	0.120 (3.0)	.105 (2.7) .095 (2.4)	0.046 (1.2)	.0210 (0.5)	.392 (10.0)
425	.0635 (1.61) .0615 (1.56)	.0575 (1.4605)	.103 (2.62) .101 (2.57)	.130 (3.3) .127 (3.2)	0.108 (2.7)	0.094 (2.4)	0.120 (3.0)	.105 (2.7) .095 (2.4)	0.046 (1.2)	.0210 (0.5)	.392 (10.0)
426	.0635 (1.61) .0615 (1.56)	.0670 (1.7018)	.103 (2.62) .101 (2.57)	.130 (3.3) .127 (3.2)	0.108 (2.7)	0.105 (2.7)	0.120 (3.0)	.105 (2.7) .095 (2.4)	0.052 (1.3)	.0355 (0.9)	.392 (10.0)
427	.0635 (1.61) .0615 (1.56)	.0575 (1.4605)	.103 (2.62) .101 (2.57)	.130 (3.3) .127 (3.2)	0.108 (2.7)	0.094 (2.4)	0.120 (3.0)	.105 (2.7) .095 (2.4)	0.046 (1.2)	.0270 (0.7)	.392 (10.0)

Table I (continued)

BIN Code	M	N Min	P	R	S Min	T	U	ØV	ØW	ØZ Max
424	.094 (2.4) .087 (2.2)	0.103 (2.6)	.125 (3.2) .119 (3.0)	.271 (6.9) .269 (6.8)	0.156 (4.0)	.0155 (.39) .0145 (.37)	.030 (.8) .028 (.7)	.022 (.6) .018 (.5)	.041 (1.04) .038 (.097)	0.085 2.2
425	.094 (2.4) .087 (2.2)	0.103 (2.6)	.125 (3.2) .119 (3.0)	.271 (6.9) .269 (6.8)	0.156 (4.0)	.0155 (.39) .0145 (.37)	.030 (.8) .028 (.7)	.022 (.6) .018 (.5)	.041 (1.04) .038 (.097)	0.076 1.9
426	.094 (2.4) .087 (2.2)	0.103 (2.6)	.125 (3.2) .119 (3.0)	.271 (6.9) .269 (6.8)	0.156 (4.0)	.0155 (.39) .0145 (.37)	.030 (.8) .028 (.7)	.022 (.6) .018 (.5)	.041 (1.04) .038 (.097)	0.085 2.2
427	.094 (2.4) .087 (2.2)	0.103 (2.6)	.125 (3.2) .119 (3.0)	.271 (6.9) .269 (6.8)	0.156 (4.0)	.0155 (.39) .0145 (.37)	.030 (.8) .028 (.7)	.022 (.6) .018 (.5)	.041 (1.04) .038 (.097)	0.076 1.9

Table III

Inner Contact		Outer Contact		Insertion Tool	Extraction Tool
Basic Crimping Tool	Positioner	Basic Crimping Tool	Positioner		
M22520/2-01	M22520/2-35	M22520/4-01	M22520/4-02	M81969/8-07 or M81969/14-03	M81969/8-08 or M81969/14-03

© 2011 Glenair, Inc.

M39029/77
852-009
Size 16 Coaxial Socket

D38999 Ser. I, III, IV

Size #16 Coaxial Socket Contacts for MIL-DTL-38999 Series I, III and IV Connectors



These #16 socket contacts accept 50 ohm and 75 ohm coaxial cable. Inner contact is rated at 1 amp, the outer contact 12 amps. DWV rating is 800 Vac rms sea level, 250 Vac at 50,000 feet. Contacts are packaged individually and are unassembled with instruction sheet. One contact consists of outer contact , fluorocarbon dielectric, inner contact and shield crimp sleeve. Inner and outer contacts are gold-plated copper alloy. Approved to SAE AS39029. VSWR rating 1.5:1 maximum up to 700 MHz. 5000 megohm insulation resistance. Mates with: M39029/76.

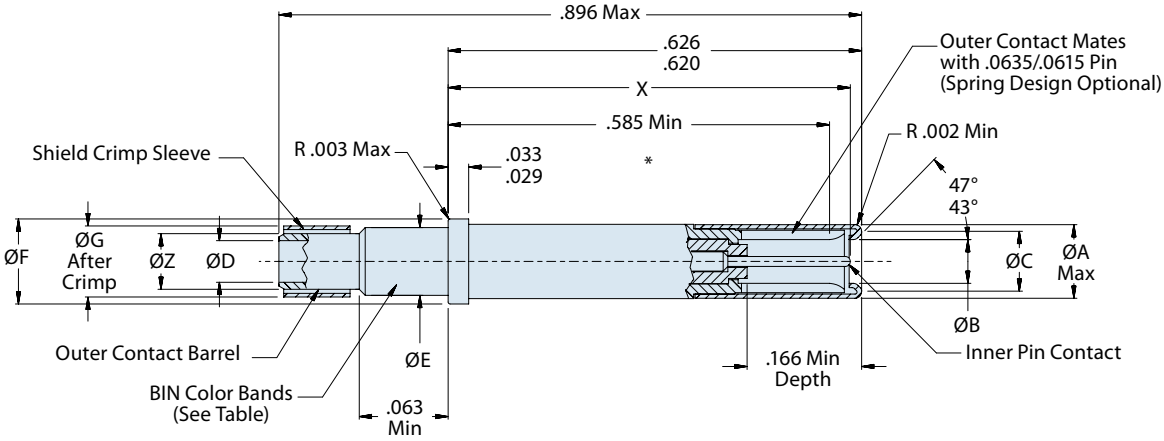

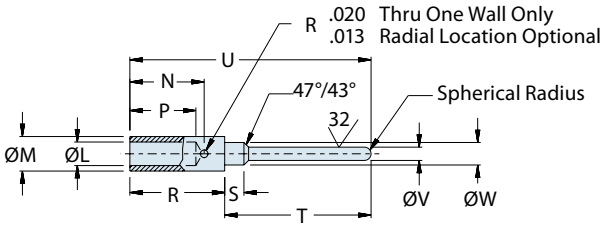

Inner Pin Contact

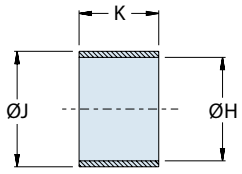

Shield Crimp Sleeve

Material and Finish

Contact Body: Copper Alloy/Gold Plated
Hood: Stainless Steel/Passivated
Center Contact: Copper Alloy/Gold Plated
Crimp Sleeve: Copper Alloy/Gold Plated
Insulator: Teflon

* Indicates point at which a square ended pin of the same basic diameter as the mating contact first engages the outer contact spring

© 2011 Glenair, Inc.

Type	Cable Accommodation	Part Number	Military Part Number	Color Band 1st	2nd	3rd
Socket	M17/119-RG174, M17/113-RG316, M17/094-RG179, Times AA3248, Teledyne 11299, Haveg 8100207, Thermax 75-738-BCCWXE, Tensolite 30888/L707YX-1	852-009-16-428	M39029/77-428	Yellow	Red	Gray
	M17/093-RG178	852-009-16-429	M39029/77-429	Yellow	Red	White
	Haveg 61-02051, Revere WH95623	852-009-16-430	M39029/77-430	Yellow	Orange	Black
	Haveg 30-00761, Haveg 30-02024, Haveg 30-02033, Tensolite 24713/A955KK1, Tensolite 26723/A955KK1	852-009-16-431	M39029/77-431	Yellow	Orange	Brown

Table I

BIN Code	ØA Max	ØB	ØC	ØD Min	ØE	ØF	ØG Max	ØH Min	ØJ Max	K	ØL Min
428	.113 (2.9)	.068 (1.73) .065 (1.65)	.089 (2.3) .084 (2.1)	.670 (17.0)	.103 (2.62) .101 (2.57)	.130 (3.3) .127 (3.2)	.108 (2.7)	.105 (2.7)	.120 (3.0)	.105 (2.7) .095 (2.4)	.0210 (0.5)
429	.113 (2.9)	.068 (1.73) .065 (1.65)	.089 (2.3) .084 (2.1)	0.575 (14.6)	.103 (2.62) .101 (2.57)	.130 (3.3) .127 (3.2)	.108 (2.7)	.094 (2.4)	.120 (3.0)	.105 (2.7) .095 (2.4)	.0210 (0.5)
430	.113 (2.9)	.068 (1.73) .065 (1.65)	.089 (2.3) .084 (2.1)	.670 (17.0)	.103 (2.62) .101 (2.57)	.130 (3.3) .127 (3.2)	.108 (2.7)	.105 (2.7)	.120 (3.0)	.105 (2.7) .095 (2.4)	.0355 (0.9)
431	.113 (2.9)	.068 (1.73) .065 (1.65)	.089 (2.3) .084 (2.1)	0.575 (14.6)	.103 (2.62) .101 (2.57)	.130 (3.3) .127 (3.2)	.108 (2.7)	.094 (2.4)	.120 (3.0)	.105 (2.7) .095 (2.4)	.0270 (0.7)

Table I (continued)

BIN Code	ØM Max	N Min	P	R	S	T	U Ref	ØV	ØW	X	ØZ Max
428	.046 (1.2)	.103 (2.6)	.094 (2.4) .087 (2.2)	.125 (3.2) .119 (3.0)	.079 (2.0) .073 (1.9)	.269 (6.83) .266 (6.76)	.3895 (9.9)	.0155 (.39) .0145 (.37)	.030 (0.8) .028 (0.7)	.611 (15.5) .601 (15.3)	.085 (2.2)
429	.046 (1.2)	.103 (2.6)	.094 (2.4) .087 (2.2)	.125 (3.2) .119 (3.0)	.079 (2.0) .073 (1.9)	.269 (6.83) .266 (6.76)	.3895 (9.9)	.0155 (.39) .0145 (.37)	.030 (0.8) .028 (0.7)	.611 (15.5) .601 (15.3)	.076 (1.9)
430	0.052 (1.3)	.103 (2.6)	.094 (2.4) .087 (2.2)	.125 (3.2) .119 (3.0)	.079 (2.0) .073 (1.9)	.269 (6.83) .266 (6.76)	.3895 (9.9)	.0155 (.39) .0145 (.37)	.030 (0.8) .028 (0.7)	.611 (15.5) .601 (15.3)	.085 (2.2)
431	.046 (1.2)	.103 (2.6)	.094 (2.4) .087 (2.2)	.125 (3.2) .119 (3.0)	.079 (2.0) .073 (1.9)	.269 (6.83) .266 (6.76)	.3895 (9.9)	.0155 (.39) .0145 (.37)	.030 (0.8) .028 (0.7)	.611 (15.5) .601 (15.3)	.076 (1.9)

Table III

Inner Contact		Outer Contact		Insertion Tool	Extraction Tool
Basic Crimping Tool	Positioner	Basic Crimping Tool	Positioner		
M22520/2-01	M22520/2-35	M22520/4-01	M22520/4-02	M81969/8-07 or M81969/14-03	M81969/8-08 or M81969/14-03

© 2011 Glenair, Inc.

M39029/78
852-010
Size 16 Coaxial Socket

D38999 Series II

Size #16 Coaxial Socket Contacts for MIL-DTL-38999 Series II Connectors



These #16 socket contacts accept 50 ohm and 75 ohm coaxial cable. Inner contact is rated at 1 amp, the outer contact 12 amps. DWV rating is 800 Vac rms sea level, 250 Vac at 50,000 feet. Contacts are packaged individually and are unassembled with instruction sheet. One contact consists of outer contact , fluorocarbon dielectric, inner contact and shield crimp sleeve. Inner and outer contacts are gold-plated copper alloy. Approved to SAE AS39029. VSWR rating 1.5:1 maximum up to 700 MHz. 5000 megohm insulation resistance. Mates with: M39029/76.

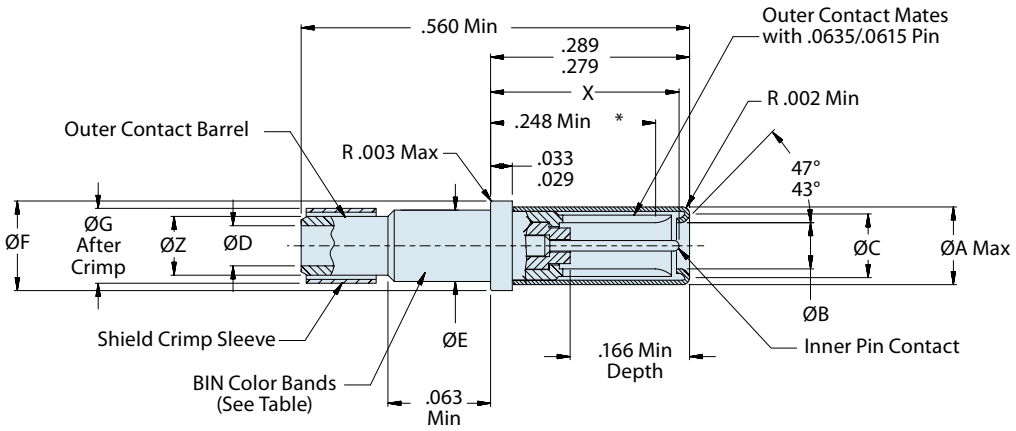

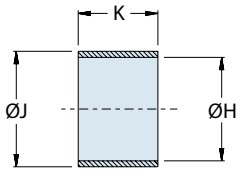

Shield Crimp Sleeve

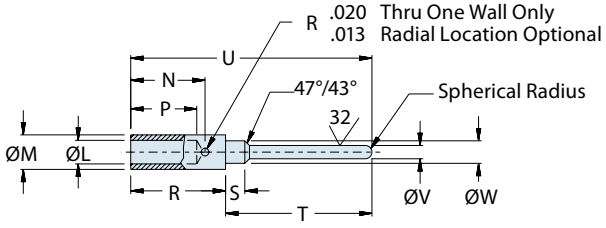

Inner Pin Contact

Material and Finish

Contact Body: Copper Alloy/Gold Plated
Hood: Stainless Steel/Passivated
Center Contact: Copper Alloy/Gold Plated
Crimp Sleeve: Copper Alloy/Gold Plated
Insulator: Teflon

* Indicates point at which a square ended pin of the same basic diameter as the mating contact first engages the outer contact spring

© 2012 Glenair, Inc.

M39029/78
852-010
Size 16 Coaxial Socket

Type	Cable Accommodation	Part Number	Military Part Number	Color Band 1st	2nd	3rd
Socket	M17/119-RG174, M17/113-RG316, M17/094-RG179, Times AA3248, Teledyne 11299, Haveg 8100207, Thermax 75-738-BCCWXE, Tensolite 3088/L707YX-1	852-010-16-432	M39029/78-432	Yellow	Orange	Red
	M17/093-RG178	852-010-16-433	M39029/78-433	Yellow	Orange	Orange
	Haveg 61-02051, Revere WH95623	852-010-16-434	M39029/78-434	Yellow	Orange	Yellow
	Haveg 30-00761, Haveg 30-02024, Haveg 30-02033, Tensolite 24713/A955KK1, Tensolite 26723/A955K1	852-010-16-435	M39029/78-435	Yellow	Orange	Green

Table I

BIN Code	ØA Max	ØB	ØC	ØD Min	ØE	ØF	ØG Max	ØH Min	ØJ Max	K	ØL Min
432	.113 (2.9)	.068 (1.73) .065 (1.65)	.089 (2.3) .084 (2.1)	.670 (17.0)	.103 (2.62) .101 (2.57)	.130 (3.3) .127 (3.2)	.108 (2.7)	.105 (2.7)	.120 (3.0)	.105 (2.7) .095 (2.4)	.0210 (0.5)
433	.113 (2.9)	.068 (1.73) .065 (1.65)	.089 (2.3) .084 (2.1)	0.575 (14.6)	.103 (2.62) .101 (2.57)	.130 (3.3) .127 (3.2)	.108 (2.7)	.094 (2.4)	.120 (3.0)	.105 (2.7) .095 (2.4)	.0210 (0.5)
434	.113 (2.9)	.068 (1.73) .065 (1.65)	.089 (2.3) .084 (2.1)	.670 (17.0)	.103 (2.62) .101 (2.57)	.130 (3.3) .127 (3.2)	.108 (2.7)	.105 (2.7)	.120 (3.0)	.105 (2.7) .095 (2.4)	.0355 (0.9)
435	.113 (2.9)	.068 (1.73) .065 (1.65)	.089 (2.3) .084 (2.1)	0.575 (14.6)	.103 (2.62) .101 (2.57)	.130 (3.3) .127 (3.2)	.108 (2.7)	.094 (2.4)	.120 (3.0)	.105 (2.7) .095 (2.4)	.0270 (0.7)

Table I (continued)

BIN Code	ØM Max	N Min	P	R	S	T	U Ref	ØV	ØW	X	ØZ Max
432	.046 (1.2)	.103 (2.6)	.094 (2.4) .087 (2.2)	.125 (3.2) .119 (3.0)	.079 (2.0) .073 (1.9)	.269 (6.83) .266 (6.76)	.3895 (9.9)	.0155 (.39) .0145 (.37)	.030 (0.8) .028 (0.7)	.274 (7.0) .264 (6.7)	.085 (2.2)
433	.046 (1.2)	.103 (2.6)	.094 (2.4) .087 (2.2)	.125 (3.2) .119 (3.0)	.079 (2.0) .073 (1.9)	.269 (6.83) .266 (6.76)	.3895 (9.9)	.0155 (.39) .0145 (.37)	.030 (0.8) .028 (0.7)	.274 (7.0) .264 (6.7)	.076 (1.9)
434	0.052 (1.3)	.103 (2.6)	.094 (2.4) .087 (2.2)	.125 (3.2) .119 (3.0)	.079 (2.0) .073 (1.9)	.269 (6.83) .266 (6.76)	.3895 (9.9)	.0155 (.39) .0145 (.37)	.030 (0.8) .028 (0.7)	.274 (7.0) .264 (6.7)	.085 (2.2)
435	.046 (1.2)	.103 (2.6)	.094 (2.4) .087 (2.2)	.125 (3.2) .119 (3.0)	.079 (2.0) .073 (1.9)	.269 (6.83) .266 (6.76)	.3895 (9.9)	.0155 (.39) .0145 (.37)	.030 (0.8) .028 (0.7)	.274 (7.0) .264 (6.7)	.076 (1.9)

Table III

Inner Contact		Outer Contact		Insertion Tool	Extraction Tool
Basic Crimping Tool	Positioner	Basic Crimping Tool	Positioner		
M22520/2-01	M22520/2-35	M22520/4-01	M22520/4-02	M81969/8-07 or M81969/14-03	M81969/8-08 or M81969/14-03

© 2012 Glenair, Inc.

M39029/90
853-001
Size 8 Concentric Twinax Pin

D38999
Ser. I, II, III, IV

Size #8 Concentric Twinax Pin for MIL-DTL-38999 Series I, II, III and IV Connectors (Inactive for New Design—Replaced by M39029/113)



These #8 concentric twinax pin contacts accept MIL-STD-1553 data bus twinax cable. Center and intermediate contacts are rated at 1 amp, the outer contact 12 amps. DWV rating is 500 Vac rms sea level, 125 Vac at 70,000 feet. Operating frequency is 0-20 MHz. Contacts are packaged individually and shipped unassembled with instruction sheet. One contact consists of outer contact , fluorocarbon dielectric, inner contact , intermediate contact and shield crimp bushing. All contacts are gold-plated copper alloy. Approved to SAE AS39029. 5000 megohm insulation resistance. Mates with: M39029/91.

Type	Cable Accommodation	Part Number	Military Part Number	Color Band		
				1st	2nd	3rd
Pin	M17/176-00002	853-001-08-529	M39029/90-529	Green	Red	White

© 2011 Glenair, Inc.

D38999
Ser. I, III, IV

Size #8 Concentric Twinax Socket for MIL-DTL-38999 Series I, III and IV Connectors (Inactive for New Design—Replaced by M39029/114)



These #8 concentric twinax socket contacts accept MIL-STD-1553 data bus twinax cable. Center and intermediate contacts are rated at 1 amp, the outer contact 12 amps. DWV rating is 500 Vac rms sea level, 125 Vac at 70,000 feet. Operating frequency is 0-20MHz. Contacts are packaged individually and shipped unassembled with instruction sheet. One contact consists of outer contact , fluorocarbon dielectric, inner contact , intermediate contact and shield crimp bushing. All contacts are gold-plated copper alloy. Approved to SAE AS39029. 5000 megohm insulation resistance. Mates with: M39029/90.

B

Type	Cable Accommodation	Part Number	Military Part Number	Color Band		
				1st	2nd	3rd
Socket	M17/176-00002	**853-002-08-530**	M39029/91-530	Green	Orange	Black

© 2011 Glenair, Inc.

M39029/113
853-003
Size 8 Concentric Twinax Pin

D38999 Ser. I, III, IV

Size #8 Concentric Twinax Pin for MIL-DTL-38999 Series I, III and IV Connectors



These #8 concentric twinax pin contacts accept MIL-STD-1553 data bus twinax cable. Center and intermediate contacts are rated at 1 amp, the outer contact 12 amps. DWV rating is 500 Vac rms sea level, 125 Vac at 70,000 feet. Operating frequency is 0-20 MHz. Contacts are packaged individually and shipped unassembled with instruction sheet. One contact consists of outer contact , fluorocarbon dielectric, inner contact , intermediate contact and shield crimp bushing. All contacts are gold-plated copper alloy. Approved to SAE AS39029. 5000 megohm insulation resistance. Mates with: M39029/114.

Type	Cable Accommodation	Part Number	Military Part Number	Color Band 1st	2nd	3rd
Pin	M17/176-00002	853-003-08-625	M39029/113-625	Blue	Red	Green

Table II - Tool (Insertion and Extraction)

M81969/14-12

Table III Tools (Crimping)

Center Contact Tooling		Intermediate Contact Tooling		Outer Crimp Sleeve Tooling	
Basic Crimping Tool	Contact Positioner	Basic Crimping Tool	Die Part No.	Basic Crimping	Die Part No.
M22520/2-01	M22520/2-37	M22520/5-01	M22520/5-105 Cavity B	M22520/5-01	M22520/5-105 Cavity A

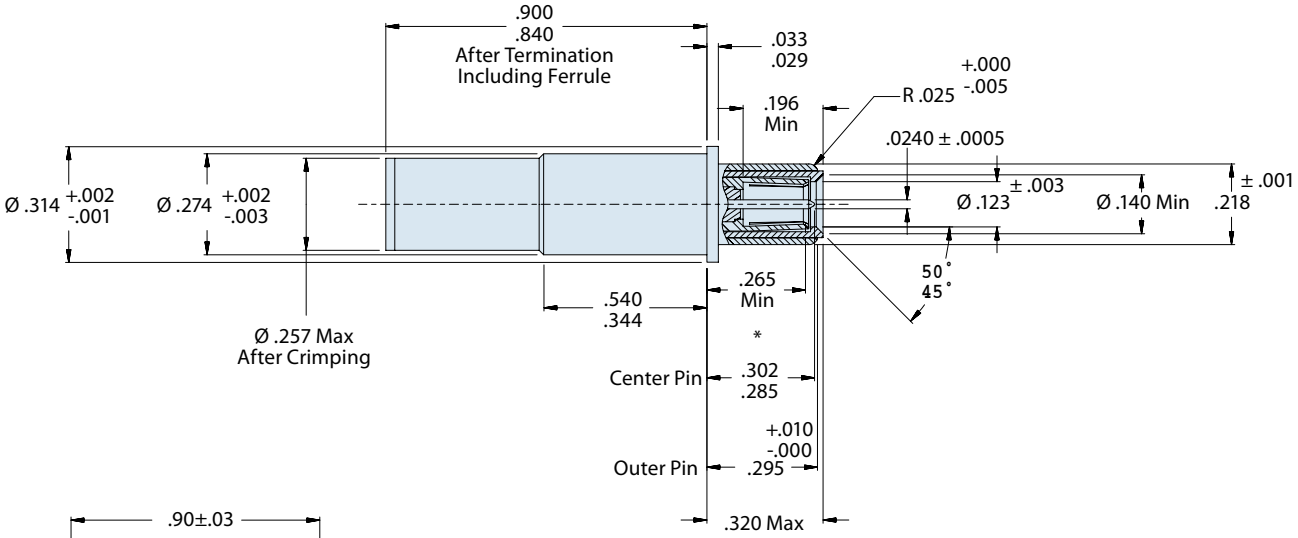

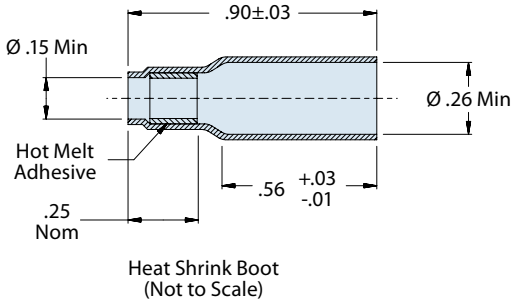

Heat Shrink Boot
(Not to Scale)

Material and Finish

Contact Body: Copper Alloy/Gold Plated
Inner and Intermediate Contacts: Copper Alloy/Gold Plated
Crimp Sleeve: Copper Alloy/Gold Plated
Insulator: Teflon

© 2011 Glenair, Inc.

D38999
Ser. I, III, IV

Size #8 Concentric Twinax Socket for MIL-DTL-38999 Series I, III and IV Connectors



These #8 concentric twinax socket contacts accept MIL-STD-1553 data bus twinax cable. Center and intermediate contacts are rated at 1 amp, the outer contact 12 amps. DWV rating is 500 Vac rms sea level, 125 Vac at 70,000 feet. Operating frequency is 0-20 MHz. Contacts are packaged individually and shipped unassembled with instruction sheet. One contact consists of outer contact , fluorocarbon dielectric, inner contact , intermediate contact and shield crimp bushing. All contacts are gold-plated copper alloy. Approved to SAE AS39029. 5000 megohm insulation resistance. Mates with: M39029/113.

Type	Cable Accommodation	Part Number	Military Part Number	Color Band 1st	2nd	3rd
Socket	M17/176-00002	853-004-08-628	M39029/114-628	Blue	Red	Violet

Table II - Tool (Insertion and Extraction)
M81969/14-12

Table III Tools (Crimping)					
Center Contact Tooling		Intermediate Contact Tooling		Outer Crimp Sleeve Tooling	
Basic Crimping Tool	Contact Positioner	Basic Crimping Tool	Die Part No.	Basic Crimping	Die Part No.
M22520/2-01	M22520/2-37	M22520/5-01	M22520/5-105	M22520/5-01	M22520/5-105

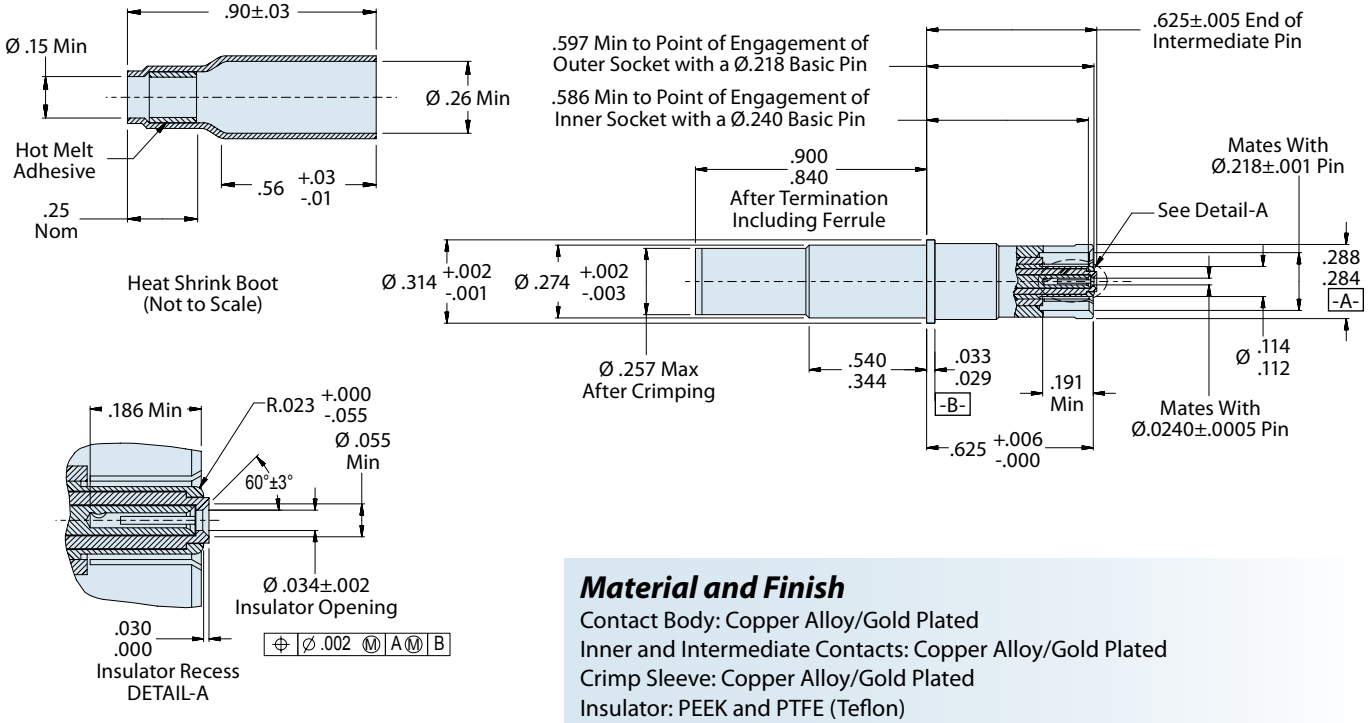

Material and Finish

Contact Body: Copper Alloy/Gold Plated
Inner and Intermediate Contacts: Copper Alloy/Gold Plated
Crimp Sleeve: Copper Alloy/Gold Plated
Insulator: PEEK and PTFE (Teflon)

© 2011 Glenair, Inc.

854-001
Crimp Quadrax Pin Contact
MIL-DTL-38999 Series III Type

D38999 Series III

Size #8 Quadrax Pin Contact for Glenair 257-606 Connectors (D38999 Ser. III Type)



These #8 quadrax pin contacts accept 100 ohm quadrax cable. Center contacts are rated at 1 amp, the outer contact 12 amps. DWV rating is 500 Vac rms sea level, 125 Vac at 70,000 feet. Contacts are packaged individually and shipped unassembled with instruction sheet. One contact consists of outer contact , fluorocarbon dielectric, inner contacts and shield crimp bushing. All contacts are gold-plated copper alloy. 5000 megohm insulation resistance at 200Vdc. Mates with: 854-002. Ideally suited for up to 1000 Base-T gigabit ethernet.

Type	Glenair Part Number	Military Part Number	Cable Accommodation	Grommet Follower	Cable O.D.	"A" Hex	Wire Size
Pin	854-001-01	N/A	Tensolite NF26Q100	687-754-8-1	.137	.218	26 AWG
	854-001-02	N/A	Tensolite NF24Q100	687-754-8-2	.163	.218	24 AWG
	854-001-03	N/A	Draka Fileca F-4704-6	687-754-8-3	.153	.218	26 AWG
	854-001-04	N/A	Draka Fileca F-4704-4	687-754-8-4	.175	.218	24 AWG
	854-001-05	N/A	Tensolite NF22Q100	687-754-8-5	.190	.231	22 AWG

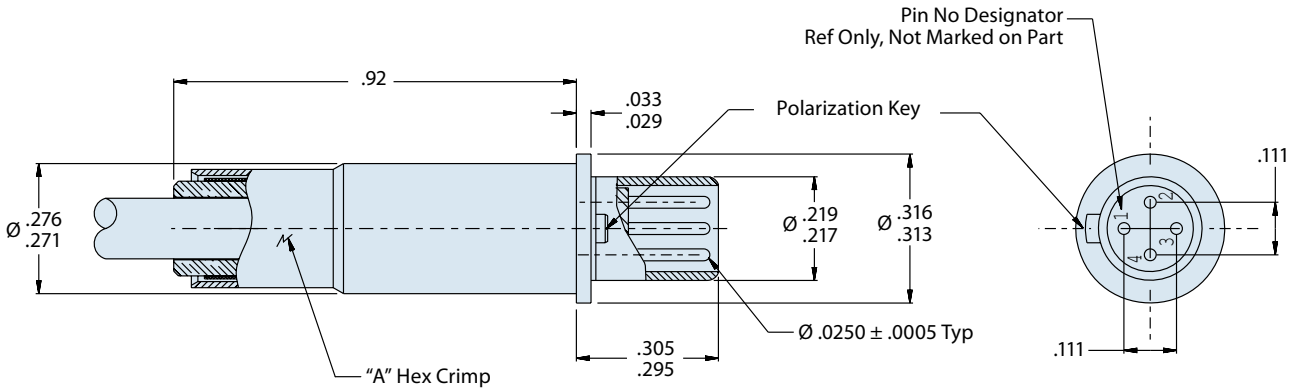

Material and Finish

Contact Body: Copper Alloy/Gold Plated
Inner Contact: Copper Alloy/Gold Plated
Crimp Bushing: Brass or equivalent/Gold Plated
Insulator: Teflon, Ultem Series 1000 or equivalent
Grommet/Follower: Fluorosilicone/Ultem 1000 or equivalent

© 2011 Glenair, Inc.

854-002
Crimp Quadrax Socket Contact
MIL-DTL-38999 Series III Type

D38999 Series III

Size #8 Quadrax Socket Contact for Glenair 257-606 Connectors (D38999 Ser. III Type)



These #8 quadrax socket contacts accept 100 ohm quadrax cable. Center contacts are rated at 1 amp, the outer contact 12 amps. DWV rating is 500 Vac rms sea level, 125 Vac at 70,000 feet. Contacts are packaged individually and shipped unassembled with instruction sheet. One contact consists of outer contact, fluorocarbon dielectric, inner contacts and shield crimp bushing. All contacts are gold-plated copper alloy. 5000 megohm insulation resistance at 200Vdc. Mates with: 854-001. Ideally suited for up to 1000 Base-T gigabit ethernet.

Type	Glenair Part Number	Military Part Number	Cable Accommodation	Grommet Follower	Ref Cable O.D.	"A" Hex	Wire Size
Socket	854-002-01	N/A	Tensolite NF26Q100	687-754-8-1	.137	.218	26 AWG
	854-002-02	N/A	Tensolite NF24Q100	687-754-8-2	.163	.218	24 AWG
	854-002-03	N/A	Draka Fileca F-4704-6	687-754-8-3	.153	.218	26 AWG
	854-002-04	N/A	Draka Fileca F-4704-4	687-754-7-4	.175	.218	24 AWG
	854-002-05	N/A	Tensolite NF22Q100	687-754-8-5	.190	.231	22 AWG

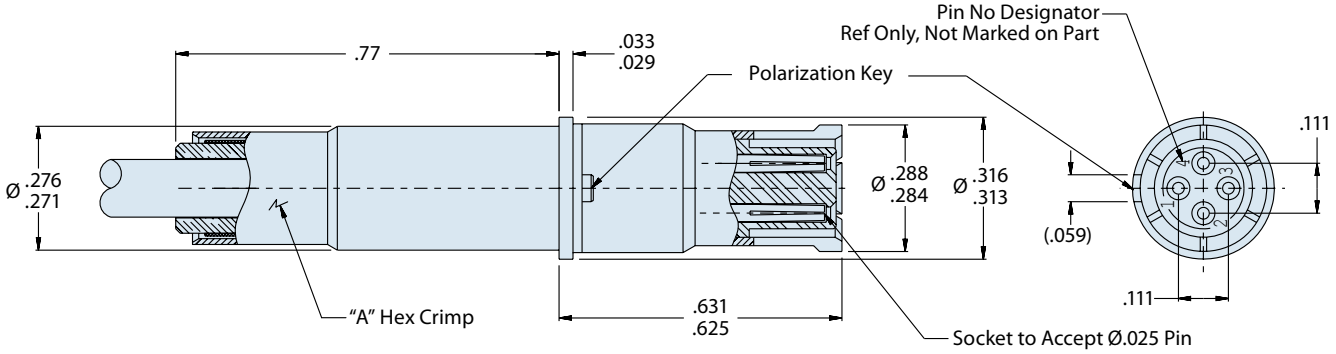

Material and Finish

Contact Body: Copper Alloy/Gold Plated
Inner Contact: Copper Alloy/Gold Plated
Crimp Bushing: Brass or equivalent/Gold Plated
Insulator: Teflon, Ultem Series 1000 or equivalent
Grommet/Follower: Fluorosilicone/Ultem 1000 or equivalent

© 2011 Glenair, Inc.

853-015
Size #12 Differential Twinax Socket Contact
For Use with Mighty Mouse and Series 79 Micro-Crimp

Size #12 Differential Twinax Socket Contact for Multi-Gigabit Data Rate Applications



These solder terminated #12 twinax socket contacts accept 100 ohm twinax cable. Current rating is 1 Amp. DWV rating is 500 Vac rms sea level, 125 Vac at 70,000 feet. Contacts are packaged individually and shipped unassembled with instruction sheet. One contact consists of outer contact and center contact. All contacts are gold-plated copper alloy. 5000 megohm insulation resistance at 200Vdc. Mates with: 853-016. Ideally suited for multi-gigabit data rate applications such as 1000 Base-T gigabit ethernet.

Type	Glenair Part No.	Military Part No.	AWG Wire Size	Cable Accommodation	Impedence	Frequency Range	VSWR	Insertion Loss
Socket	853-015-01	N/A	30	963-102-30	100-Ohms Nominal	DC to 10 GHz	1.1 + (.03 * F GHz)	1/3 *F GHz

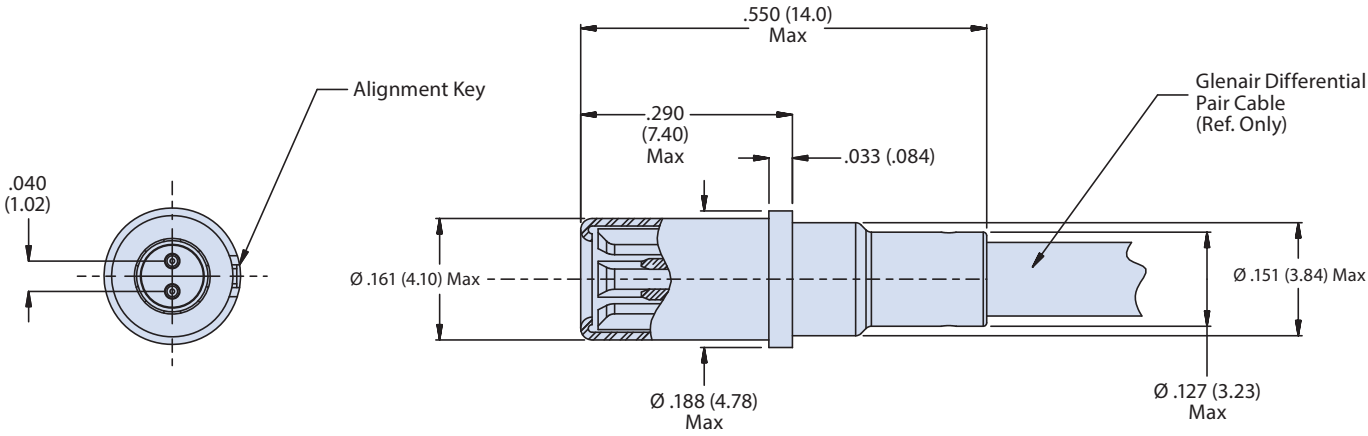



Material and Finish
Contact Body: Copper Alloy/Gold Plated
Center Contact: Copper Alloy/Gold Plated

Electrical Parameters
Differential Impedence: 100-ohms nominal
Frequency Range: DC to 10 Ghz
VSWR: 1.1+(.03* F GHz)
Insertion Loss: 1/3* F GHz
Dielectric Withstanding Voltage: 500 Vrms
Insulation Resistence: 5000 Megohms minimum

Notes
Contact is designed to accommodate Glenair P/N 963-102-30 cable.
For assembly instructions, see AI85014.
Socket contact shall mate with Glenair Pin Contact P/N 853-016-XX.
For use in Glenair Mighty Mouse and Series 79 Micro-Crimp connectors only.
PCB Tail-equipped contacts also available. Consult factory.

© 2012 Glenair, Inc.

Size #12 Differential Twinax Pin Contact for Multi-Gigabit Data Rate Applications



These solder terminated #12 twinax pin contacts accept 100 ohm twinax cable. Current rating is 1 Amp. DWV rating is 500 Vac rms sea level, 125 Vac at 70,000 feet. Contacts are packaged individually and shipped unassembled with instruction sheet. One contact consists of outer contact and center contact. All contacts are gold-plated copper alloy. 5000 megohm insulation resistance at 200Vdc. Mates with: 853-015. Ideally suited for multi-gigabit data rate applications such as 1000 Base-T gigabit ethernet.

Type	Glenair Part No.	Military Part No.	AWG Wire Size	Cable Accommodation	Impedence	Frequency Range	VSWR	Insertion Loss
Pin	853-016-01	N/A	30	963-102-30	100-Ohms Nominal	DC to 10 GHz	1.1 + (.03 * F GHz)	1/3 *F GHz

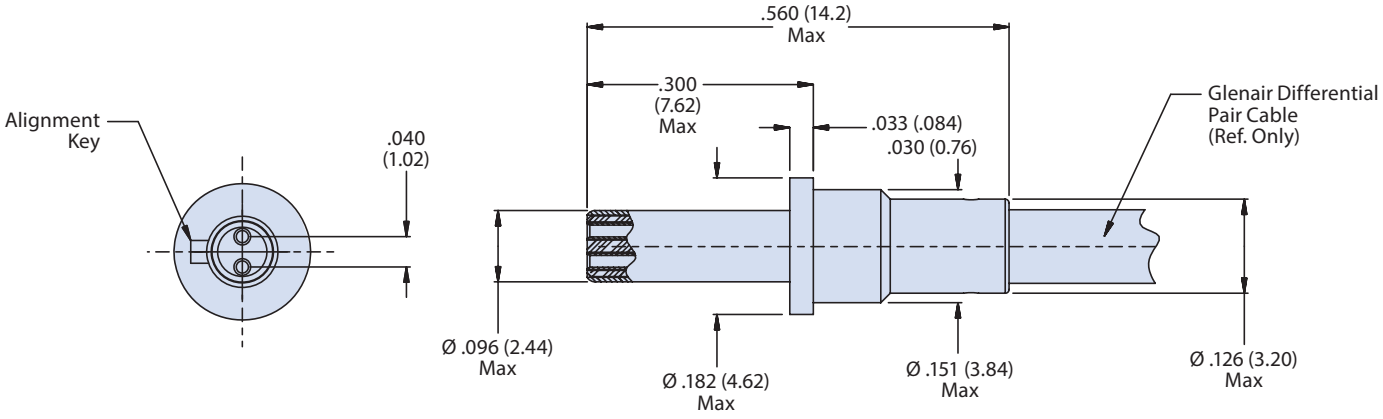



Material and Finish
Contact Body: Copper Alloy/Gold Plated
Center Contact: Copper Alloy/Gold Plated

Electrical Parameters
Differential Impedence: 100-ohms nominal
Frequency Range: DC to 10 Ghz
VSWR: 1.1+(.03* F Ghz)
Insertion Loss: 1/3* F Ghz
Dielectric Withstanding Voltage: 500 Vrms
Insulation Resistence: 5000 Megohms minimum

Notes
Contact is designed to accommodate Glenair P/N 963-102-30 cable.
For assembly instructions, see AI85014.
Pin contact shall mate with Glenair Socket Contact P/N 853-015-XX.
For use in Glenair Mighty Mouse and Series 79 Micro-Crimp connectors only.
PCB Tail-equipped contacts also available. Consult factory.

© 2012 Glenair, Inc.

AI85014
Twinax Socket Contact
Assembly Instructions

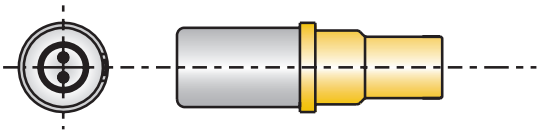

Socket Contact



100 Ohm Parallel Cable

STEP 1

1. Strip cable to dimensions shown. ***Be careful not to flare braid open***.
2. Pre-tin conductor and braid shield.
3. Clean the solder joint with alcohol.

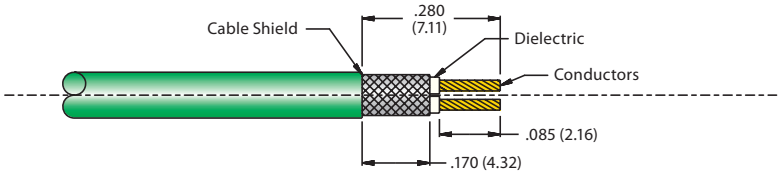

STEP 2

1. Insert cable into socket contact. ***Make sure center conductor lines up to the center socket.***



STEP 3

1. Install center conductors until they bottom-out in the contact cavity. ***Inspect to ensure cable shield is visible through the inspection hole***.
2. Apply flux and solder through the inspection hole; remove residues and contamination with alcohol after soldering.

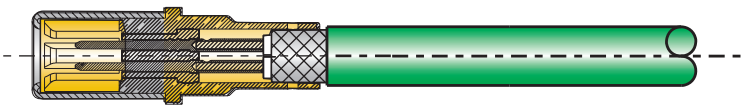

STEP 4

1. Install M23053/5-204 or M23053/6-204 shrink tubing; cover solder area and extend insulation by minimum of one wire diameter.

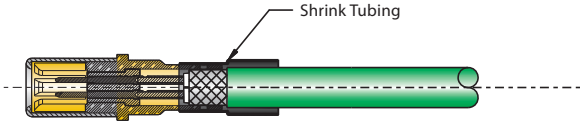

STEP 5

1. Illustrates final assembly.

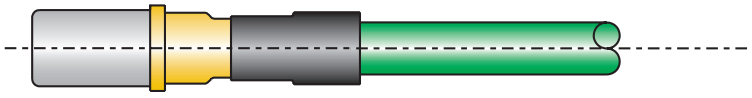

© 2012 Glenair, Inc.

AI85015
Twinax Pin Contact
Assembly Instructions



Pin Contact

100 Ohm Parallel Cable

STEP 1

1. Strip cable to dimensions shown. ***Be careful not to flare braid open***.
2. Pre-tin conductor and braid shield.
3. Clean the solder joint with alcohol.

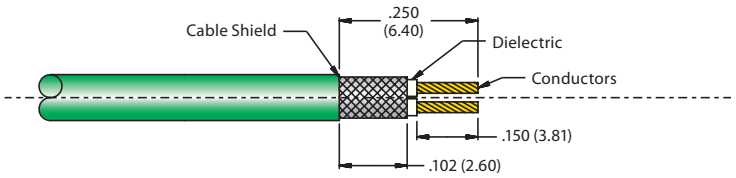

STEP 2

1. Insert cable into pin contact. ***Make sure center conductor lines up to the center pin.***



STEP 3

1. Install center conductors until they bottom-out in the contact cavity. ***Inspect to ensure cable shield is visible through the inspection hole***.
2. Apply flux and solder through the inspection hole; remove residues and contamination with alcohol after soldering.

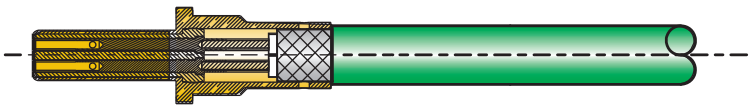

STEP 4

1. Install M23053/5-204 or M23053/6-204 shrink tubing; cover solder area and extend insulation by minimum of one wire diameter.

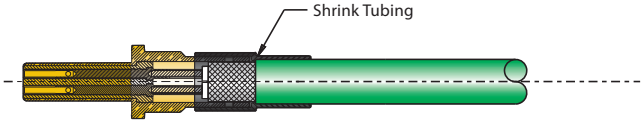

STEP 5

1. Illustrates final assembly.

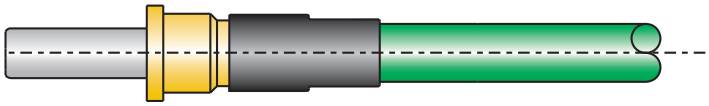

© 2012 Glenair, Inc.

SERIES 18

FIBER OPTICS

Mission-Critical Interconnect Systems for Commercial and Military Applications



From our MIL-PRF-28876 type fiber optic connectors to our MIL-DTL-38999 type solutions, Glenair produces advanced performance fiber optic interconnection systems for every military and commercial standard. Fiber optic connectors, termini and cabling offer reduced weight, reduced size, huge bandwidth and EMI immunity— and Glenair manufactures a solution for every branch of the military and every mission-critical commercial application. For complete order information please see our fiber optic catalog or visit our website at www.glenair.com

Glenair®

1211 Air Way • Glendale, CA 91201-2497 • Tel: 818-247-6000 • Fax: 818-500-9912 • E-Mail: sales@glenair.com

QPL and Commercial
High Performance Fiber Optic Termini

Industry Leading Fiber Optic Technology

Glenair Fiber Optic connection systems are well known throughout the aerospace and tactical military applications arena. Our fiber optic contacts are universally recognized to provide consistent performance with extremely low dB loss. We are the supplier of choice for some of the world's most advanced fiber optic systems, including the revolutionary F-35 Joint Strike Fighter.

Glenair offers the industry's widest range of contacts for both Mil-Spec and proprietary fiber optic connection systems. These highly-available contact termini are guaranteed to deliver outstanding interconnection compatibility. Glenair manufactures fiber optic termini for every popular Mil-Spec and commercial high-performance interconnection system, including the multi-channel MIL-DTL-38999 Series III. Our fiber optic termini deliver optimal performance in both our own connectors as well as those produced by other manufacturers. In fact, our MIL-PRF-29504 qualified fiber optic termini are often selected as much for their outstanding interconnection compatibility as for their ability to boost the optical performance of third party connectors.

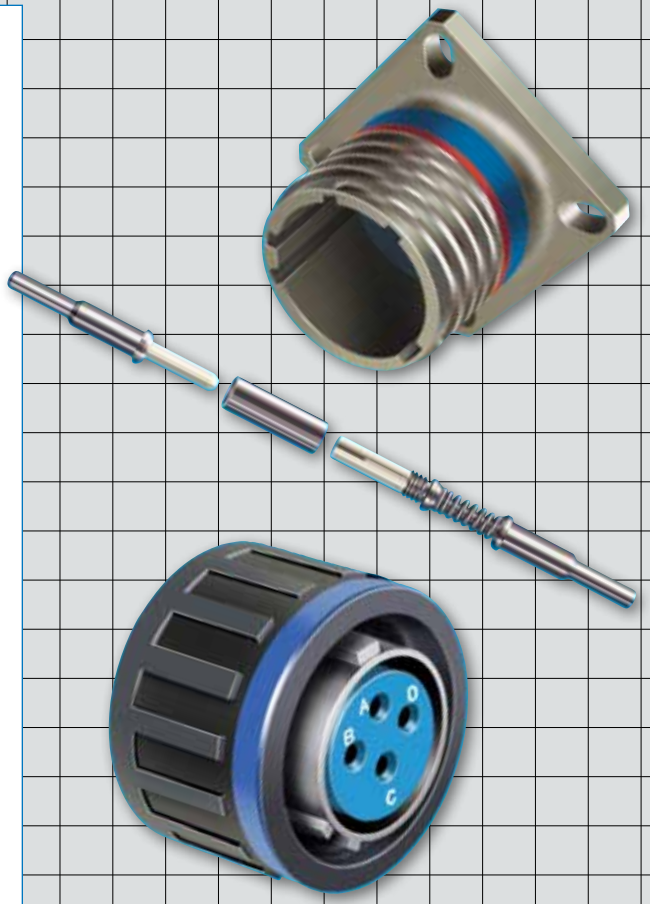

- Qualified and Commercial High-Performance, Low dB Loss Termini
- Same Day Inventory for Hundreds of Part Numbers
- Broadest Range of Mission-Critical Termini in the Mil-Aero Industry
- Myriad Material and Design Advantages

© 2011 Glenair, Inc.
CAGE Code 06324
Printed in U.S.A.

GLENAIR, INC. • 1211 AIR WAY • GLENDALE, CA 91201-2497 • 818-247-6000 • FAX 818-500-9912
www.glenair.com
E-Mail: sales@glenair.com

Fiber Optic Termini Selection Guide

Glenair Part Number	Part Description	Contact Size	Pin / Socket	Connector Series	Product Page
MIL-DTL-38999 Fiber Optic Contacts					
181-001	M29504/5 Socket Terminus	16	Socket	D38999 Series III	C-4
181-002	M29504/4 Pin Terminus	16	Pin	D38999 Series III	C-6
181-035	Socket, Large Core Fiber	16	Socket	D38999 Series III	C-8
181-036	Pin, Large Core Fiber	16	Pin	D38999 Series III	C-9
181-052	Jewel Pin Terminus	16	Pin	D38999 Series III	C-10
181-053	Jewel Socket Terminus	16	Socket	D38999 Series III	C-11
181-048	Sealing Plug	16	Pin	D38999 Series III	C-12
181-065	#20 Pin Terminus	20	Pin	D38999 Series III	C-13
181-066	#20 Socket Terminus	20	Socket	D38999 Series III	C-14
MIL-PRF-28876 Fiber Optic Contacts					
181-039	M29504/14 Pin Terminus	16	Pin	M28876	C-15
181-040	M29504/15 Socket Terminus	16	Socket	M28876	C-16
181-051	M29504/3 Dummy Terminus	16	Dummy	M28876	C-33
Series 80 Mighty Mouse Fiber Optic Contacts					
181-057	Mighty Mouse Pin Terminus	16	Pin	Series 80 Mighty Mouse	C-18
181-075	Mighty Mouse Socket Terminus	16	Socket	Series 80 Mighty Mouse	C-19

© 2011 Glenair, Inc.

Glenair Part Number	Part Description	Contact Size	Pin / Socket	Connector Series	Product Page
Special Fiber Optic COTS Contacts Size 16 Front Release					
181-011	Front Release Socket with Pressure Sealing O-Ring(s)	16	Socket	COTS	C-20
181-012	Front Release Pin	16	Pin	COTS	C-22
181-051	Dummy Terminus	16	Dummy	COTS	C-33
ARINC Type Fiber Optic Contacts					
181-076	ARINC 801 Terminus	16	Genderless Pin	ARINC 801	C-24
187-079	M29504/6 Pin Terminus	16	Pin	ARINC 404, 600	C-25
187-080	M29504/7 Socket Terminus	16	Socket	ARINC 404, 600	C-26
Glenair High Density (GHD) Fiber Optic Contacts					
181-056	GHD Terminus, Non-keyed	18	Genderless Pin	GHD	C-28
181-047	GHD Terminus, Keyed	18	Genderless Pin	GHD	C-30
181-058	Dummy Terminus	18	Dummy	GHD	C-32
Glenair GFOCA Fiber Optic Contacts					
181-050	GFOCA Terminus		Genderless Pin	GFOCA	C-34
181-059	Dummy Terminus		Dummy	GFOCA	C-36
Next Generation Fiber Optic (NGCON) Contacts					
181-043	M29504/18	16	Genderless Pin	M64266	C-37

© 2011 Glenair, Inc.

M29504/5
181-001
Size 16 MIL-DTL-38999 Type Fiber Optic Socket Terminus

D38999 Series III

Ultra low dB loss QPL'd Socket Terminus for MIL-DTL-38999



Glenair's unique alignment techniques maximize optical performance and provide reliable, repeatable interconnection of optical fibers. Ferrule design, critical to the performance of the termini, has traditionally relied on a machined stainless steel ferrule incorporating a precision micro drilled hole. Glenair's unique precision ceramic ferrules, with concentricity and diametric tolerances controlled within a micron (.00004 of an inch) meet the needs of high bandwidth and low allowable insertion loss applications. In fact, Glenair's ferrules are approximately 10 times more accurate than alternative designs, and have reduced insertion loss values from 1.5dB to less than .5dB (typical loss for Glenair termini is .3 dB).

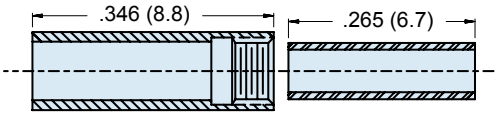

Protective Cover Alignment Sleeve (Included with Terminus)

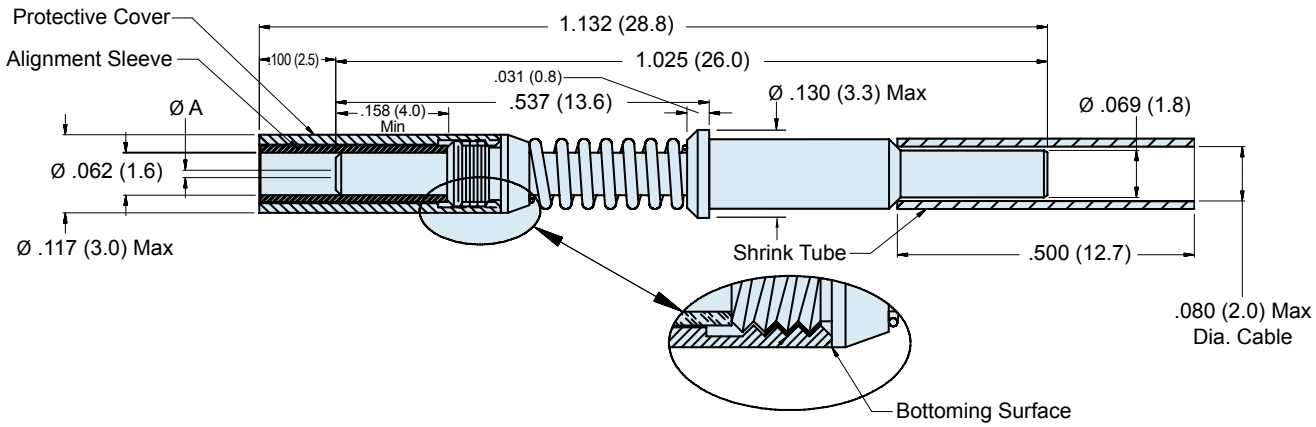

Material and Finish

Ferrule: Zirconia Ceramic
Alignment Sleeve: Zirconia Ceramic or Stainless Steel/Passivate.
Terminus Assembly: Stainless Steel/Passivate
Spacer, Spring, and Cover: Stainless Steel/Passivate
Shrink Tube: Kynar

Accessories

Alignment Sleeve & Protective Cover can also be ordered separately (Table II).

Assembly

See assembly procedure GAP-015 for complete termination instructions.
Recommended insertion/Extraction tool: P/N: M81969/14-03 or equivalent

© 2011 Glenair, Inc.

Part Number	Fiber Size Core/Cladding*	A Dia. (Microns)	Reference Only M29504/5-XXXX
181-001-125	9/125 (Single Mode)	125.5	M29504/5-4237
181-001-126S	9/125 (Single Mode)	126.0	M29504/5-4238
181-001-126	50/125 & 62.5/125	126.0	M29504/5-4239
181-001-127	50/125 & 62.5/125	127.0	M29504/5-4046
181-001-142	100/140	142.0	M29504/5-4049
181-001-144	100/140	144.0	N/A
181-001-145	100/140	145.0	M29504/5-4050
181-001-156	62.5/125/155 (Polyimide)	156.0	M29504/5-4240
181-001-157	62.5/125/155 (Polyimide)	157.0	M29504/5-4241
181-001-173	100/140/172 (Polyimide)	173.0	M29504/5-4088
181-001-175	100/140/172 (Polyimide)	175.0	M29504/5-4242
181-001-231	200/230	231.0	N/A
181-001-236	200/233	236.0	M29504/5-4243
181-001-286	200/280	286.0	M29504/5-4244
181-001-448	400/440	448.0	M29504/5-4245
181-001-533	486/500	533.0	N/A

Ceramic alignment sleeve supplied with terminus. Add K to the end of part number development to supply with optional stainless steel alignment sleeve *e.g. 181-001-126**K***.

Accessories	
Part Number	**Description**
181-001-S	Ceramic Alignment Sleeve
181-001-K	Stainless Steel Alignment Sleeve
181-001-C	Protective cover

© 2011 Glenair, Inc.

M29504/4
181-002
Size 16 MIL-DTL-38999 Type Fiber Optic Pin Terminus

D38999 Series III

Ultra Low dB loss QPL'd Pin Terminus for MIL-DTL-38999



Glenair's unique alignment techniques maximize optical performance and provide reliable, repeatable interconnection of optical fibers. Ferrule design, critical to the performance of the termini, has traditionally relied on a machined stainless steel ferrule incorporating a precision micro drilled hole. Glenair's unique precision ceramic ferrules, with concentricity and diametric tolerances controlled within a micron (.00004 of an inch) meet the needs of high bandwidth and low allowable insertion loss applications. In fact, Glenair's ferrules are approximately 10 times more accurate than alternative designs, and have reduced insertion loss values from 1.5dB to less than .5dB (typical loss for Glenair termini is .3 dB).

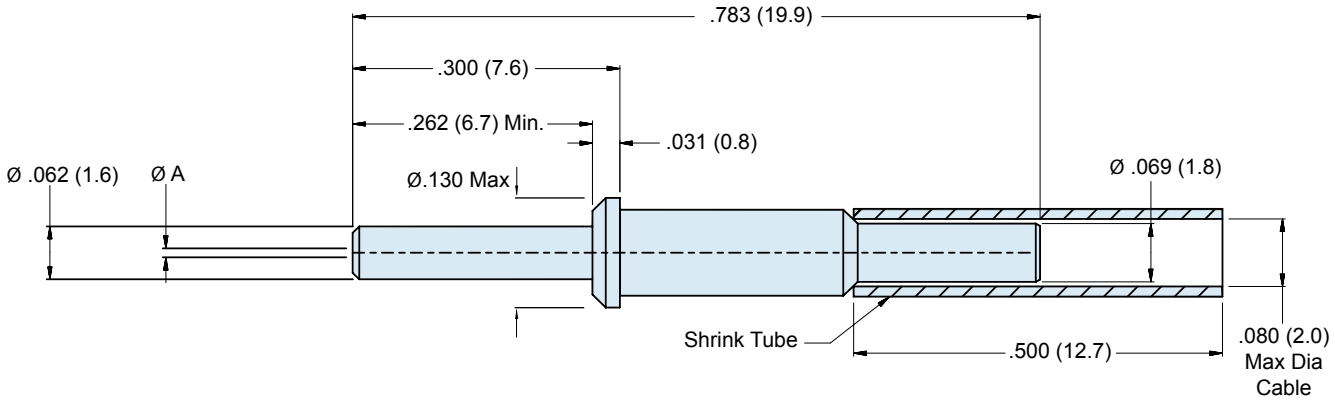

Material and Finish

Ferrule: Zirconia Ceramic
Terminus Assembly: Stainless Steel/Passivate
Shrink Tube: Kynar

Assembly

Recommended insertion/Extraction tool: P/N: M81969/14-03 or equivalent
See Glenair assembly procedure GAP-015 for complete termination instructions.

© 2011 Glenair, Inc.

Part Number	Fiber Size Core/Cladding*	A Dia. (Microns)	Reference Only M29504/4-XXXX
181-002-125	9/125 (Single Mode)	125.5	M29504/4-4208
181-002-126S	9/125 (Single Mode)	126.0	M29504/4-4209
181-002-126	50/125 & 62.5/125	126.0	M29504/4-4210
181-002-127	50/125 & 62.5/125	127.0	M29504/4-4040
181-002-142	100/140	142.0	M29504/4-4043
181-002-144	100/140	144.0	N/A
181-002-145	100/140	145.0	M29504/4-4044
181-002-156	62.5/125/155 (Polyimide)	156.0	M29504/4-4211
181-002-157	62.5/125/155 (Polyimide)	157.0	M29504/4-4212
181-002-173	100/140/172 (Polyimide)	173.0	M29504/4-4087
181-002-175	100/140/172 (Polyimide)	175.0	M29504/4-4213
181-002-231	200/230	231.0	N/A
181-002-236	200/233	236.0	M29504/4-4214
181-002-286	200/280	286.0	M29504/4-4215
181-002-448	400/440	448.0	M29504/4-4216
181-002-533	486/500	533.0	N/A

© 2011 Glenair, Inc.

181-035
Large Core Optical Fiber Socket Terminus
MIL-DTL-38999 Type

D38999 Series III

Large Core Fiber Optic MIL-DTL-38999 Type Size 16 Socket Terminus



Part Number	Fiber Size Core/Cladding (Microns)	ØA (Microns)
181-035-600	600 Micron	610.0
181-035-1000	1000 Micron (Plastic)	1117.0

Ceramic alignment sleeve supplied with terminus. Add **K** to the end of part number development to supply with optional stainless steel alignment sleeve *e.g. 181-035-1000**K***.

Accessories	
Part Number	Terminus Accessory
181-001-S	Ceramic Alignment Sleeve
181-001-K	Stainless Steel Alignment Sleeve
181-001-C	Protective Cover

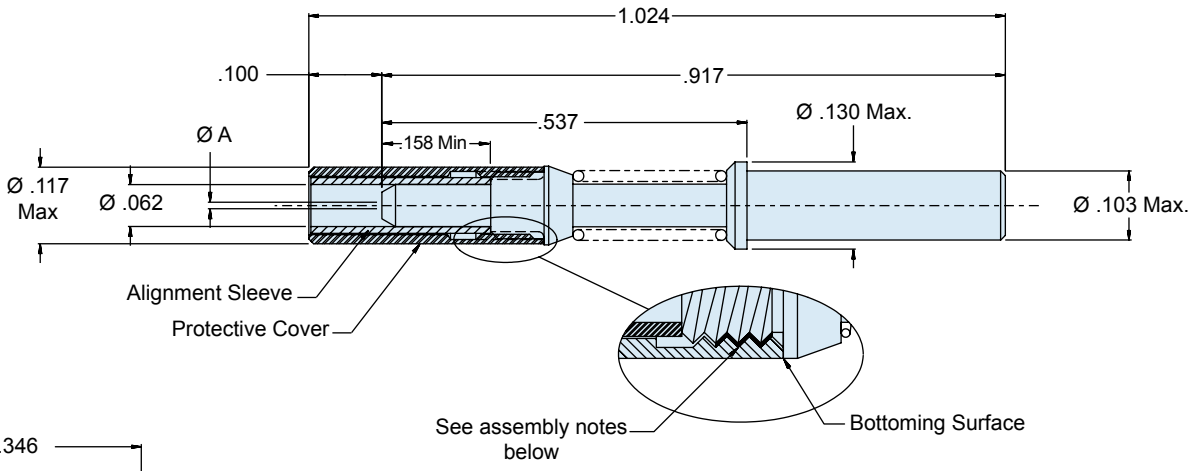

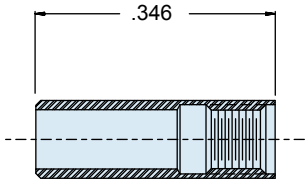

Protective Cover

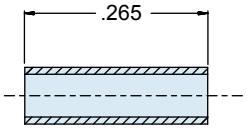

Alignment Sleeve

Material and Finish

Ferrule: Stainless Steel/Passivate
Alignment Sleeve: Zirconia Ceramic or Stainless Steel/Passivate
Terminus Assembly: Stainless Steel/Passivate
Spacer, Spring, and Cover: Stainless Steel/Passivate

Tools and Accessories/Assembly Notes

Alignment sleeve and protective cover can also be ordered separately (see Table II)
Threaded Protective cover must be retained using Threadlocker "Loctite 222" prior to insertion and fully seated against terminus body as shown. See Glenair assembly procedure GAP-015 for complete termination instruction.
Recommended Insertion/Extraction Tool: P/N M81969/14-03 or equivalent

© 2011 Glenair, Inc.

D38999 Series III

Large Core Fiber Optic MIL-DTL-38999 Type Size 16 Pin Terminus



Part Number	Fiber Size Core/ Cladding	ØA (Microns)
181-036-600	600 Micron	610.0
181-036-1000	1000 Micron (Plastic)	1117.0

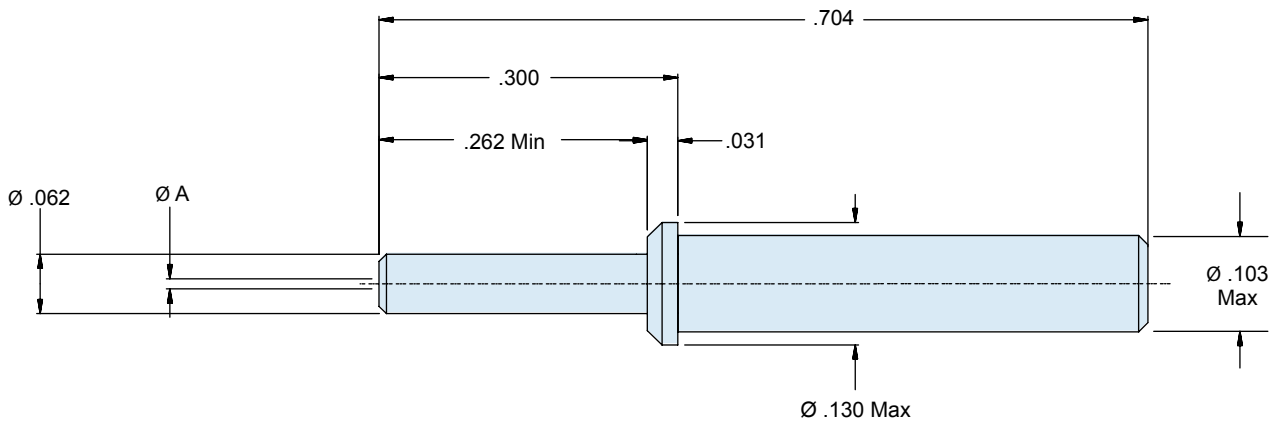

Material and Finish
Ferrule and Terminus Body: Stainless Steel/Passivate

Tools and Assembly Notes
Recommended Insertion/Extraction Tool: P/N M81969/14-03 or equivalent
See Glenair Assembly Procedure GAP-015 for complete termination instruction.

© 2011 Glenair, Inc.

181-052
Size 16 Fiber Optic Jewel Pin Terminus
MIL-DTL-38999 Type

D38999 Series III

MIL-DTL-38999 Type Fiber Optic Jewel Pin Terminus



Part Number	Ferrule Hole Ø A (Microns)	Typical Fiber Size Core/Cladding/Coating (Microns)
181-052-125	125.0	9/125 (Single Mode)
181-052-127	127.0	50/125, 62.5/125
181-052-142	142.0	100/140
181-052-157	157.0	62.5/125/155
181-052-175	175.0	100/140/172
181-052-236	236.0	200/230

Add **L** to the end of part number development to supply less epoxy preforms *e.g. 181-052-127**L***. Omit to include preforms.

Terminus Accessories	
Part Number	Terminus Accessory
189-070-6	Reducing Sleeve Ø1.90mm Max Cable Jacket

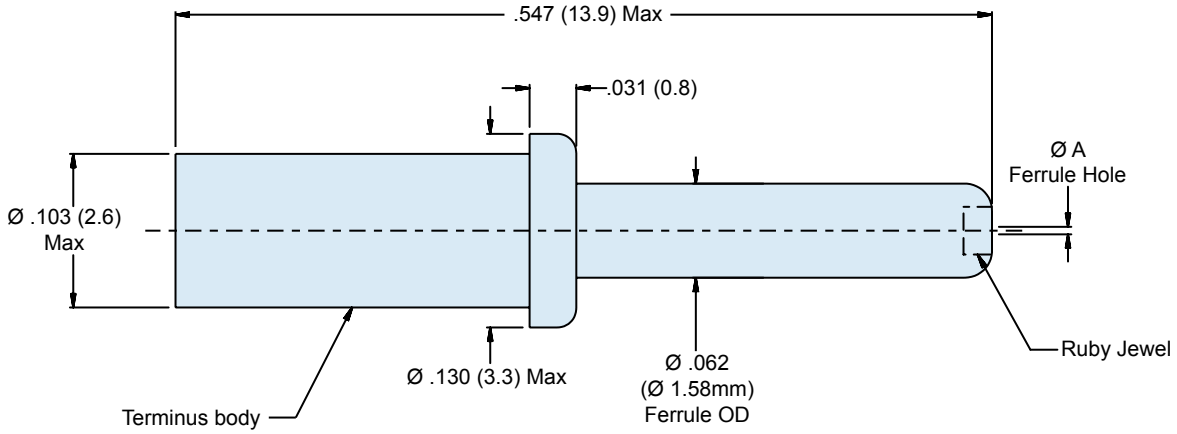

Material and Finish
Terminus Body: Stainless steel/passivate
Jewel, Ruby: Synthetic ruby or sapphire

Assembly
Recommended insertion/extraction tool: M81969/14-03 or equivalent

© 2011 Glenair, Inc.

181-053
Size 16 Fiber Optic Jewel Socket Terminus
MIL-DTL-38999 Type

D38999 Series III

Fiber Optic Jewel Socket Terminus for MIL-DTL-38999 Type Connectors



Part Number	Ferrule Hole Ø A (Microns)	Typical Fiber Size Core/Cladding/ Coating (Microns)
181-053-125	125.0	9/125 (Single Mode)
181-053-127	127.0	50/125, 62.5/125
181-053-142	142.0	100/140
181-053-157	157.0	62.5/125/155
181-053-175	175.0	100/140/172
181-053-236	236.0	200/230

Add **L** to the end of part number development to supply less epoxy preforms *e.g. 181-053-127**L***. Omit to include preforms.

Terminus Accessories	
Part Number	Terminus Accessory
189-070-6	Reducing Sleeve Ø1.90mm Max Cable Jacket
189-075	Alignment Sleeve
182-031	Alignment Sleeve Installation Tool
182-032	Alignment Sleeve Extraction Tool

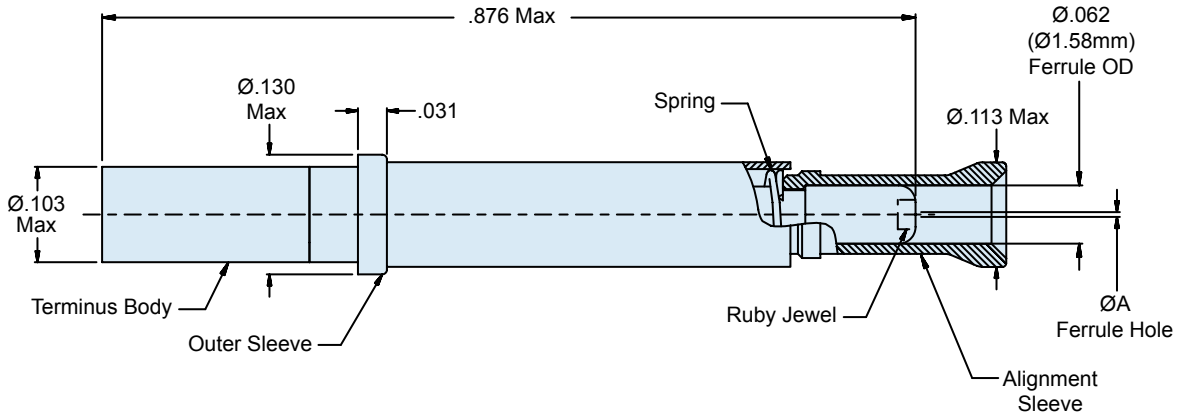

Material and Finish

Terminus Body: Stainless Steel/Passivate
Jewel/Ruby: Synthetic Ruby or Sapphire
Alignment Sleeve: Stainless Steel/Passivate
Outer Sleeve: Stainless Steel/Passivate
Spring: Stainless Steel/Passivate.

Accessories and Assembly Notes

Alignment Sleeve, Outer Sleeve, and Spring packaged loose with assembly.
Recommended insertion/extraction tool: M81969/14-03 or equivalent.

© 2011 Glenair, Inc.

181-048
Size 16 Fiber Optic Sealing Plug
For use with MIL-DTL-38999 Series III Type Connectors

D38999 Series III

Dummy Terminus designed to seal against the rear grommet and interfacial seal of MIL-DTL-38999 connectors.



Part Number	Description
181-048-16	Dummy Terminus, size 16

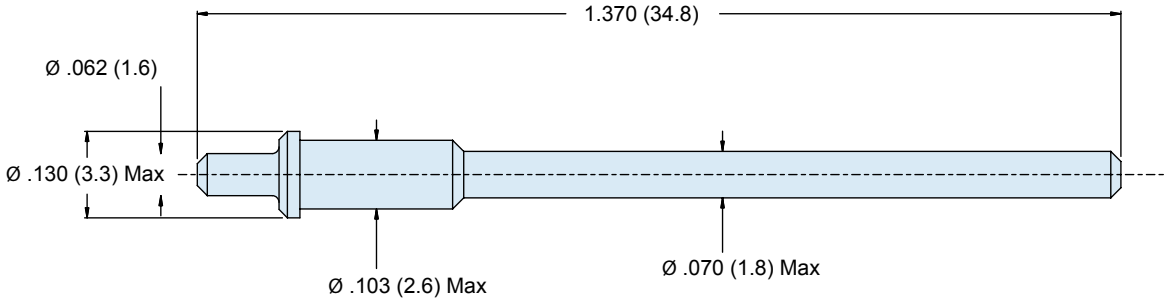

Material and Finish
Terminus: High Grade Engineering Thermoplastic

Assembly
Recommended insertion/extraction tool: P/N: M81969/14-03 or equivalent

© 2011 Glenair, Inc.

D38999 Series III

MIL-DTL-38999 Type Size 20 Pin Terminus



Part Number	Fiber Size Core/Cladding (Microns)	Typ. Fiber Type	ØA (Microns)
181-065-1255	9/125	Single Mode	125.5
181-065-126	50/125 62.5/125	Multi Mode	126.0

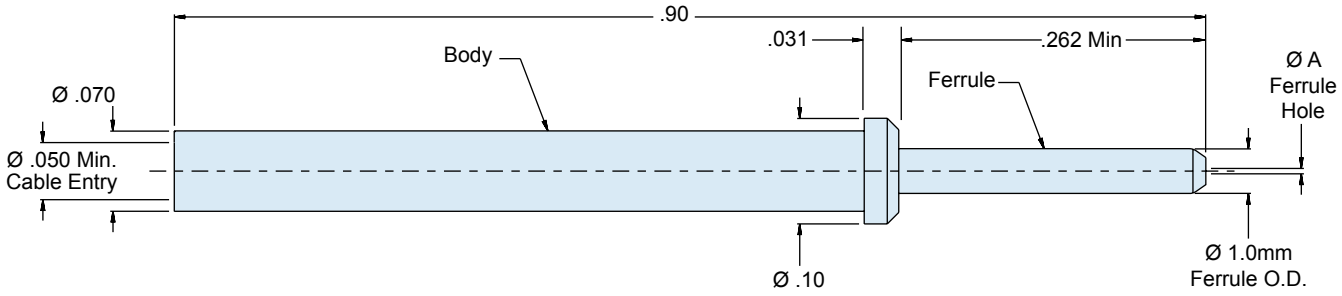

Material and Finish
Ferrule: Zirconia Ceramic
Body: Stainless Steel/Passivate

Assembly Notes
Consult factory for appropriate termination and assembly tools/procedures.

© 2011 Glenair, Inc.

181-066
Size 20 Socket Terminus
MIL-DTL-38999 Type

D38999 Series III

MIL-DTL-38999 Type Size 20 Socket Terminus



Part Number	Fiber Size Core/Cladding	Ø A (Microns)	Typ. Fiber Type
181-066-1255	9/125	125.5	Single Mode
181-066-126	50/125 & 62.5/125	126.0	Multi Mode

Terminus Accessories	
Part Number	**Terminus Accessory**
181-066-S	Ceramic Alignment Sleeve
181-066-C	Protective Cover

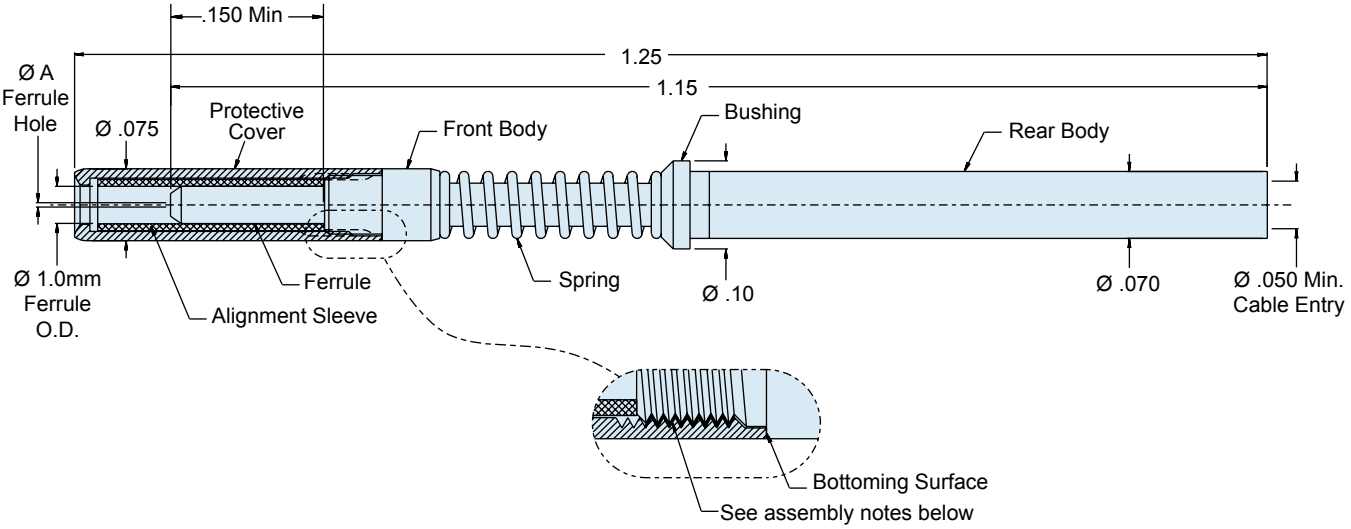

Material and Finish

Material / Finish:
Ferrule: Zirconia Ceramic
Alignment Sleeve: Zirconia Ceramic
Body (Front and Rear): Stainless Steel/Passivate
Protective Cover: Stainless Steel/Passivate
Bushing: Stainless Steel/Passivate
Spring: Stainless Steel/Passivate

Assembly Notes

Protective cover must be retained using Threadlocker “Loctite 222” prior to insertion and fully seated against terminus body as shown.

© 2011 Glenair, Inc.

M28876

Size 16 M29504/14 Fiber Optic Pin Terminus for MIL-PRF-28876 Connectors



Part Number	ØA (Microns)	Fiber Type	Fiber Size Core/Cladding (Microns)	Mil-Spec Part Number (Reference)
181-039-1250C	125.0	Single Mode	9/125	M29504/14-4140C
181-039-1255C	125.5	Single Mode	9/125	N/A
181-039-1260C	126.0	Single Mode	9/125	M29504/14-4141C
		Multi Mode	50/125, 62.5/125	M29504/14-4131C
181-039-1270C	127.0	Multi Mode	50/125, 62.5/125	M29504/14-4132C
181-039-1420C	142.0	Multi Mode	100/140	M29504/14-4135C
Consult factory for additional sizes				

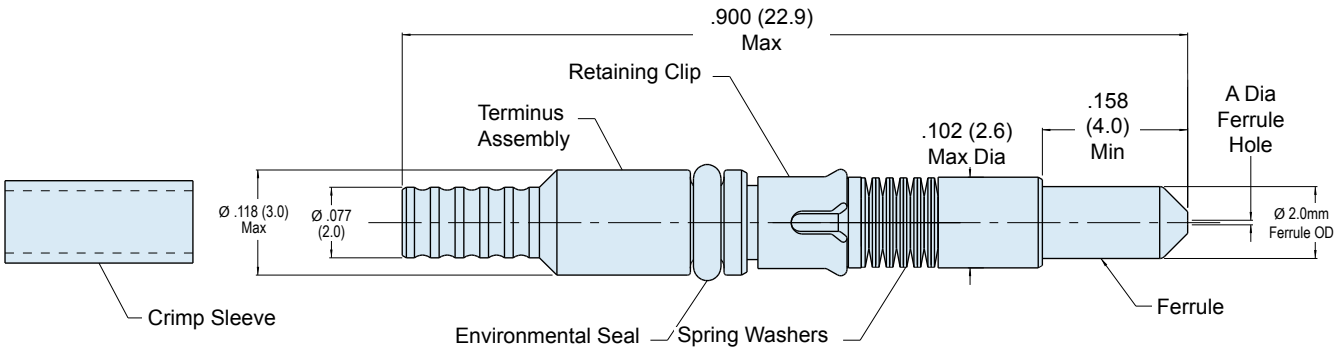

Tools and Accessories	
Part Number	Terminus Accessory
265-008	Crimp Sleeve Ø2.4mm Max Jacket (Mil-Spec Type)

Material and Finish

Ferrule: Zirconia Ceramic
Terminus Assembly: Stainless Steel/ Passivate
Retaining Clip, Spring Washers: Spring Alloy
Seal: Fluorosilicone
Crimp Sleeve: Brass Alloy/Nickel

Notes

Crimp sleeve is supplied with terminus assembly and may be ordered separately (see Table II). For terminus less crimp sleeve, omit **C** from end of part number.

Assembly

See Glenair GAP-036 for termination procedure and assembly tools.
Dummy terminus part number: 181-051

© 2011 Glenair, Inc.

181-040
M29504/15
Size 16 Fiber Optic Socket Terminus
For MIL-PRF-28876 Connectors

M28876

Size 16 M29504/15 Fiber Optic Socket Terminus for MIL-PRF-28876 Connectors



The use of fiber optics in shipboard and ship-to-shore data transmissions is growing rapidly, and the tight-tolerance MIL-PRF-28876 interconnect has become the universal standard for Navy shipboard applications. Glenair's qualified offering—including QPL'd MIL-PRF-29504/14 and /15 contacts—delivers all the necessary performance from precise optical alignment, to environmental protection, corrosion resistance and weight reduction. The Glenair MIL-PRF-28876 terminus is specifically geared for upgrade and retrofit applications where extending system life-cycles and reducing cost of ownership are principle requirements.

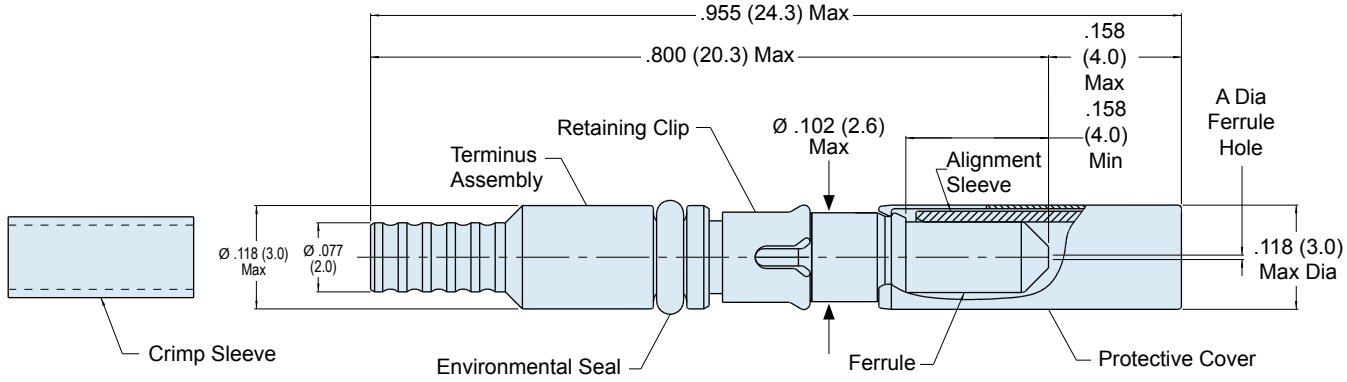

Material and Finish

Alignment Sleeve, Ferrule: Zirconia Ceramic
Protective cover: Spring Alloy / Nickel
Terminus Assembly: Stainless Steel / Passivate
Retaining Clip: Spring Alloy
Seal: Fluorosilicone
Crimp Sleeve: Brass Alloy / Nickel

Tools and Accessories/Assembly Notes

Dummy Terminus: Part Number 181-051
Crimp sleeve is supplied with terminus assembly and may be ordered separately (see Table II). For terminus less crimp sleeve omit **C** from end of part number.
Alignment sleeve assembly is supplied with terminus assembly (packaged loose) and may be ordered separately (see Table II).
See Glenair GAP-036 for termination procedure and assembly tools.

© 2011 Glenair, Inc.

Part Number	ØA (Microns)	Fiber Type	Fiber Size Core/Cladding (Microns)	Mil-Spec Part Number (Reference)
181-040-1250C	125.0	Single Mode	9/125	M29504/15-4180C
181-040-1255C	125.5	Single Mode	9/125	N/A
181-040-1260C	126.0	Single Mode	9/125	M29504/15-4181C
		Multi Mode	50/125, 62.5/125	M29504/15-4171C
181-040-1270C	127.0	Multi Mode	50/125, 62.5/125	M29504/15-4172C
181-040-1420C	142.0	Multi Mode	100/140	M29504/15-4175C
Consult factory for additional sizes				

Accessories	
Part Number	Terminus Accessory
265-010	Alignment Sleeve Assembly
265-008	Crimp Sleeve Ø2.4mm Max Jacket (Mil-Spec type)

© 2011 Glenair, Inc.

181-057
Size 16 Fiber Optic Pin Terminus
For Series 80 Mighty Mouse

Mighty Mouse

Size 16 Fiber Optic Pin Terminus for Series 80 Mighty Mouse Connectors



Part Number	ØA (Microns)	Fiber Size: Core/ Cladding (Microns)	Typ. Fiber Type
181-057-125	125.5	9/125 (Single Mode)	Single Mode
181-057-126	126.0	50/125 and 62.5/125	Multi Mode

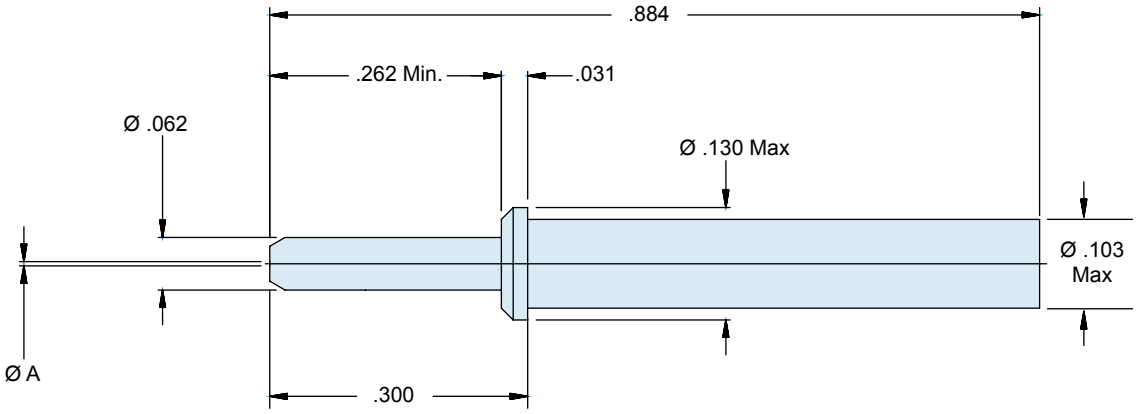

Material and Finish
Ferrule: Zirconia Ceramic
Terminus Assembly: Stainless Steel / Passivate

Assembly Notes
See Glenair GAP-039 for termination procedure and assembly tools.
Recommended insertion/extraction tool: P/N M81969/14-03

© 2011 Glenair, Inc.

Mighty Mouse

Size 16 Fiber Optic Socket Terminus for Series 80 Mighty Mouse Connectors



Part Number	ØA (Microns)	Fiber Size: Core/Cladding (Microns)	Typ. Fiber Type
181-075-125	125.5	9/125	Single Mode
181-075-126	126.0	50/125, 62.5/125	Multi Mode

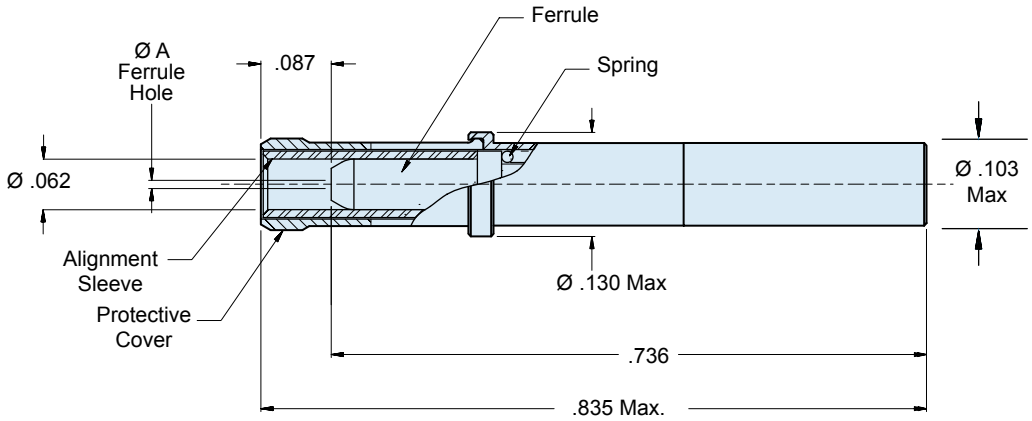

Accessories	
Part Number	Terminus Accessory
181-001-S	Ceramic Alignment Sleeve
181-075-C	Protective Cover

Material and Finish

Ferrule: Zirconia Ceramic
Terminus Assembly: Stainless Steel / Passivate
Spring: Stainless Steel / Passivate
Protective Cover: Spring Alloy / Nickel

Assembly Notes

See Glenair GAP-039 for termination procedure and assembly tools.
Recommended insertion/extraction tool: P/N M81969/14-03
Ceramic alignment sleeve and protective cover are supplied with terminus assembly and may be ordered separately (See Table II).

© 2011 Glenair, Inc.

181-011
COTS Fiber Optic Socket Terminus
Size 16 Front Release

Size 16 COTS Front Release Fiber Optic Socket Terminus



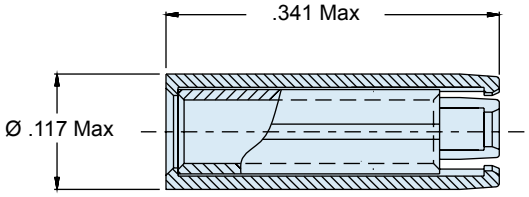

Protective cover with captive alignment sleeve

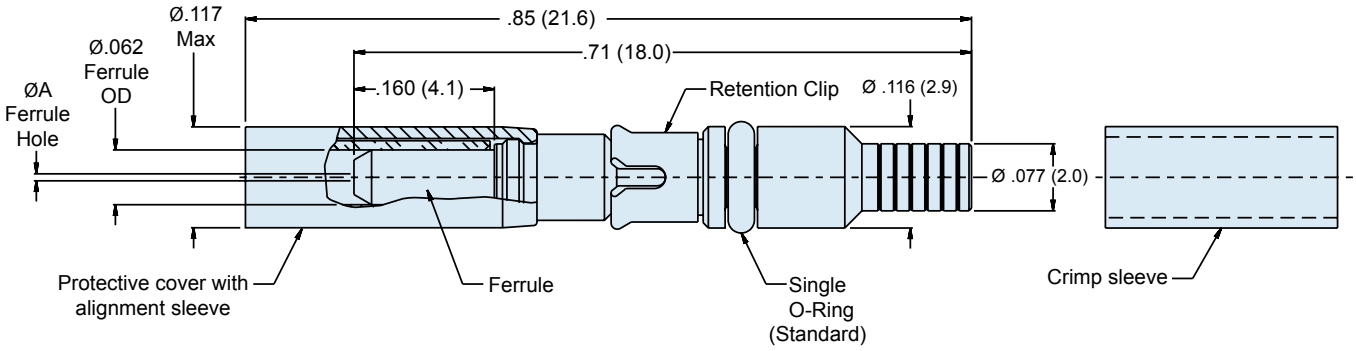

Material and Finish

Ferrule, Alignment Sleeve: Zirconia Ceramic
Protective Cover: Spring Alloy
Terminus Assembly: Stainless Steel/Passivate
Retention Clip: Spring Alloy
O-Ring: Fluorosilicone
Crimp Sleeve: Brass Alloy/Nickel

Tools and Accessories/Assembly Notes

See Glenair GAP-031 and GAP-031B for complete assembly instructions.
Alignment sleeve assembly (protective cover and alignment sleeve) and crimp sleeve are supplied with assembly. Spares may be ordered separately (See Table II).
See 181-051 for dummy terminus.

© 2011 Glenair, Inc.

Part Number	Fiber Size: Core/Cladding/Coating (Microns)	Ø A (Microns)
181-011-125	9/125 (Single Mode)	125.5
181-011-126S	9/125 (Single Mode)	126.0
181-011-126	50/125, 62.5/125	126.0
181-011-142	100/140	142.0
181-011-156	62.5/125/155 (Polyimide)	156.0
181-011-173	100/140/172 (Polyimide)	173.0
181-011-175	100/140/172 (Polyimide)	175.0
181-011-231	200/225	231.0
181-011-236	200/230	236.0
181-011-286	200/280	286.0
181-011-448	400/440	448.0

Ceramic alignment sleeve supplied with terminus. Add **K** to the end of part number development to supply with optional stainless steel alignment sleeve *e.g. 181-011-126**K***.

For dual O-ring design, add **D** to end of part number development (e.g. 181-011-126K**D**)

Accessories	
Part No.	**Terminus Accessories**
181-011-S	Protective Cover with Ceramic Alignment Sleeve
181-011-K	Protective Cover with Stainless Steel Alignment Sleeve
265-002	Crimp Sleeve, Ø2.2mm Max Jacket

© 2011 Glenair, Inc.

181-012
COTS Fiber Optic Pin Terminus
Size 16 Front Release

Size 16 COTS Front Release Fiber Optic Pin Terminus

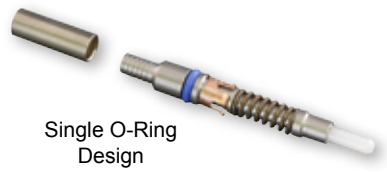

Single O-Ring Design (Standard)



Dual O-Ring Design

The unique design of the Glenair 181-011 and 181-012 series fiber optic contact allows for rapid integration of optical media in a broad range of cylindrical and rectangular connector packages and systems. By placing the retention and environmental sealing components directly on the termini, Glenair is able to fabricate unique fiber optic connector shell packages without costly tooling and engineering. The secret is the integrated retention clip and environmental O-ring located directly on the contact. Glenair's in-house expertise and capacity for machining connector shells to the precise tolerances required in optical connection systems is the other half of the story. Finished connector systems perform at insertion-loss levels equivalent to other high-performance, tactical fiber optic systems such as MIL-DTL-38999 and MIL-PRF-28876.

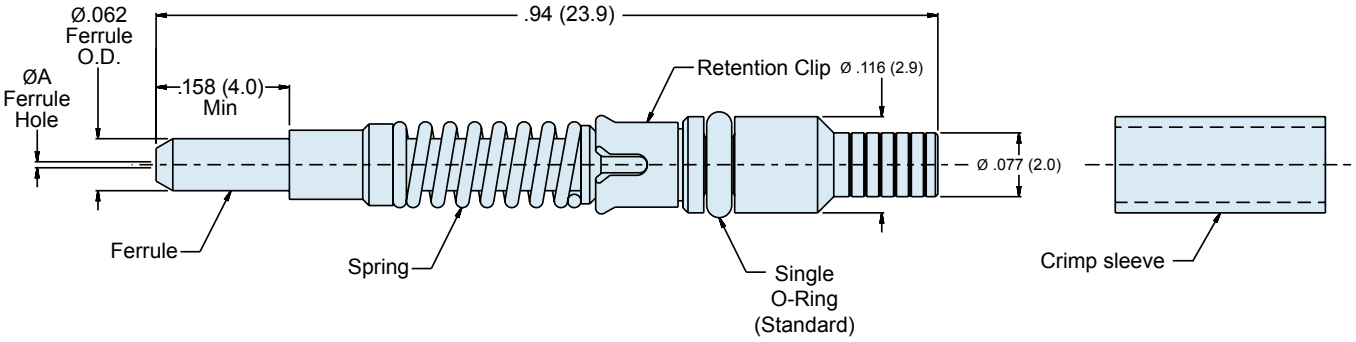

Material and Finish

Ferrule: Zirconia Ceramic

Terminus Assembly: Stainless Steel/Passivate
Spring: Stainless Steel/Passivate
Retention Clip: Spring Alloy
O-Ring: Fluorosilicone
Crimp Sleeve: Brass Alloy/Nickel

Tools and Accessories/Assembly Notes

Crimp sleeve supplied with assembly. Spares may be ordered separately (see Table II).
See Glenair GAP-031 and GAP-031B for complete assembly instructions.
See 181-051 for dummy terminus.

© 2011 Glenair, Inc.

Part Number	Fiber Size Core/Cladding/Coating (Microns)	Ø A (Microns)
181-012-125	9/125 (Single Mode)	125.5
181-012-126S	9/125 (Single Mode)	126.0
181-012-126	50/125, 62.5/125	126.0
181-012-142	100/140	142.0
181-012-156	62.5/125/155 (Polyimide)	156.0
181-012-173	100/140/172 (Polyimide)	173.0
181-012-175	100/140/172 (Polyimide)	175.0
181-012-231	200/225	231.0
181-012-236	200/230	236.0
181-012-286	200/280	286.0
181-012-448	400/440	448.0

For dual O-ring design, add **D** to end of part number development (e.g. 181-012-126**D**)

Terminus Tools and Accessories	
Part No.	**Terminus Accessories**
265-002	Crimp Sleeve, Ø 2.2mm Max Jacket

© 2011 Glenair, Inc.

181-076
Genderless Terminus
For ARINC 801 Connectors

ARINC 801

Genderless Fiber Optic Terminus for ARINC 801 Connectors, Keyed, Rear Release



Part Number	ØA (Microns)	Typ. Fiber Type	Pull-Proof
181-076-N-1255	125.5	Single Mode	no
181-076-N-126S	126.0	Single Mode	no
181-076-N-126	126.0	Multi Mode	no
181-076-P-1255	125.5	Single Mode	yes
181-076-P-126S	126.0	Single Mode	yes
181-076-P-126	126.0	Multi Mode	yes
Consult factory for additional sizes.			

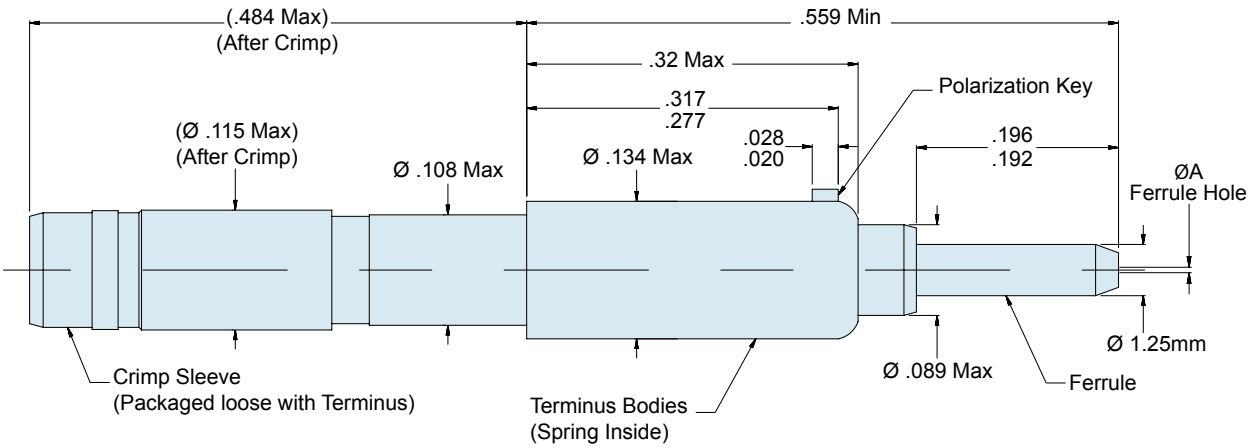

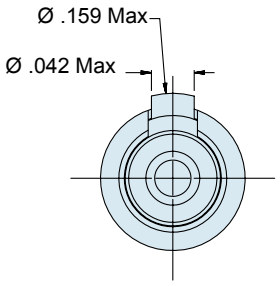

Material and Finish

Ferrule: Zirconia Ceramic
Terminus Bodies: Brass Alloy/Nickel
Crimp Sleeve: Brass Alloy/Nickel
Spring: Stainless Steel/Passivate

Specifications

Terminus Accommodates cable diameter 1.73mm (.068) minimum and 2.00mm (.079) maximum.
Pull-proof termini are for use with loose structure cable.

© 2011 Glenair, Inc.

Size 16 Fiber Optic M29504/6 Type Pin Terminus



Part Number	Fiber Size Core/Cladding/Coating (Microns)	ØA (Microns)
187-079-125	9/125 (Single Mode)	125.5
187-079-126	50/125 & 62.5/125	126.0
187-079-142	100/140	142.0
187-079-156	62.5/125/155 (Polyimide)	156.0
187-079-175	100/140/172 (Polyimide)	175.0
187-079-231	200/230	231.0
187-079-236	200/233	236.0
187-079-286	200/280	286.0
187-079-448	400/440	448.0

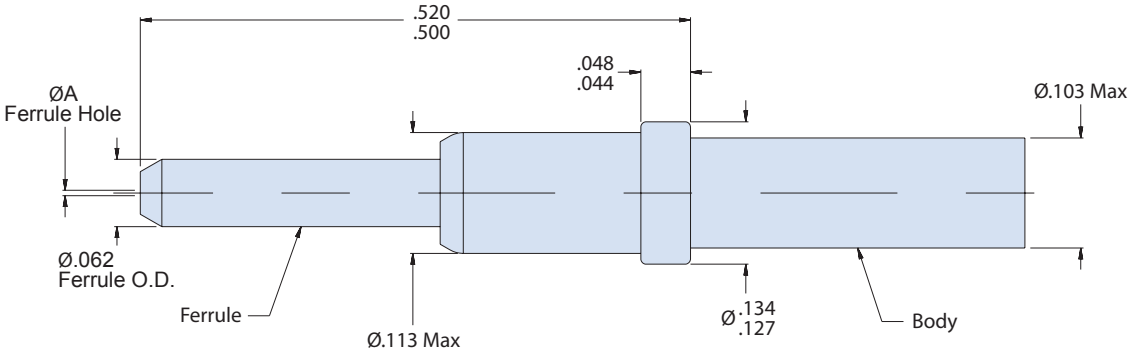

Material and Finish

Ferrule: Zirconia Ceramic
Body: Stainless Steel/Passivate

Specifications

Terminus is also designed for use with Glenair 187-100 Combo D-Sub Receptacle connector.

© 2011 Glenair, Inc.

187-080
Size 16 M29504/7 Type Socket Terminus
For ARINC 600 and 404 Connectors

Size 16 Fiber Optic M29504/7 Type Socket Terminus



The precision design of the Glenair 187-080 and 187-079 series fiber optic contacts for ARINC type connectors enables reliable and repeatable integration of optical media into industry-standard ARINC connector systems. The Glenair M29504/7 Type socket terminus and M29504/6 Type pin terminus provide low dB loss performance. The precision ceramic ferrule and alignment sleeve ensure precise optical alignment of fiber media. Available for singlemode and multimode glass fiber as well as 155.0 and 172.0 micron polyimide media.

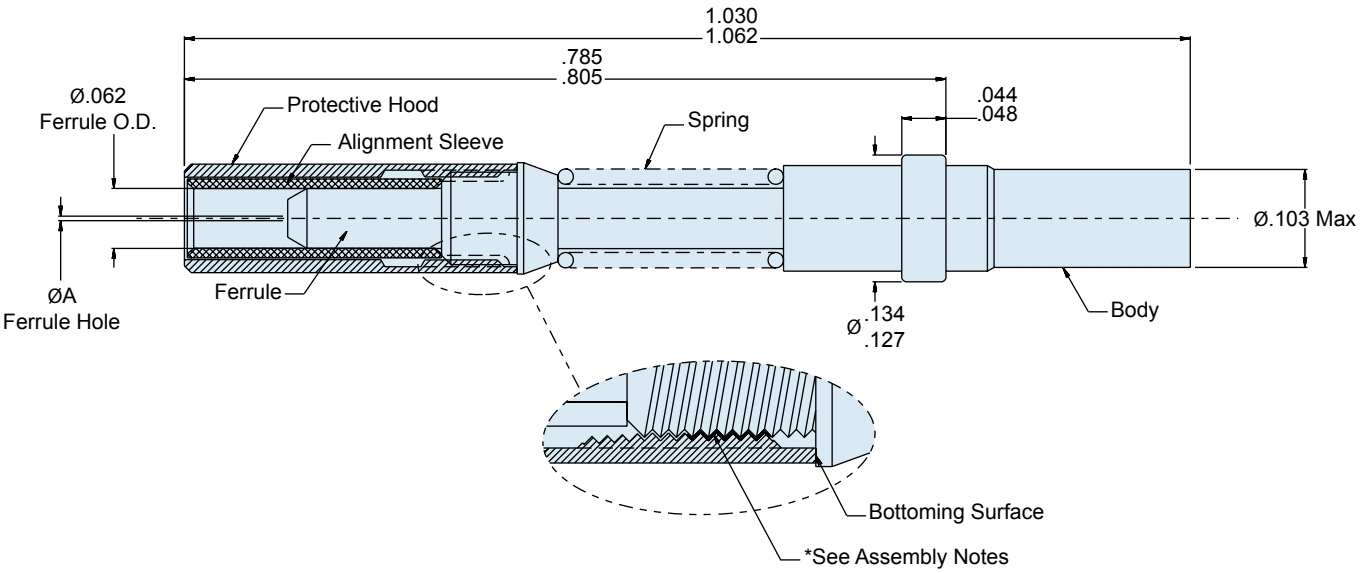

Material and Finish

Ferrule, Alignment Sleeve: Zirconia Ceramic
Body, Spring and Protective Hood: Stainless Steel/Passivate

Tools and Accessories/Assembly Notes

Alignment Sleeve and Protective Cover can also be ordered separately (Table II)
*Threaded Protective cover must be retained using Threadlocker "Loctite 222" prior to insertion and fully seated against terminus body as shown.

© 2011 Glenair, Inc.

Part Number	Fiber Size Core/Cladding/Coating (Microns)	ØA (Microns)
187-080-125	9/125 (Single Mode)	125.5
187-080-126	50/125 & 62.5/125	126.0
187-080-142	100/140	142.0
187-080-156	62.5/125/155 (Polyimide)	156.0
187-080-175	100/140/172 (Polyimide)	175.0
187-080-231	200/230	231.0
187-080-236	200/233	236.0
187-080-286	200/280	286.0
187-080-448	400/440	448.0

Terminus Accessories	
Part Number	Terminus Accessory
181-001-S	Ceramic Alignment Sleeve
181-001-C	Protective Cover

© 2011 Glenair, Inc.

181-056
GHD • Glenair High Density
Fiber Optic Genderless Terminus
Size 18 Non-Keyed Terminus

Glenair High Density

Size 18 Non-Keyed Front Release Glenair High Density (GHD) Genderless Terminus



The Glenair High Density Fiber Optic Connector System is designed for applications that require reduced size and weight as well as outstanding optical and environmental performance. The System offers insertion loss values less than .5dB (typical loss for Glenair termini is .3 dB). Dense cavity spacing is acheived with an innovative front release terminus design and accomodation for M85045/16 cable. The genderless 18 gauge GHD contact delivers nearly double the density of M28876 and D38999 with superior optical performance.

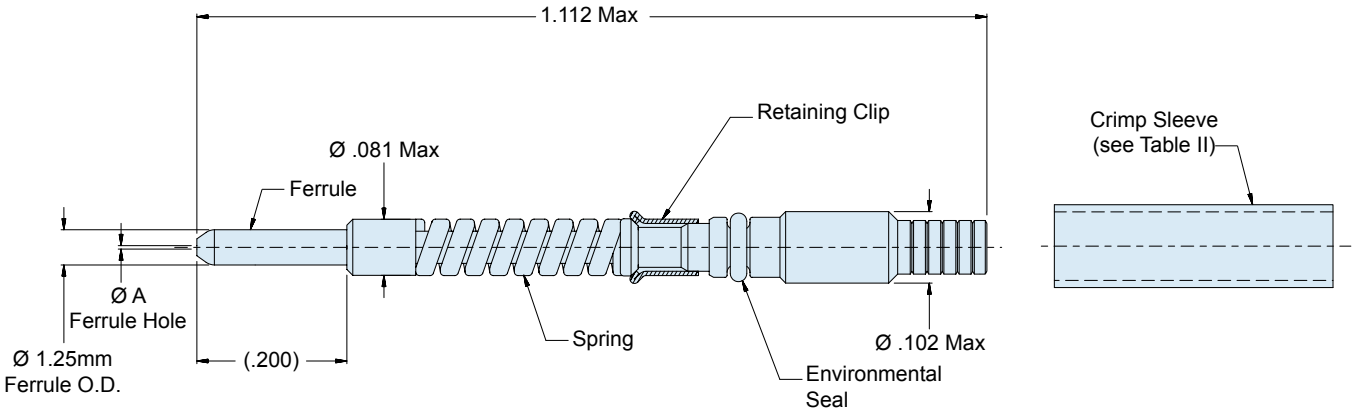

Material and Finish

Ferrule: Zirconia Ceramic
Terminus Assembly: Stainless Steel/Passivate
Retaining Clip: Spring Alloy
Spring: Stainless Steel/Passivate
Seal: Fluorosilicone
Crimp Sleeve: Brass Alloy/Nickel

Tools and Accessories/Assembly Notes

Crimp Sleeve is supplied with Terminus Assembly, and may be ordered separately (see Table II).
For terminus less crimp sleeve, omit **C** from end of part number (e.g. ***181-056-1260***)
See Glenair assembly procedure GAP-032 for complete termination instructions.

© 2011 Glenair, Inc.

Part Number	ØA (Microns)	Typ. Fiber Type
181-056-1250C	125.0	Single Mode
181-056-1255C	125.5	Single Mode
181-056-1260C	126.0	Single Mode OR Multi Mode
181-056-1270C	127.0	Multi Mode
181-056-1420C	142.0	Multi Mode
181-056-1450C	145.0	Multi Mode
181-056-1560C	156.0	Multi Mode
181-056-1570C	157.0	Multi Mode
181-056-1730C	173.0	Multi Mode
181-056-1750C	175.0	Multi Mode
181-056-2360C	236.0	Multi Mode
181-056-2860C	286.0	Multi Mode
181-056-4480C	448.0	Multi Mode

CRIMP SLEEVE	
Part Number	**Description**
265-002	Crimp Sleeve Ø2.2mm Max Jacket

© 2011 Glenair, Inc.

181-047
GHD • Glenair High Density Fiber Optic Genderless Terminus
Size 18 Keyed Terminus for APC Polish

Glenair High Density

Size 18 Glenair High Density (GHD) Fiber Optic Genderless Terminus, Keyed for APC Polish

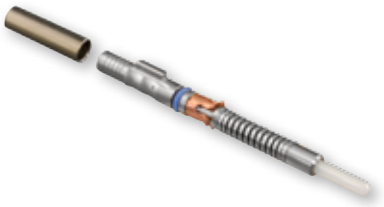

The Glenair High Density Fiber Optic Connector System is designed for applications that require reduced size and weight as well as outstanding optical and environmental performance. The System offers insertion loss values less than .5dB (typical loss for Glenair termini is .3 dB). Dense cavity spacing is acheived with an innovative front release terminus design and accomodation for M85045/16 cable. The 181-047 version is equipped with a single keying feature for APC polish.

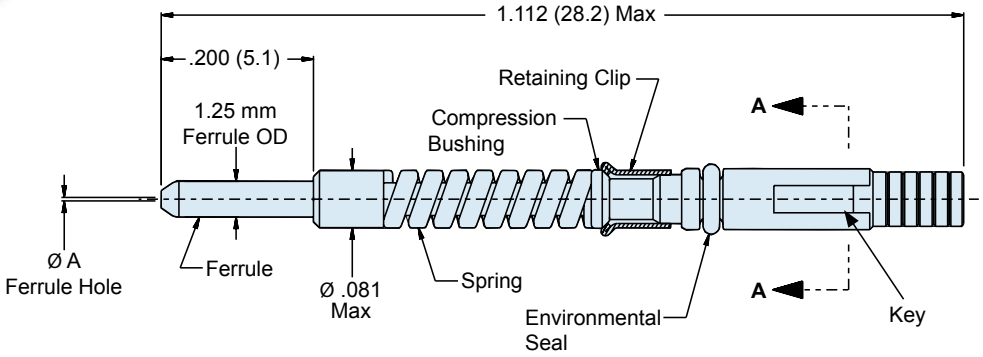

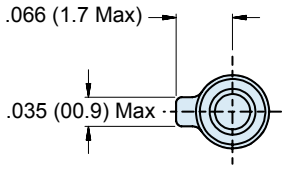

View A-A

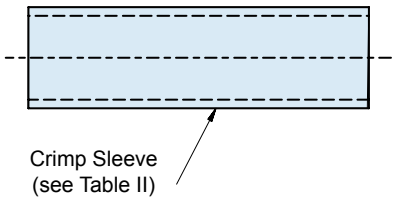

Material and Finish

Ferrule: Zirconia Ceramic
Terminus Assembly: Stainless Steel/ Passivate
Retaining Clip: Spring Alloy
Spring: High Tensile Stainless Steel/ Passivate
O-Ring: Fluorosilicone
Crimp Sleeve: Brass Alloy/Nickel

Tools and Accessories

Crimp Sleeve is supplied with Terminus Assembly, and may be ordered separately (see Table II).
For terminus less crimp sleeve, omit **C** from end of part number (e.g. ***181-047-1260***)
See Glenair assembly procedure GAP-032 for complete termination instructions.

© 2011 Glenair, Inc.

Part Number	ØA (Microns)	Typ. Fiber Type
181-047-1250C	125.0	Single Mode
181-047-1255C	125.5	Single Mode
181-047-1260C	126.0	Single Mode OR Multi Mode
181-047-1270C	127.0	Multi Mode
181-047-1420C	142.0	Multi Mode
181-047-1450C	145.0	Multi Mode
181-047-1560C	156.0	Multi Mode
181-047-1570C	157.0	Multi Mode
181-047-1730C	173.0	Multi Mode
181-047-1750C	175.0	Multi Mode
181-047-2360C	236.0	Multi Mode
181-047-2860C	286.0	Multi Mode
181-047-4480C	448.0	Multi Mode

CRIMP SLEEVE	
Part Number	**Description**
265-002	Crimp Sleeve Ø2.2mm Max Jacket

© 2011 Glenair, Inc.

181-058
GHD • Glenair High Density
Size 18 Dummy Terminus

Glenair High Density

Glenair High Density (GHD) Size 18 Fiber Optic Dummy Terminus



Description	Part Number
Dummy Terminus, size 18	181-058

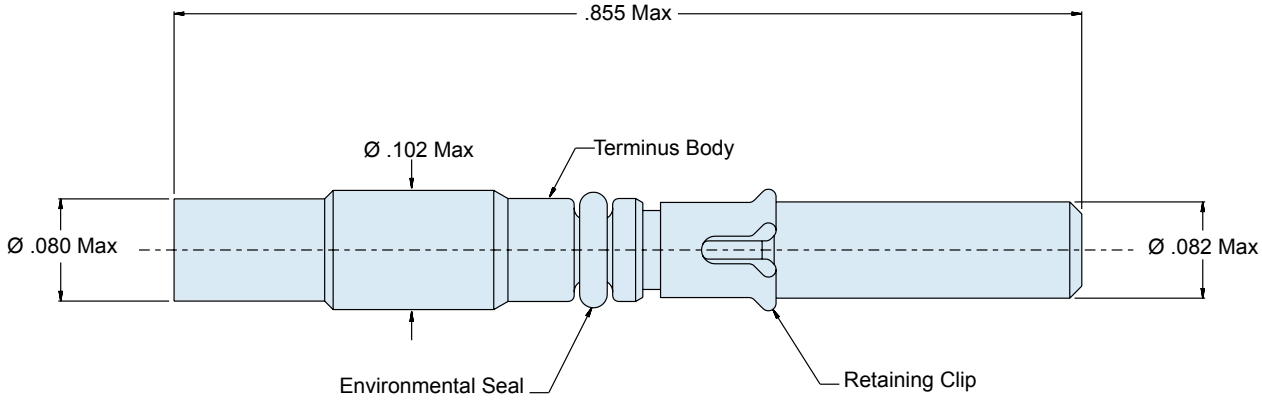

C

Material and Finish
Terminus Body: Stainless Steel/Passivate
Retaining Clip: Spring Alloy
Environmental Seal: Fluorosilicone

© 2011 Glenair, Inc.

M28876

MIL-PRF-28876 Size 16 Dummy Terminus



Description	Part Number
Dummy Terminus, size 16	181-051

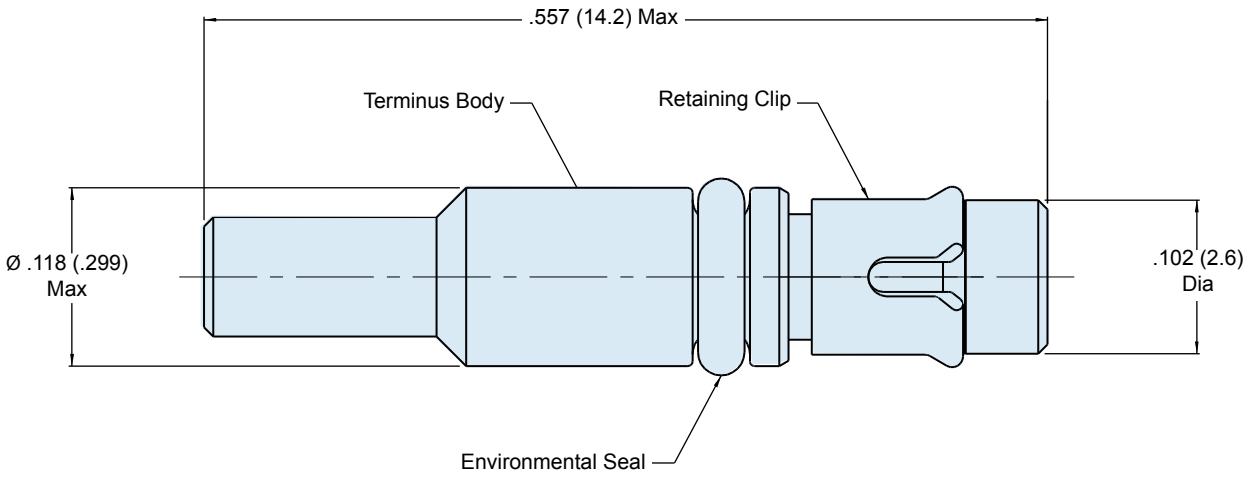

Material and Finish

Terminus Body: Stainless Steel/Passivate
Retaining Clip: Spring Alloy/Nickel
Seal: Fluorosilicone

Tools and Accessories/Assembly Notes

See Glenair GAP-036 for assembly tools and procedures.

© 2011 Glenair, Inc.

181-050
M29504/16 Type
Genderless GFOCA Fiber Optic Terminus

GFOCA

M29504/16 Type Genderless GFOCA Fiber Optic Terminus



Most commonly used by the army for long-run battlefield communications, the GFOCA Connection System is also well suited to dockside naval communications, down-hole drilling and other harsh environment applications. The hermaphroditic system utilizes low insertion loss butt-joint termini and a ruggedized coupling mechanism for reliable, repeatable mating. The genderless mating system is rated to 1000-2000 cycles depending on fiber media selection.

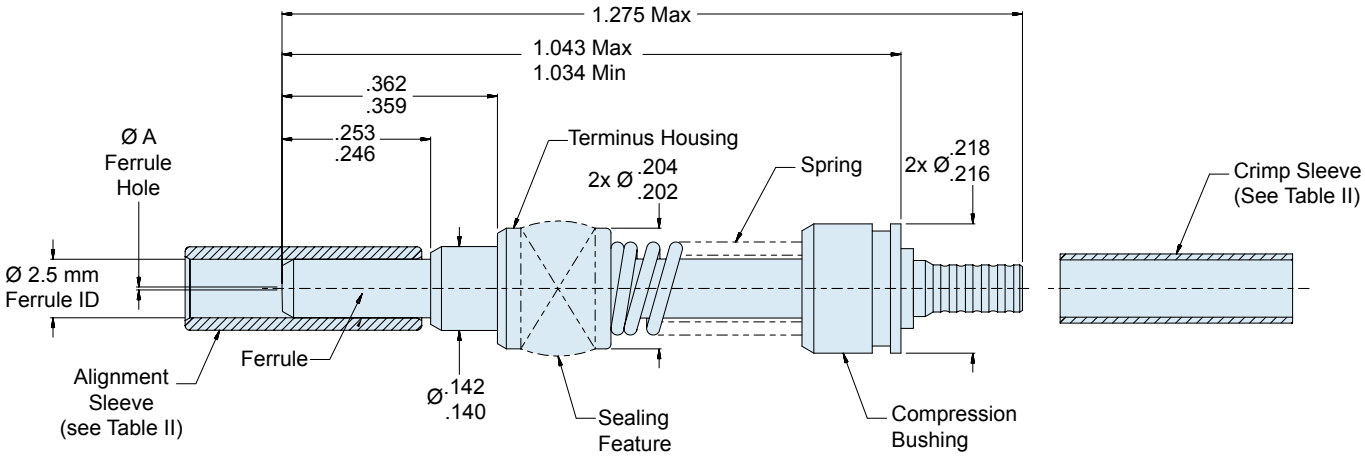

Material and Finish

Ferrule: Ceramic
Terminus Housing: Stainless Steel/Passivate
Spring: Stainless Steel/Passivate
Compression Bushing: Stainless Steel/Passivate
Crimp Sleeve: Brass Alloy/Nickel
Seal(s): Elastomeric Rubber

Specifications

Terminus is designed to meet the general requirements of MIL-PRF-29504/16
Terminus is intended for use with the following connectors:
180-116: Plug, Hermaphroditic
180-117: Recp, Jam Nut Mount
180-125: Recp, Flange Mount

Tools and Accessories/Assembly Notes

Alignment Sleeve (not supplied with Terminus) may be ordered separately (see table II)
Crimp sleeve is supplied with terminus assembly, and may be ordered separately. For terminus less crimp sleeve, omit **C** from end of part number (e.g. ***181-050-1260***)

© 2011 Glenair, Inc.

Part Number	ØA (Microns)	Fiber Type (Typical)
181-050-1250C	125.0	Single Mode
181-050-1255C	125.5	Single Mode
181-050-1260C	126.0	Single Mode AND Multi Mode
181-050-1270C	127.0	Multi Mode
181-050-1420C	142.0	Multi Mode
181-050-2300C	230.0	Multi Mode

Accessories	
Part Number	**Terminus Accessory**
181-050-S	Split Ceramic Alignment Sleeve
265-008	Crimp Sleeve, Ø2.4mm Max Cable Jacket

© 2011 Glenair, Inc.

181-059
GFOCA Fiber Optic Dummy Terminus

GFOCA

GFOCA Fiber Optic Dummy Terminus



Description	Part Number
GFOCA Dummy Terminus	181-059

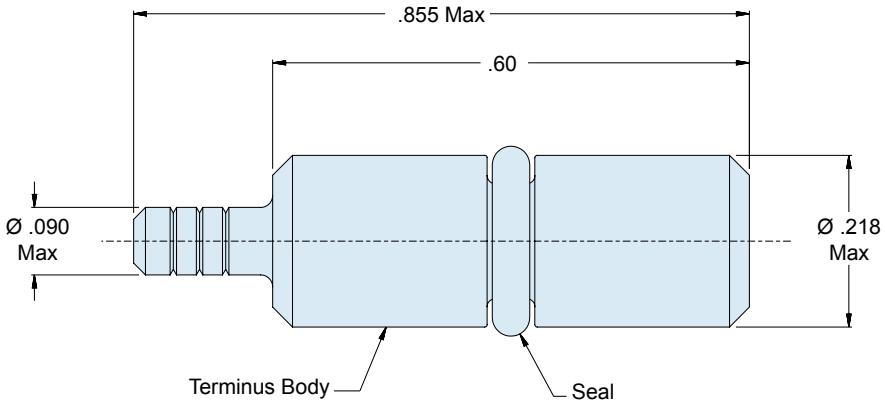

Material and Finish

Terminus Body: Stainless Steel/Passivate
Seal: Elastomer

Specifications

Terminus is intended for use with the following connectors:

180-116: Plug, Hermaphroditic
180-117: Receptacle, Jam Nut Mount
180-125: Receptacle, Flange Mount

© 2011 Glenair, Inc.

NGCON

M29504/18 (NGCON) Genderless Rear Release Pin with Integrated Retention Clip



Part Number	ØA (Microns)	Fiber Type (Typical) Typical Fiber Type	Size Core/Cladding/Coating (Microns)	Mil-Spec Style M29504/18-XXX (Reference)
181-043-1250C	125.0	SM	9/125	-101, -201, -204
181-043-1255C	125.5	SM	9/125	-102, -202, -205
181-043-126SC	126.0	SM	9/125	-103, -203, -206
181-043-126C	126.0	MM	50/125, 62.5/125	-126, -226
181-043-127C	127.0	MM	50/125, 62.5/125	-127, -227
181-043-142C	142.0	MM	100/140	-242
181-043-145C	145.0	MM	100/140	-245
181-043-156C	156.0	MM	62.5/125/155	-256
181-043-157C	157.0	MM	62.5/125/155	-257
181-043-173C	173.0	MM	100/140/172	-273
181-043-175C	175.0	MM	100/140/172	-275

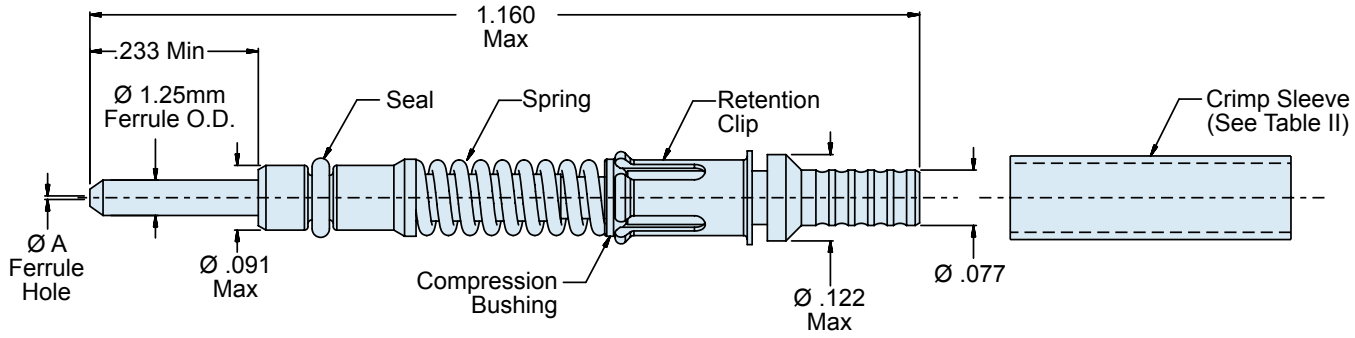

Crimp Sleeve	
Part No.	Description
265-008	Crimp Sleeve, Ø2.4mm Max Jacket (MIL-SPEC Type)

Material and Finish

Ferrule: Zirconia Ceramic
Terminus Assembly: Stainless Steel/Passivate
Retention Clip: Spring Alloy
Spring: Stainless Steel/Passivate
Seal: Elastomeric Rubber
Crimp Sleeve: Brass Alloy/Nickel

Accessories

See Glenair GAP-044 for termination assembly instructions and appropriate tools.
Crimp sleeve is supplied with terminus assembly and may be ordered separately (see Table II).
For terminus less crimp sleeve, omit C from part number (e.g. ***181-043-126***)

© 2011 Glenair, Inc.

SERIES 80

MIGHTY MOUSE

- **Up To 71% Weight Savings and 52% Size Savings Compared to MIL-DTL-38999**
- **The World's Best Availability—Thousands of Part Numbers In Stock and Ready for Immediate Same-Day Shipment**





Series 801
Mighty Mouse
7 Contacts

MIL-DTL-38999
6 Contacts

Glenair®

1211 Air Way • Glendale, CA 91201-2497 • Tel: 818-247-6000 • Fax: 818-500-9912 • E-Mail: sales@glenair.com

Special Purpose

High Performance Contacts: Thermocouple, Pneumatic, PC Tail, High Power, Solder Cup and More

A Solution for Every Challenge

Glenair produces a wide range of special purpose contacts including high power and high ampacity contacts, pneumatic contacts, PC Tail contacts for board terminations and thermocouple contacts for use in temperature measuring applications. We also produce all the small accessory items, such as sealing plugs, that make us a convenient one-stop-shopping destination for users of high-performance Mil-Spec and commercial connectors and contacts.

We invite our customers to take advantage of the breadth and depth of our contact product line, especially its high-availability and our willingness to engineer unique and special-purpose contact solutions for virtually any interconnect challenge.

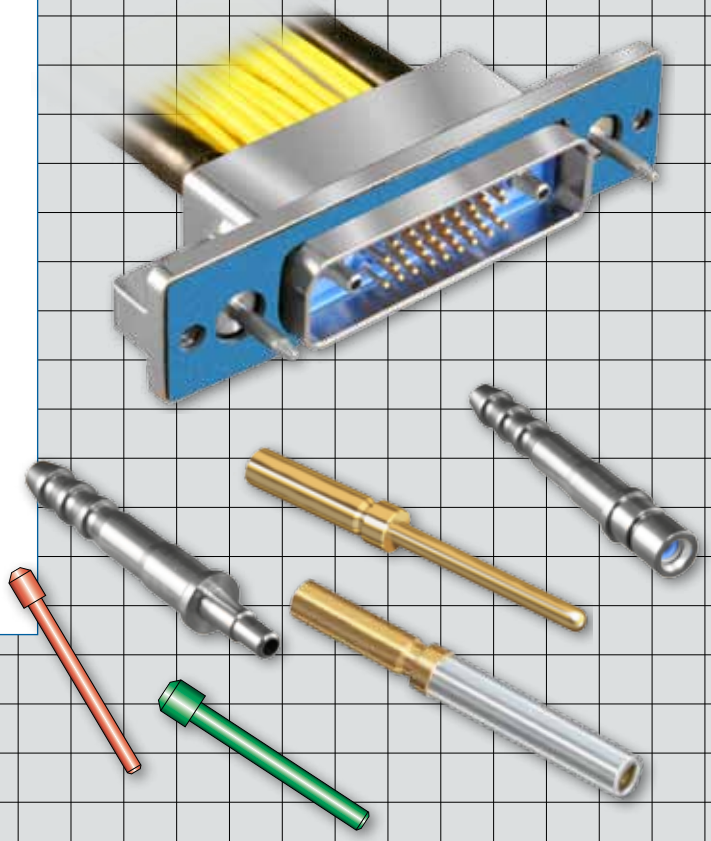

- SAE-AS39029 QPL'd and Commercial Contacts
- Same Day Inventory on Popular and Hard-to-Find Styles
- Highest Quality Materials Including Enhanced Durability Plating
- Unique and Hard-to-Find Contacts

© 2011 Glenair, Inc.
CAGE Code 06324
Printed in U.S.A.

GLENAIR, INC. • 1211 AIR WAY • GLENDALE, CA 91201-2497 • 818-247-6000 • FAX 818-500-9912
www.glenair.com
E-Mail: sales@glenair.com

Special Purpose Contacts Selection Guide

Glenair Part Number	Part Description	Contact Size	Type	Product Page
859-012	Grommet Sealing Plugs (MS27488 Type)	0-23	Sealing Plug	D-3
809-001	Series 80 Mighty Mouse Pin Contact	23	Crimp Contact	D-4
809-002	Series 80 Mighty Mouse Socket Contact	23	Crimp Contact	D-5
830-004	Pneumatic Socket Contact for Series 79, Series 80 and D38999 Series II	12	Pneumatic	D-6
830-005	Pneumatic Socket Contact for Series 79, Series 80 and D38999 Series I, III, IV	12	Pneumatic	D-6
830-003	Pneumatic Pin Contact for Series 79, Series 80 and D38999 Series I, II, III, IV	12	Pneumatic	D-7
850-010	PCB Pin Contact to fit D38999/20 and /24	12-22	PCB Pin	D-8
850-011	PCB Socket Contact to fit D38999/20 and /24	12-22	PCB Socket	D-9
850-013	High Power Socket Contact	8	Power Socket	D-10
850-014	High Power Pin Contact	8	Power Pin	D-11
850-015	M39029/56 Type Socket Contact with Solder Cup	10-22	Solder Cup	D-12
850-016	Pin Contact with Solder Cup	10-22	Solder Cup	D-14
850-017	M39029/58 Type Pin Contact with Solder Cup	12-22	Solder Cup	D-16
850-018	M39029/56-348 Type Socket Contact	22	Crimp Contact	D-18
850-019	M39029/58-360 Type Pin Contact	22	Crimp Contact	D-19
850-020	M39029/57 Type Socket Contact	22	Crimp Contact	D-20
857-027	M39029/58 Type High Power Pin with PC Tails	8	PCB Power	D-21
857-028	M39029/56 Type High Power Socket with PC Tails	8	PCB Power	D-22
687-348	Wire to Contact Crimp Adapter	4-22	Crimp Adapter	D-23
850-023	M39029/87 Thermocouple Pin Contact	16-22	Thermocouple	D-24
850-024	M39029/88 Thermocouple Socket Contact; Series I, II, IV	16-22	Thermocouple	D-26
850-025	M39029/89 Thermocouple Socket Contact; Series II	16-22	Thermocouple	D-28

© 2011 Glenair, Inc.
CAGE Code 06324
Printed in U.S.A.

GLENAIR, INC. • 1211 AIR WAY • GLENDALE, CA 91201-2497 • 818-247-6000 • FAX 818-500-9912
www.glenair.com
E-Mail: sales@glenair.com

Grommet Sealing Plugs

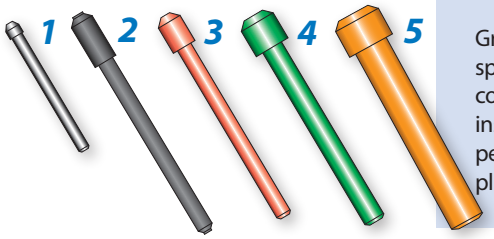

Grommet sealing plugs are used to seal unwired contact cavities. The size #23 sealing plug is specially designed to fit Glenair Series 80 Mighty Mouse grommets. Sizes 20 through 0 plugs conform to MS27488 requirements. After installing unwired contacts into unused cavities, insert knob end of sealing plug into grommet until it bottoms against the unwired contact per illustration. Install sealing plugs with standard contact insertion/extraction tools . Size #23 plug is polyphenylsulphone, other sizes are per MS27488 requirements.

Fig.	Size	Color	Part Number	Military Part Number	Insertion/ Extraction Tool	A Ref.		B Ref.		C Ref.		D Ref.	
						in.	mm.	in.	mm.	in.	mm.	in.	mm.
1	#23	Black	809-155	(None)	M81969/14-01	.040	1.02	.51	13.0	.052	1.32	.050	1.27
2	#22	Black	859-021	MS27488-22-2	M81969/14-01	.041	1.05	.643	16.33	0.062	1.57	.125	3.17
3	#20	Red	859-012	MS27488-20-2	M81969/14-11	.053	1.35	.81	20.8	.085	2.16	.125	3.18
4	#16	Green	859-013	MS27488-16-2	M81969/14-03	.074	1.88	.87	22.1	.125	3.18	.125	3.18
5	#12	Orange	859-014	MS27488-12-2	M81969/14-04	.120	3.05	.84	21.3	.165	4.19	.125	3.18
N/A	#8	Red		MS27488-8-3	Not Recommended	.170	4.32	1.19	30.2	.310	7.87	.125	3.18
N/A	#4	Blue		MS27488-4-3	Not Recommended	.278	7.06	1.19	30.2	.409	10.39	.125	3.18
N/A	#0	Yellow		MS27488-0-3	Not Recommended	.423	10.74	1.07	27.2	.601	15.27	.125	3.18

D

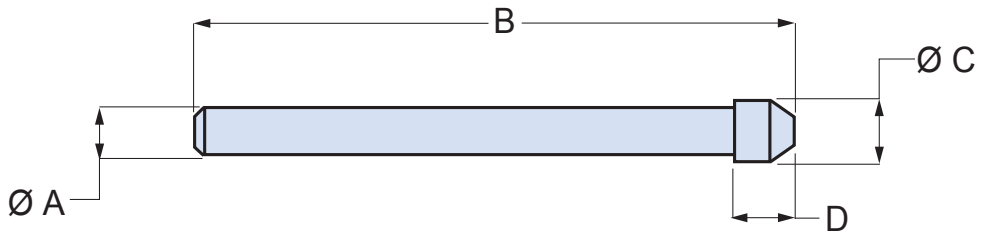



Installation of Sealing Plugs

"It is recommended to install unwired contacts in unused holes.
Insert sealing plug behind each unwired contact. Push sealing plug (large end first) until seated."

(NAVAIR 01-1A-505–1 Installation manual)

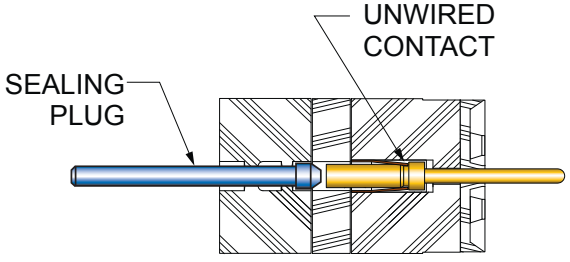

© 2011 Glenair, Inc.

809-001
#23 Electrical Pin Contact
For Series 79 Micro-Crimp and Series 80 Mighty Mouse

Size #23 Crimp Pin Contact for Micro-Crimp and Mighty Mouse Connectors

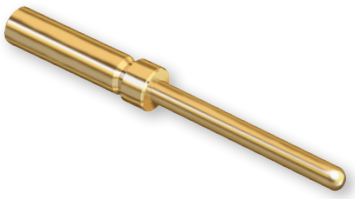

Contact Type	Wire Size	Material	Part Number	Ø A In.	Ø A mm.	Color Band
Pin	#22 – #28	BeCu	**809-001**	.0335-.0355	0.851-0.902	None
Pin	#26 – #30	BeCu	**809-042**	.0229-.0245	0.582-0.622	Blue
Pin	#22 – #28	Alumel	**809-065A**	.0335-.0355	0.851-0.902	None
Pin	#22 – #28	Chromel	**809-065C**	.0335-.0355	0.851-0.902	None

Standard size #23 contacts accept #22 to #28 AWG wire. Choose "small bore" versions for #26 to #30 AWG wire. For thermocouple applications, specify alumel or chromel contacts. Contacts are bulk packaged. Terminate with standard M22520 crimper with special positioner.

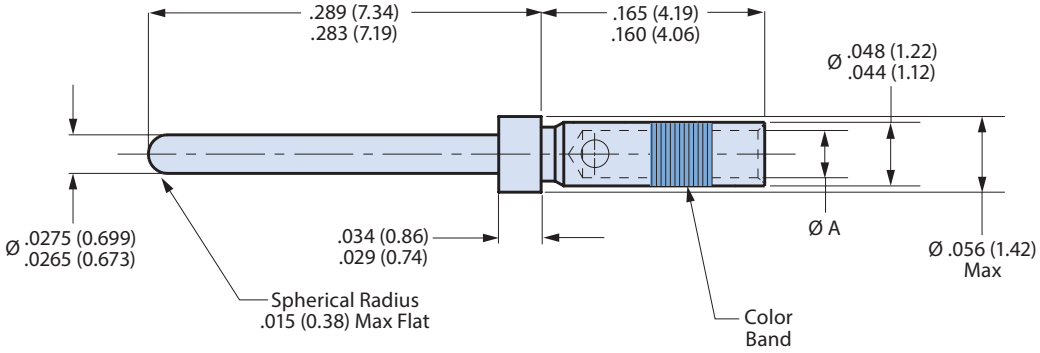

D

CRIMP TENSILE STRENGTH

Values are in pounds and are minimums.

Wire Gage	Silver or Tin Coated Copper Wire	Nickel Coated Copper Wire
#22	12	8
#24	8	6
#26	5	3
#28	3	2
#30	1.5	1.5

Material and Finish

Beryllium copper alloy per ASTM B196 or B197. 50 microinches minimum gold plated per ASTM B 488 over nickel underplate. Crimp area may have less plating.
Socket contact hood: stainless steel, passivated per AMS-QQ-P-35.

Specifications

Current Rating: 5 Amps maximum
Voltage Drop (at 5 Amps and 25° C): 70 millivolts maximum
Temperature Range: -65° to + 200° C
Socket Contact Minimum Separation Force: 0.5 ounces

Crimp Tools and Insertion/Extraction Tools

Crimper: 809-015 or AFM8
Positioner: 809-005 (standard). Use P/N 809-057 for small bore contacts 809-042 and 809-043
Standard Insertion/Extraction Tool: 809-088

© 2011 Glenair, Inc.

809-002
#23 Electrical Socket Contact
For Series 79 Micro-Crimp and Series 80 Mighty Mouse

Size #23 Crimp Socket Contact for Micro-Crimp and Mighty Mouse Connectors

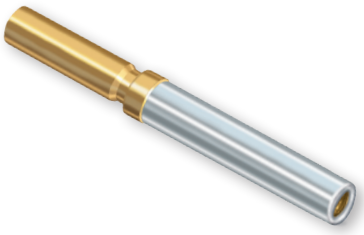

Contact Type	Wire Size	Material	Part Number	Ø A In.	Ø A mm.	Color Band
Socket	#22 – #28	BeCu	**809-002**	.0335-.0355	0.851-0.902	None
Socket	#26 – #30	BeCu	**809-043**	.0229-.0245	0.582-0.622	Blue
Socket	#22 – #28	Alumel	**809-066A**	.0335-.0355	0.851-0.902	None
Socket	#22 – #28	Chromel	**809-066C**	.0335-.0355	0.851-0.902	None

Standard size #23 contacts accept #22 to #28 AWG wire. Choose "small bore" versions for #26 to #30 AWG wire. For thermocouple applications, specify alumel or chromel contacts. Contacts are bulk packaged. Terminate with standard M22520 crimper with special positioner.

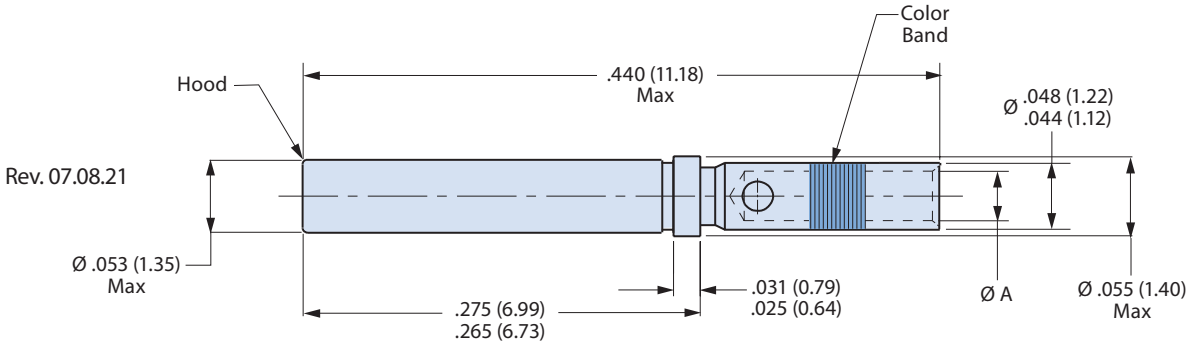

D

CRIMP TENSILE STRENGTH		
Values are in pounds and are minimums.		
Wire Gage	Silver or Tin Coated Copper Wire	Nickel Coated Copper Wire
#22	12	8
#24	8	6
#26	5	3
#28	3	2
#30	1.5	1.5

Material and Finish
Beryllium copper alloy per ASTM B196 or B197. 50 microinches minimum gold plating per ASTM B 488 over nickel underplate. Crimp area may have less plating.
Socket contact hood: stainless steel, passivated per AMS-QQ-P-35.

Specifications
Current Rating: 5 Amps maximum
Voltage Drop (at 5 Amps and 25° C): 70 millivolts maximum
Temperature Range: -65° to + 200° C
Socket Contact Minimum Separation Force: 0.5 ounces

Crimp Tools and Insertion/Extraction Tools
Crimper: 809-015 or AFM8
Positioner: 809-005 (standard). Use P/N 809-057 for small bore contacts 809-042 and 809-043
Standard Insertion/Extraction Tool: 809-088

© 2011 Glenair, Inc.

830-004 and 830-005
Size #12 Pneumatic Socket Contacts

Size #12 Pneumatic Contacts



Contact Type	For Use With	Tube I.D.	Part Number
Socket	D38999 Series II, Series 80	.094 (2.38)	830-004
Socket	D38999 Series I, III, IV	.094 (2.38)	830-005

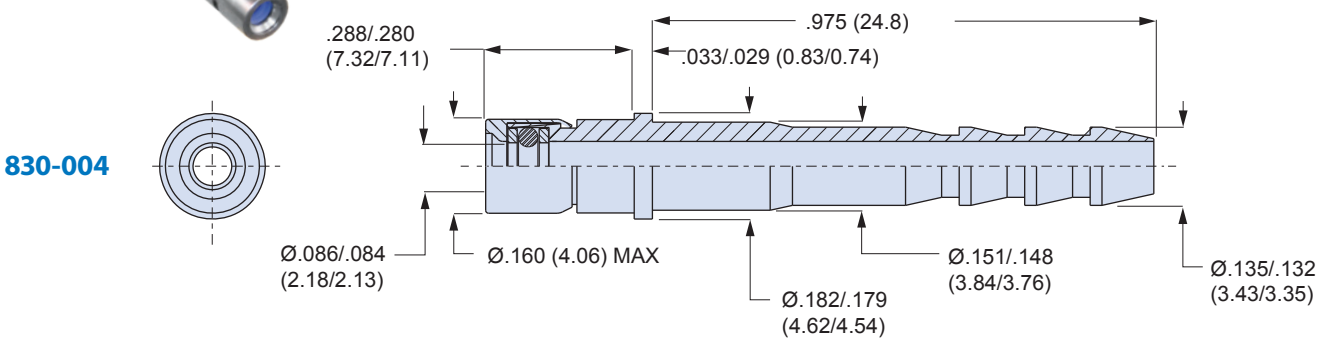

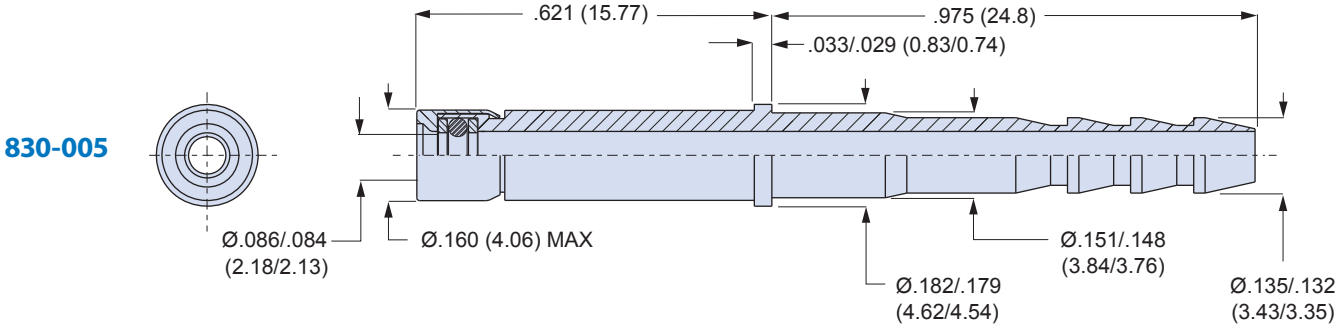

Stainless steel pneumatic contacts attach to 3/32 inch (2.38) diameter tubing. Socket contact has o-ring and PTFE backup washers. Contacts snap into size #12 connector cavities. These pneumatic contacts are rated for 100 PSI maximum air pressure. No installation tool is required. Remove contacts with plastic extraction tool 809-132.

Material and Finish

Body and Cap: stainless steel, passivated
O-ring: fluorosilicone
Washers: PTFE

Specifications

Contact may be used for air pressures up to 100±10% PSIG
Fits #12 socket contact cavities (see description for details)

Notes

High pressure pneumatic contacts available. Consult factory for more information.
For Series 79, use 857-010 and 857-011.

© 2011 Glenair, Inc.

Size #12 Pneumatic Contacts



Contact Type	For Use With	Tube I.D.	Part Number
Pin	D38999 All Series, Series 80	.094 (2.38)	830-003

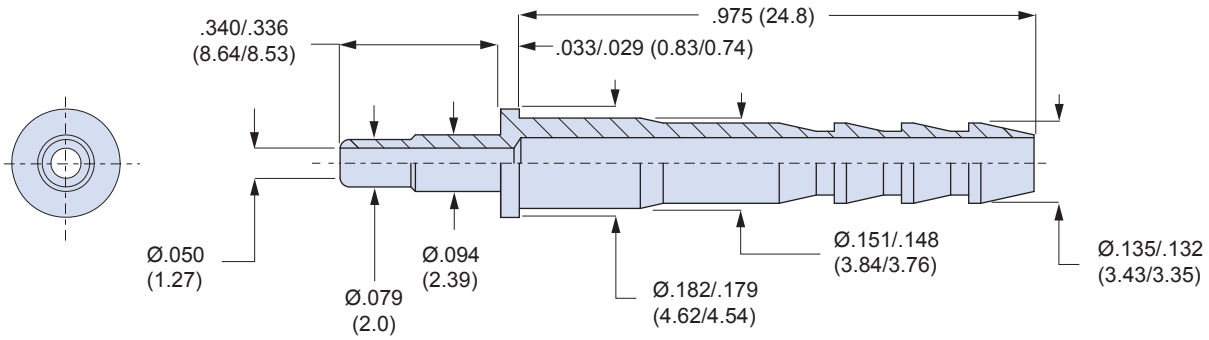

Stainless steel pneumatic contacts attach to 3/32 inch (2.38) diameter tubing. Contacts snap into size #12 connector cavities. These pneumatic contacts are rated for 100 PSI maximum air pressure. No installation tool is required. Remove contacts with plastic extraction tool 809-132.

Material and Finish

Body and Cap: stainless steel, passivated
O-ring: fluorosilicone
Washers: PTFE

Specifications

Contact may be used for air pressures up to 100±10% PSIG
Fits #12 socket contact cavities.

Notes

High pressure pneumatic contacts available. Consult factory for more information.
For Series 79, use 857-010 and 857-011.

© 2011 Glenair, Inc.

857-010
Size #12 Pneumatic Socket Contact

Size #12 Pneumatic Contacts



Contact Type	Tube I.D.	Part Number
Socket	.094 (2.38)	857-010

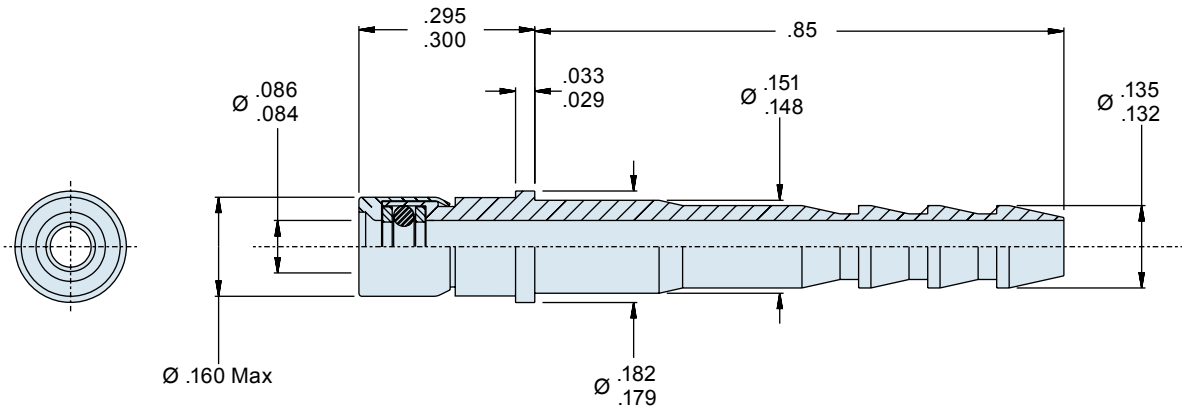

Stainless steel pneumatic contacts attach to 3/32 inch (2.38) diameter tubing. Socket contact has o-ring and PTFE backup washers. Contacts snap into size #12 connector cavities. These pneumatic contacts are rated for 200 PSI maximum air pressure. No installation tool is required. Remove contacts with plastic extraction tool 809-132.

Material and Finish

Body and Cap: stainless steel, passivated
O-ring: fluorosilicone
Washers: PTFE

Specifications

Contact may be used for air pressures up to 200±10% PSIG
Fits #12 socket contact cavities in Series 79 connectors

Notes

High pressure pneumatic contacts available. Consult factory for more information.

© 2011 Glenair, Inc.

Size #12 Pneumatic Contacts



Contact Type	Tube I.D.	Part Number
Pin	.094 (2.38)	857-011

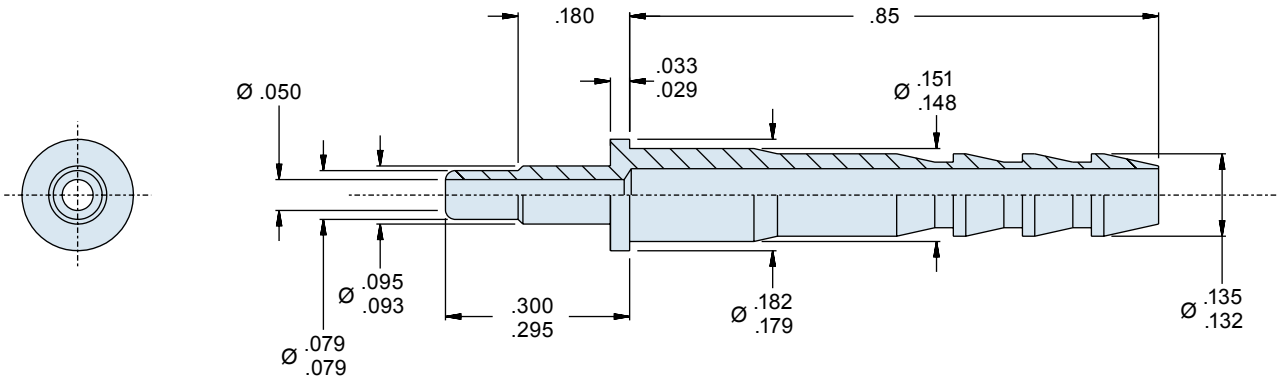

Stainless steel pneumatic contacts attach to 3/32 inch (2.38) diameter tubing. Contacts snap into size #12 connector cavities. These pneumatic contacts are rated for 200 PSI maximum air pressure. No installation tool is required. Remove contacts with plastic extraction tool 809-132.

Material and Finish

Body and Cap: stainless steel, passivated
O-ring: fluorosilicone
Washers: PTFE

Specifications

Contact may be used for air pressures up to 200±10% PSIG
Fits #12 socket contact cavities in Series 79 connectors

Notes

High pressure pneumatic contacts available. Consult factory for more information.

© 2011 Glenair, Inc.

850-010
M39029/58 Type
PCB Pin Contact for D38999/20 and /24

PCB Pin Contact to Fit MIL-DTL-38999/20 and /24 Connectors



Mating End Size	Glenair Part Number
22	850-010-22
20	850-010-20
16	850-010-16
12	850-010-12

TABLE I

Size	Ø A	Ø B	Ø C	Ø D
22	.0305 .0295	.062 .060	.046 .044	.020 .018
20	.041 .039	.094 .091	.070 .068	.028 .024
16	.0635 .0615	.130 .127	.101 .097	.0635 .0615
12	.095 .093	.182 .179	.134 .130	.095 .093

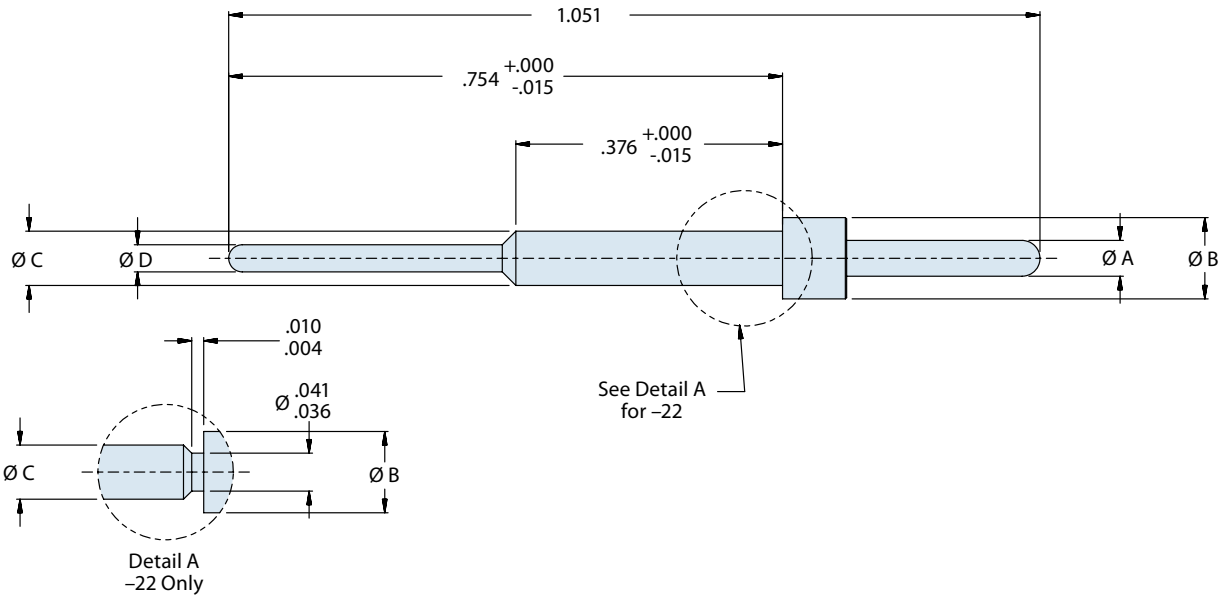

Material and Finish

Copper alloy, plated with 50 microinches gold per ASTM B488 Type II code C over 50–100 micro inches nickel IAW SAE AMS-QQ-N-290, class II

© 2011 Glenair, Inc.

PCB Socket Contact to Fit MIL-DTL-38999/20 and /24 Connectors



Mating End Size	Glenair Part Number
22	850-011-22
20	850-011-20
16	850-011-16
12	850-011-12

TABLE I

Size	Ø A Max	Ø B	Ø C	Ø D
22	.062	.062 .060	.046 .044	.020 .018
20	.078	.094 .091	.070 .068	.028 .024
16	.113	.130 .127	.101 .097	.0635 .0615
12	.161	.182 .179	.134 .130	.095 .093

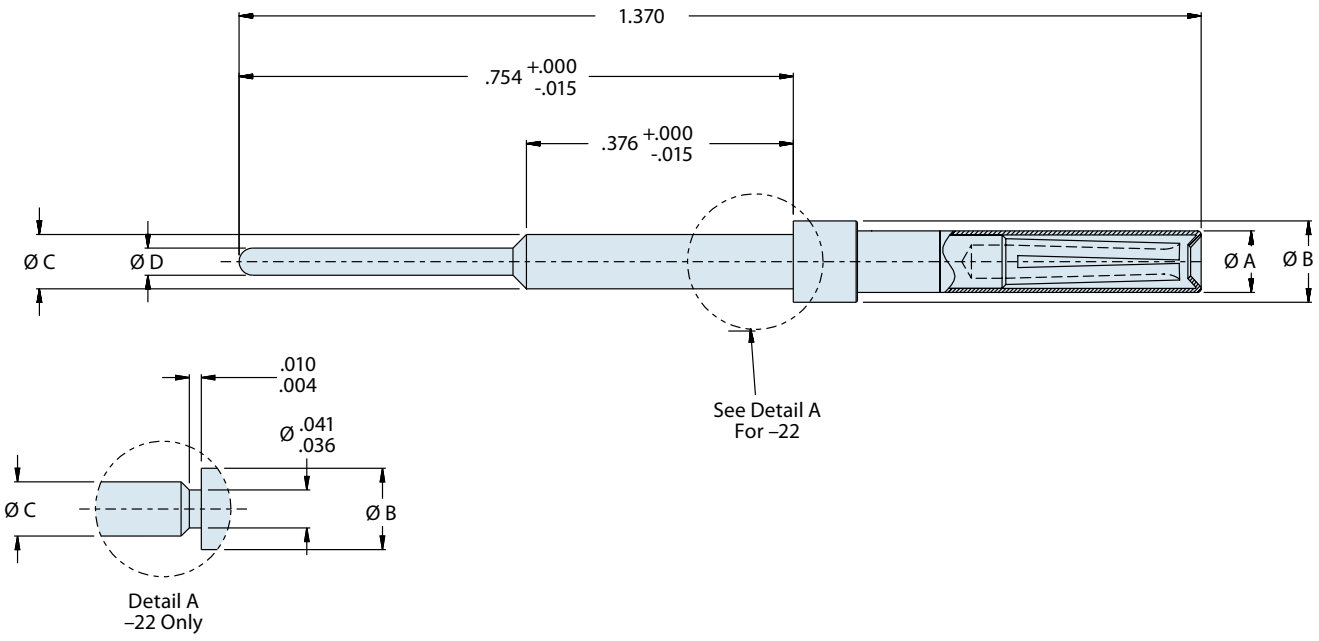

Material and Finish

Copper alloy, plated with 50 microinches gold per ASTM B488 Type II code C over 50–100 microinches nickel IAW SAE AMS-QQ-N-290, class II

D

© 2011 Glenair, Inc.

Glenair®

850-013
Size 8 Socket Contact
High Power

#8 High Power Socket Contact



Mating End Size	Wire Accommodation	Glenair Part Number
8	8 AWG	850-013

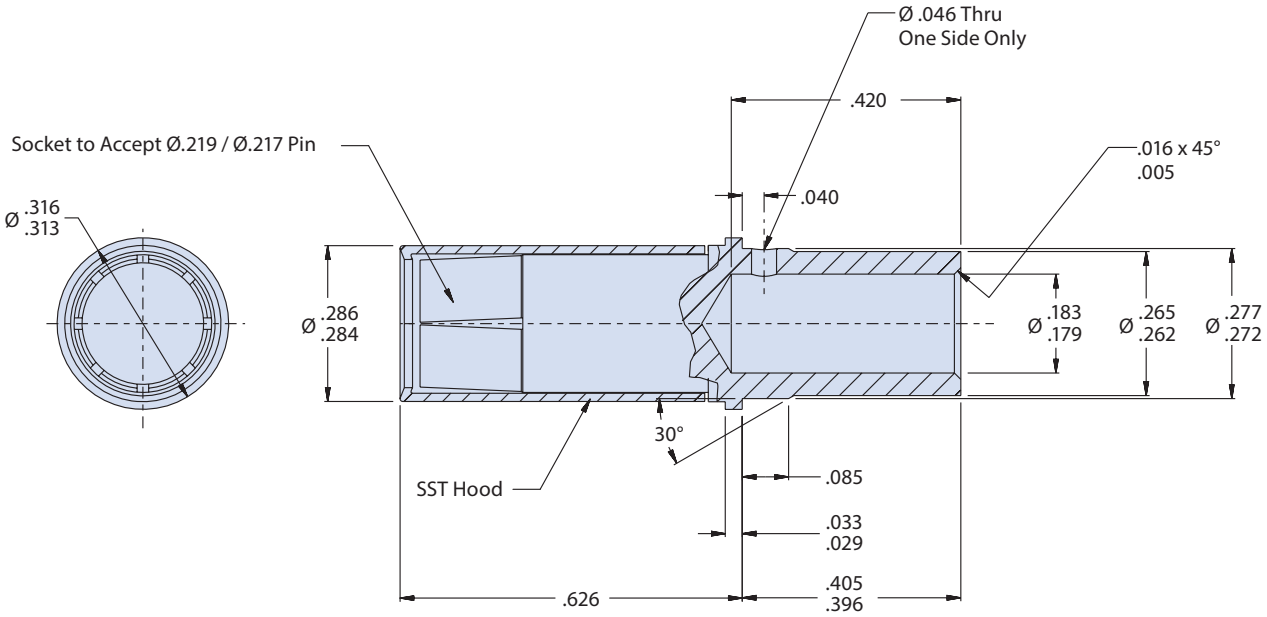

D

Material and Finish

Contact Body: Copper alloy, plated with 50 microinches gold per ASTM B488 Type II code C over 50–100 microinches nickel IAW SAE AMS-QQ-N-290, class II
Hood: CRES, passivated

Crimp Tools and Insertion/Extraction Tools

Crimp Tool: 859-025 (M22520/23-01)
Crimp Die: 859-026 (M22520/23-02)
Locator: 859-046 (Daniels WA23-395L)
or Spring Locator (recommended): 859-164 (Daniels WA23-395SLL)
Consult factory for cable accommodation and respective tool compatibility.

Notes

For use with MM, SuperNine (233-217 and 233-218).

© 2011 Glenair, Inc.

#8 High Power Pin Contact



Mating End Size	Wire Accommodations	Glenair Part Number
8	8 AWG	850-014

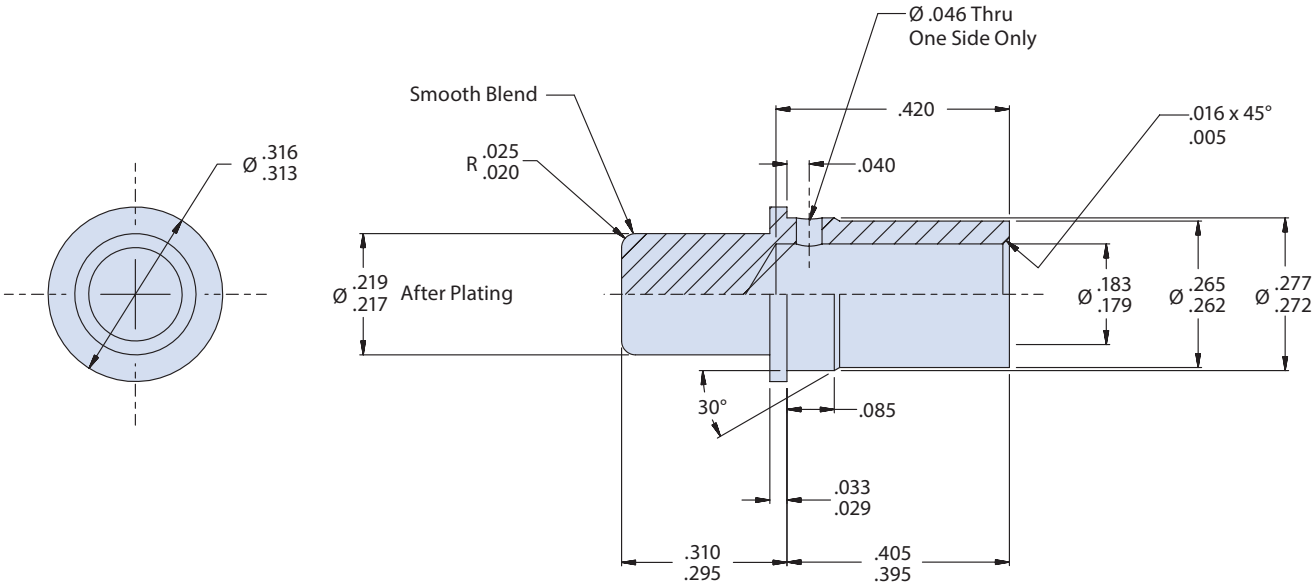

Material and Finish

Contact Body: Copper alloy, plated with 50 microinches gold per ASTM B488 Type II code C over 50–100 microinches nickel IAW SAE AMS-QQ-N-290, class II

Crimp Tools and Insertion/Extraction Tools

Crimp Tool: 859-025 (M22520/23-01)
Crimp Die: 859-026 (M22520/23-02)
Locator: 859-046 (Daniels WA23-395L)
or Spring Locator (recommended): 859-164 (Daniels WA23-395SLL)
Consult factory for cable accommodation and respective tool compatibility.

Notes

For use with MM, SuperNine (233-217 and 233-218).

© 2011 Glenair, Inc.

850-015
M39029/56 Type
Socket Contact With Solder Cup

Socket Contact with Solder Cup For D38999 Series I, III and IV Connectors



Mating End Size	Glenair Part Number
22	850-015-22
20	850-015-20
16	850-015-16
12	850-015-12
10	850-015-10

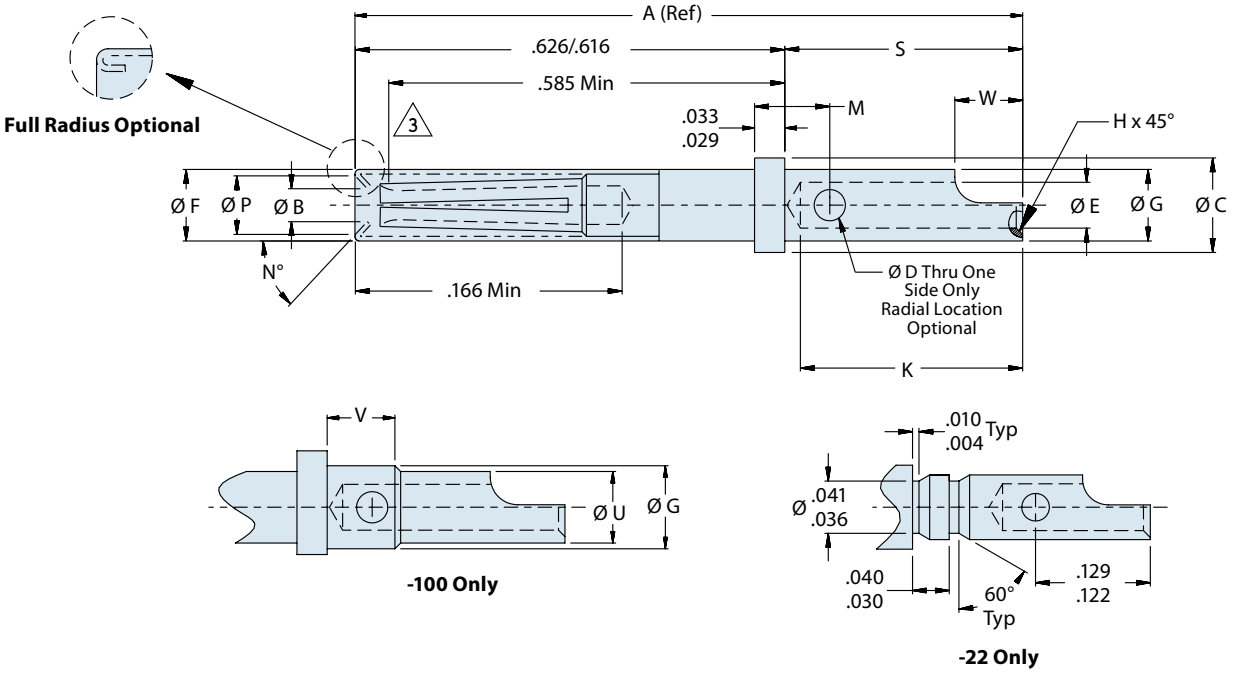

Material and Finish

Contact Body: Copper alloy, plated with 50 microinches gold per ASTM B488 Type II code C over 50–100 microinches nickel IAW SAE AMS-QQ-N-290, class II
Hood: 305 CRES, passivated

© 2011 Glenair, Inc.

TABLE I: CONNECTOR DIMENSIONS									
Size	Part Number	A Ref	Ø B Min	Ø C	Ø D	Ø E	Ø F Max	Ø G	Ø H
22	850-015-22	.855	.031	.062 .060	.022 .018	.036 .034	.062	.048 .046	.005 .003
20	850-015-20	.855	.0415	.094 .091	.032 .026	.048 .042	.078	.070 .068	.010 .005
16	850-015-16	.855	.064	.130 .127	.042 .036	.080 .070	.113	.103 .101	.010 .005
12	850-015-12	.855	.0955	.182 .179	.042 .036	.120 .112	.161	.151 .148	.016 .005
10	850-015-10	1.021	.1265	.242 .238	.052 .046	.146 .138	.215	.213 .207	.016 .005

TABLE I: (Continued) CONNECTOR DIMENSIONS									
Size	Part Number	K	M	N°	Ø P Min	S	Ø U	V	W
22	850-015-22	.160 .130	—	50° 44°	.047	.237 .231	—	—	.080 .050
20	850-015-20	.230 .200	.078 .072	47° 40°	.053	.237 .231	—	—	.105 .075
16	850-015-16	.230 .200	.088 .082	47° 40°	.084	.237 .231	—	—	.105 .075
12	850-015-12	.230 .200	.088 .082	47° 40°	.118	.237 .231	—	—	.115 .085
10	850-015-10	.385 .355	.115 .108	Full Radius	.146	.405 .395	.183 .177	.121 .111	.140 .110

© 2011 Glenair, Inc.

850-016
M39029/58 Type
Pin Contact With Solder Cup

Pin Contact with Solder Cup for D38999 Series I, III and IV Connectors



Mating End Size	Glenair Part Number
22	850-016-22
20	850-016-20
16	850-016-16
12	850-016-12
10	850-016-10

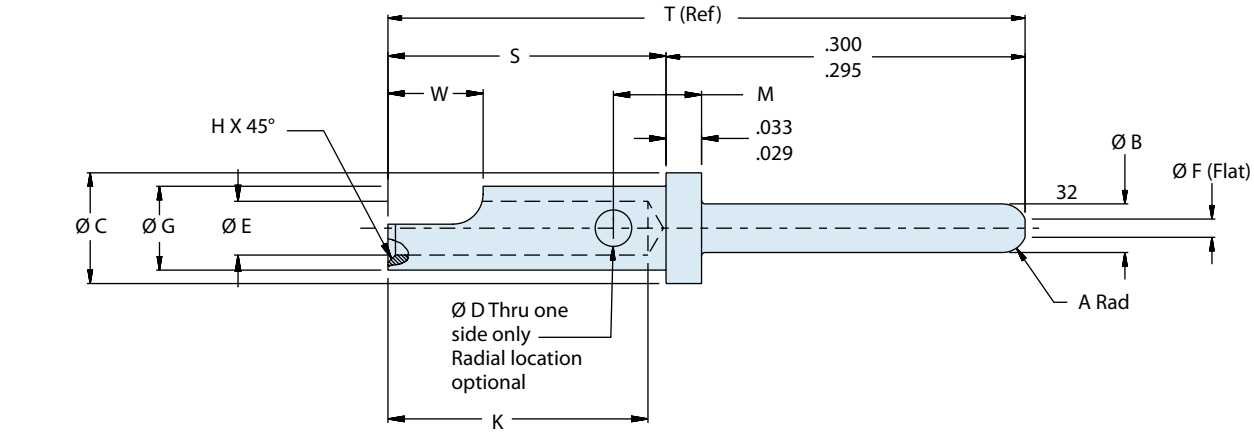

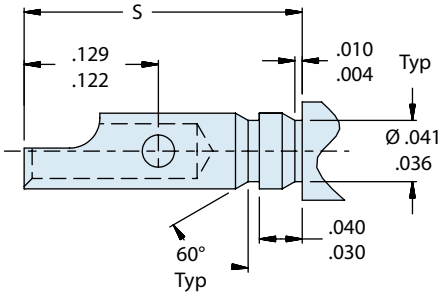

-22 ONLY

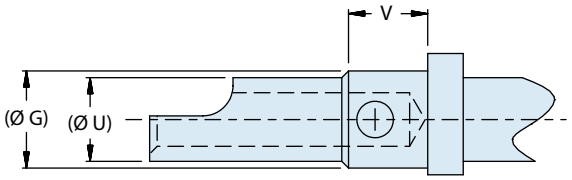

-10 ONLY

Material and Finish

Contact Body: Copper alloy, plated with 50 microinches gold per ASTM B488 Type II code C over 50–100 microinches nickel IAW SAE AMS-QQ-N-290, class II

© 2011 Glenair, Inc.

TABLE I: CONNECTOR DIMENSIONS									
Size	Part Number	A Rad	Ø B	Ø C	Ø D	Ø E	Ø F	Ø G	H
22	850-016-22	.020 .010	.0305 .0295	.062 .060	.022 .018	.036 .034	.011 max	.048 .046	.005 .003
20	850-016-20	.025 .020	.041 .039	.094 .091	.032 .026	.048 .042	.015 max	.070 .068	.010 .005
16	850-016-16	.025 .020	.0635 .0616	.130 .127	.042 .036	.080 .070	.030 .011	.103 .101	.010 .005
12	850-016-12	.025 .020	.095 .093	.182 .179	.042 .036	.120 .112	.062 .043	.151 .148	.016 .005
10	850-016-10	.025 .020	.126 .124	.242 .238	.052 .046	.146 .138	.094 .074	.213 .207	.016 .005

TABLE I: (Continued) CONNECTOR DIMENSIONS								
Size	Part Number	K	M	S	T (Ref)	Ø U	V	W
22	850-016-22	.160 .130	—	.237 .231	.531	—	—	.080 .050
20	850-016-20	.230 .200	.078 .072	.237 .231	.531	—	—	.105 .075
16	850-016-16	.230 .200	.088 .082	.237 .231	.531	—	—	.105 .075
12	850-016-12	.230 .200	.088 .082	.237 .231	.531	—	—	.115 .085
10	850-016-10	.385 .355	.115 .108	.405 .395	.698	.183 .177	.121 .111	.140 .110

© 2011 Glenair, Inc.

850-017
M39029/58 Type
Pin Contact With Extended Rear Solder Cup

Pin Contact with Extended Rear Solder Cup



Mating End Size	Military Part Number	Glenair Part Number
22	N/A	850-017-22
20	N/A	850-017-20
16	N/A	850-017-16
12	N/A	850-017-12

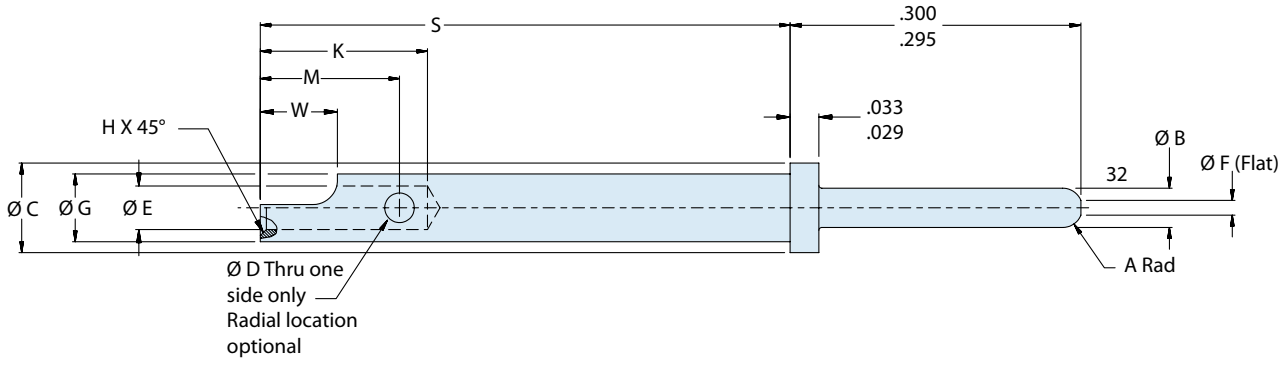

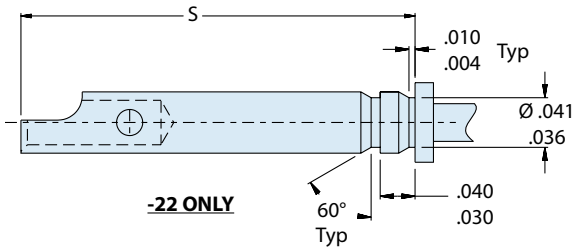

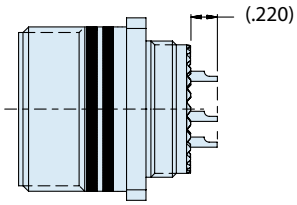

Ref. Solder cup length
connector shown for ref only

© 2011 Glenair, Inc.

TABLE I: CONNECTOR DIMENSIONS													
Size	Part Number	A Rad	Ø B	Ø C	Ø D	Ø E	Ø F	Ø G	H	K	M	S	W
22	850-017-22	.020 .010	.0305 .0295	.062 .060	.022 .018	.036 .034	.011 max	.048 .046	.005 .003	.160 .130	.125	.780	.080 .050
20	850-017-20	.025 .020	.041 .039	.094 .091	.032 .026	.048 .042	.015 max	.070 .068	.010 .005	.230 .200	.185	.780	.105 .075
16	850-017-16	.025 .020	.0635 .0616	.130 .127	.042 .036	.080 .070	.030 .011	.103 .101	.010 .005	.230 .200	.180	.780	.105 .075
12	850-017-12	.025 .020	.095 .093	.182 .179	.042 .036	.120 .112	.062 .043	.151 .148	.016 .005	.230 .200	.180	.780	.115 .085

D

Material and Finish

Contact Body: Copper alloy, plated with 50 microinches gold per ASTM B488 Type II code C over 50–100 microinches nickel IAW SAE AMS-QQ-N-290, class II

© 2011 Glenair, Inc.

850-018-22
M39029/56-348 Type
Size 22 Socket Contact with Expanded Wire Accommodation



Mating End Size	Glenair Part Number
22	850-018-22

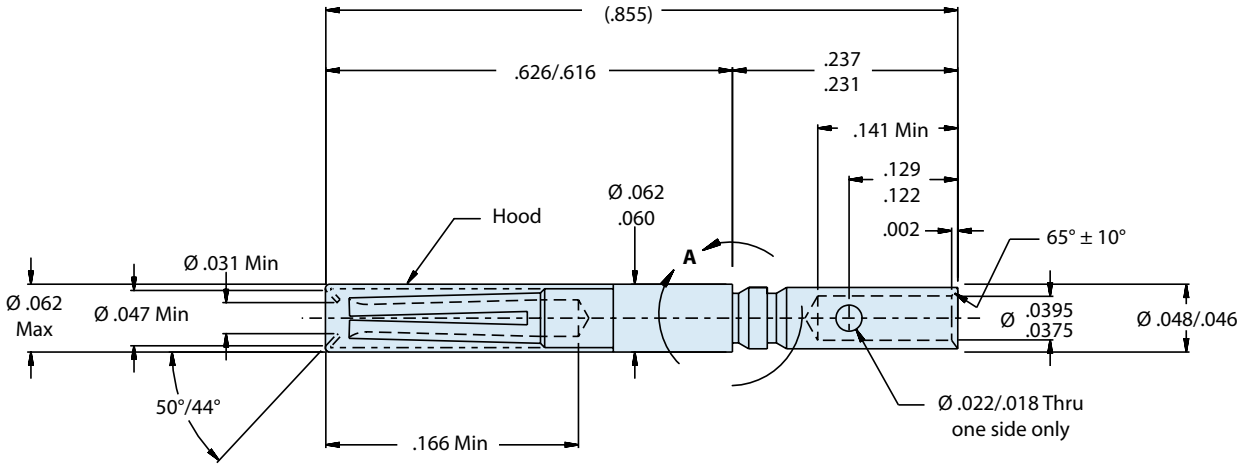

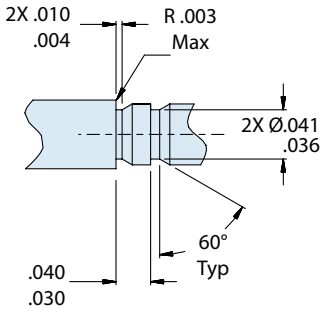

DETAIL A

Material and Finish
Contact Body: Copper alloy, plated with 50 microinches gold per ASTM B488 Type II code C over 50–100 microinches nickel IAW SAE AMS-QQ-N-290, class II
Hood: 305 CRES, passivated

Notes
May be used with up to 20AWG wire

© 2011 Glenair, Inc.

850-019-22
M39029/58-360 Type
Size 22 Pin Contact with Expanded Wire Accommodation



Mating End Size	Glenair Part Number
22	850-019-22

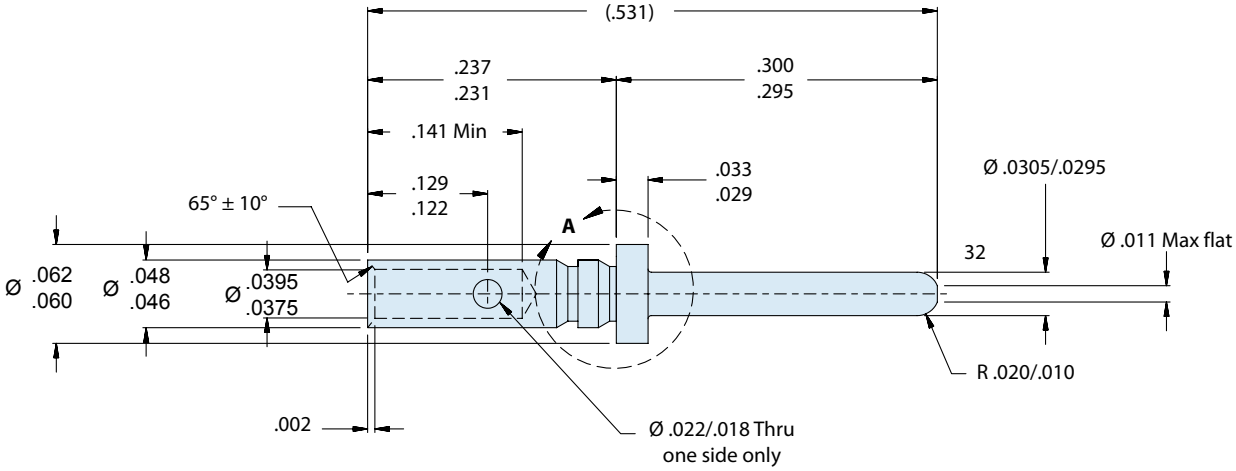

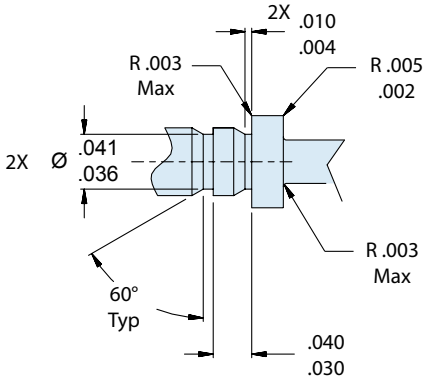

DETAIL A

Material and Finish

Contact Body: Copper alloy, plated with 50 microinches gold per ASTM B488 Type II code C over 50–100 microinches nickel IAW SAE AMS-QQ-N-290, class II

Notes

May be used with up to 20AWG wire

© 2011 Glenair, Inc.

857-217-22-30
M39029/58-360 Type Size 22 Pin Contact with size 30 crimp barrel accommodation



HOW TO ORDER			
Sample Part No.	**857-217**	**-22**	**-30**
Product	**857-217-22-30** = Pin Contact		
Contact Size	**22**		
Wire Size, AWG	**30**		

857-217-22-30 - DIMENSIONS

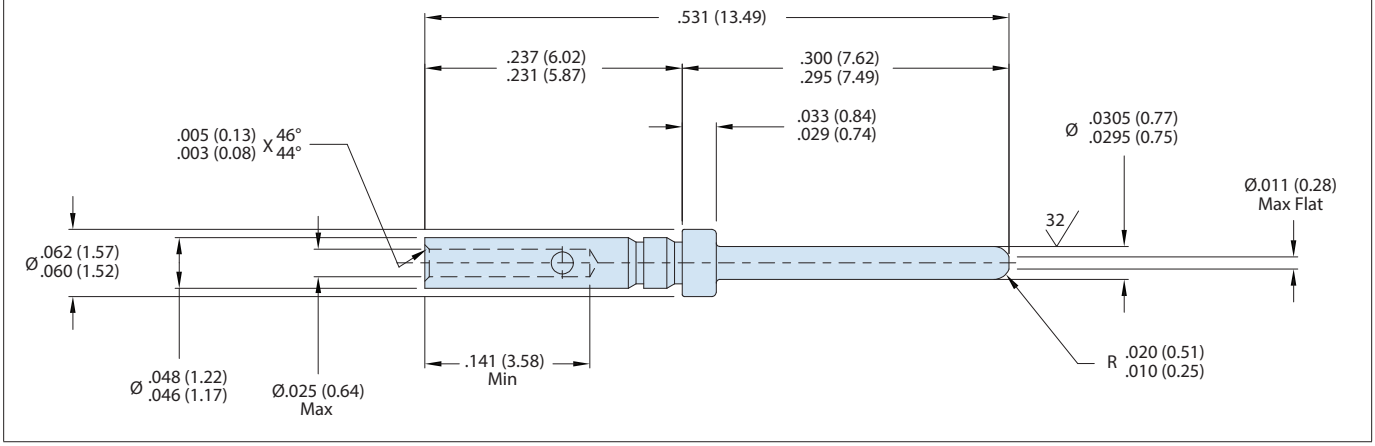

TABLE I - CRIMP TOOL SELECTOR			
Wire	26	28	30
Selector	5	4	3

MATERIAL / FINISH

- Copper alloy / gold plated per ASTM B 488, Type II, Code C, .000050 min thick over nickel per SAE AMS-QQ-N-290, Class 2, .000030 to .000150 thick.

NOTES

- Crimp tool data:
  A) Crimp Frame - M22520/2-01 (Glenair p/n 809-015)
  B) Positioner - M22520/2-09 (Glenair p/n 859-018)
  C) Crimp tool selector: See Table I
  D) Insertion/extraction tool - M81969/14-01 (Glenair p/n 859-020)
- Contact barrel accommodates 26 to 30 AWG

© 2025 Glenair, Inc • 1211 Air Way, Glendale, CA 91201 • 818-247-6000 • www.glenair.com • U.S. CAGE code 06324 •
AS39029 · Dimensions in Inches (millimeters) are subject to change without notice.

857-218-22-30
M39029/58-360 Type Size 22 Socket Contact with size 30 crimp barrel accommodation



HOW TO ORDER			
Sample Part No.	**857-218**	**-22**	**-30**
Product	**857-218-22-30** = Socket Contact		
Contact Size	**22**		
Wire Size, AWG	**30**		

857-218-22-30 - DIMENSIONS

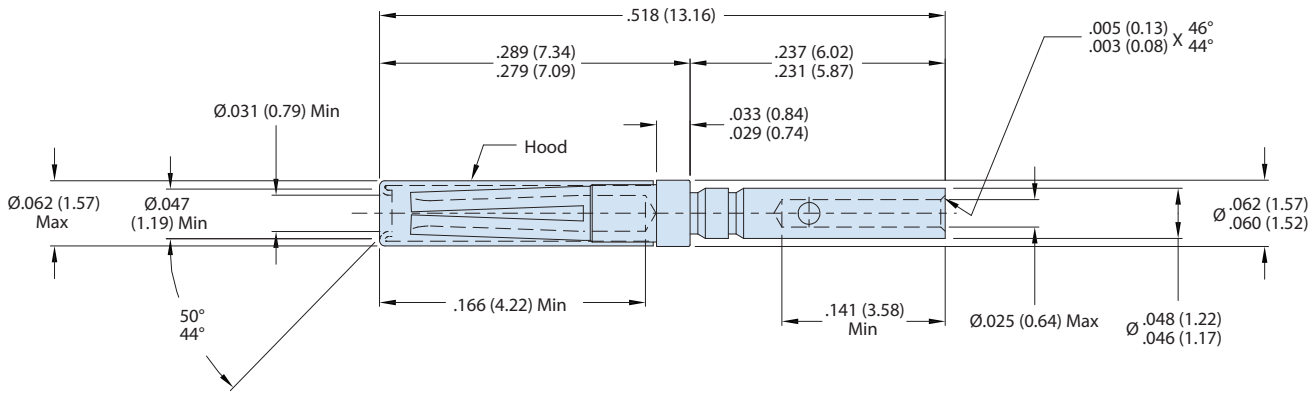

TABLE I - CRIMP TOOL SELECTOR			
Wire	26	28	30
Selector	5	4	3

MATERIAL / FINISH

- Contact body - copper alloy / gold plated per ASTM B 488, Type II, Code C, .000050 min thick over nickel per SAE AMS-QQ-N-290, Class 2, .000030 to .000150 thick.
- Hood - 305 CRES, passivated

NOTES

- Crimp tool data:
  A) Crimp Frame - M22520/2-01 (Glenair p/n 809-015);
  B) Positioner - M22520/2-09 (Glenair p/n 859-018)
  C) Crimp tool selector: See Table I
  D) Insertion/extraction tool - M81969/14-01 (Glenair p/n 859-020)
- Contact barrel accomodates 26 to 30 AWG

© 2025 Glenair, Inc • 1211 Air Way, Glendale, CA 91201 • 818-247-6000 • www.glenair.com • U.S. CAGE code 06324 •
AS39029 · Dimensions in Inches (millimeters) are subject to change without notice.

850-020-22
M39029/57 Type
Socket Contact with Expanded Wire Accommodation



Mating End Size	Glenair Part Number
22	850-020-22

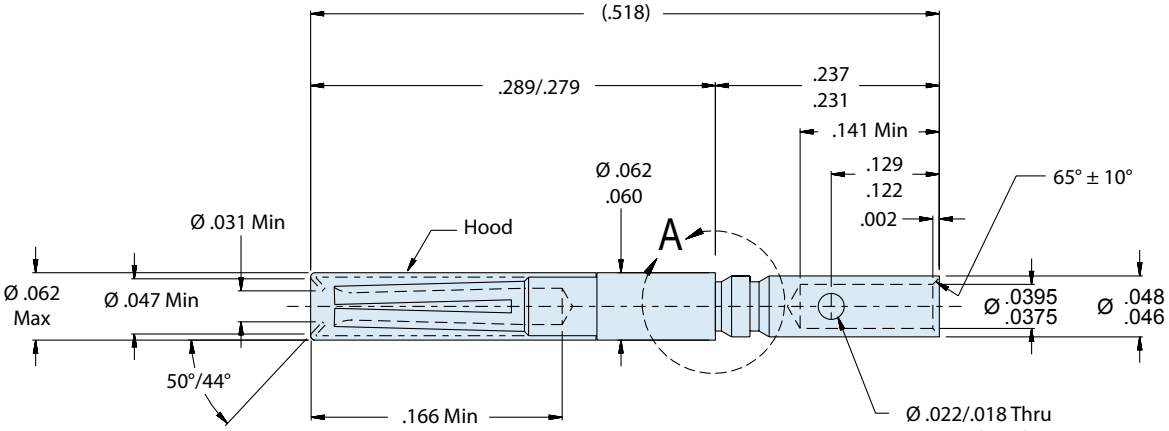

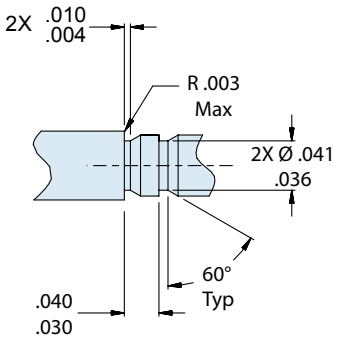

DETAIL A

Material and Finish
Contact Body: Copper alloy, plated with 50 microinches gold per ASTM B488 Type II code C over 50–100 microinches nickel IAW SAE AMS-QQ-N-290, class II
Hood: 305 CRES, passivated

Notes
May be used with up to 20AWG wire

© 2011 Glenair, Inc.

850-334-20-22
M39029/58-363 Type
Size 20 Pin Contact with Size 22 Crimp Barrel

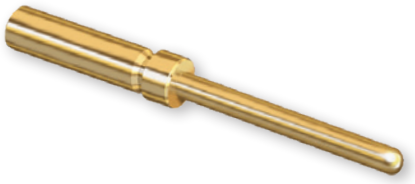

Mating End Size	Glenair Part Number	Wire Size
20	850-334-20	-22

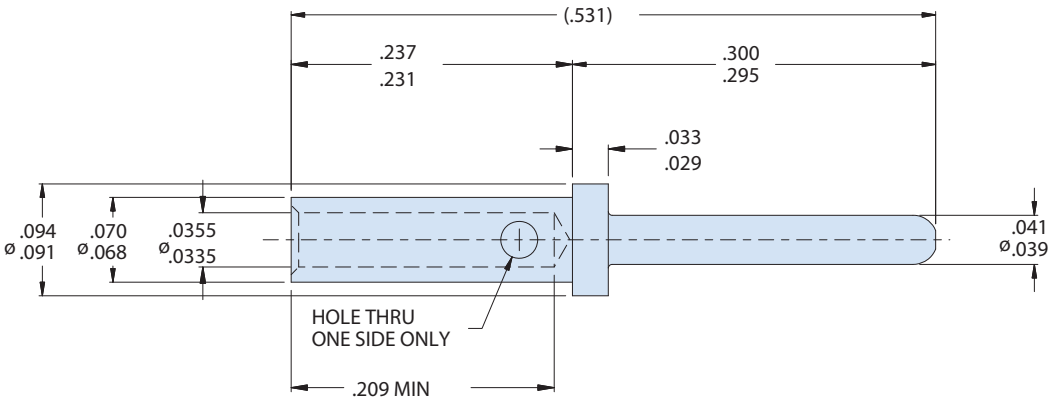

Material and Finish
Contact Body: Copper alloy / gold plated IAW ASTM B 488, Type II, code C, .000050 Min thick, over nickel IAW SAE AMS-QQ-N-290, Class 2, .000030 to .000150 thick.

Crimp Tooling Data
Basic Crimptool: M22520/2-01
Positioner: M22520/2-10

Notes
Contacts shall meet or exceed the applicable requirements specified in AS39029/58-363 except for 22AWG-28AWG crimp barrel.

© 2011 Glenair, Inc.

850-335-20-22
M39029/57-357 Type
Size 20 Socket Contact with Size 22 Crimp Barrel

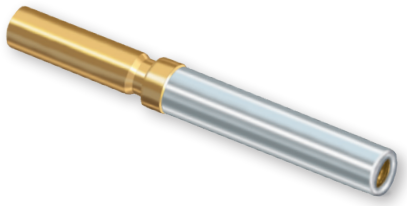

Mating End Size	Glenair Part Number	Wire Size
20	850-335-20	-22

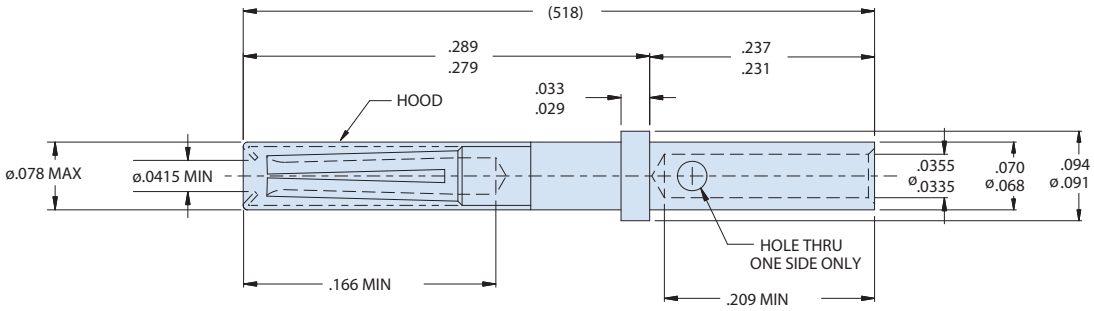

D

Material and Finish
Contact body: Copper alloy / gold plated IAW ASTM B 488, Type II, code C, .000050 Min thick, over nickel IAW SAE AMS-QQ-N-290, class 2, .00003 to .00015 thick.
Hood: 305 cres, passivated

Crimp Tooling Data
Basic Crimptool: M22520/2-01
Positioner: M2252/2-10

Notes
These contacts shall meet or exceed the applicable requirements specified in AS39029/57-357 except for 22AWG-28AWG crimp barrel.

© 2011 Glenair, Inc.

850-336-20-22
M39029/56-351 Type
Size 20 Socket Contact with Size 22 Crimp Barrel

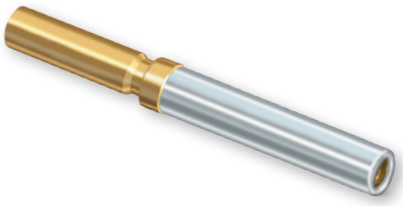

Mating End Size	Glenair Part Number	Wire Size
20	850-336-20	-22

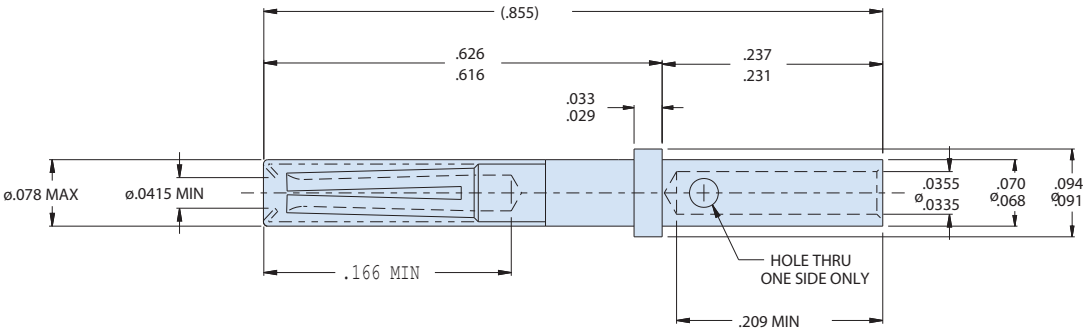

D

Material and Finish
Contact body: Copper alloy / gold plated IAW ASTM B 488, Type II, code C, .000050 Min thick, over nickel IAW SAE AMS-QQ-N-290, class 2, .000030 to .000150 thick.
Hood: 305 cres, passivated

Crimp Tooling Data
Basic crimp tool: M22520/2-01
Positioner: M22520/2-10

Notes
These contacts shall meet or exceed the applicable requirements specified in AS39029/56-351 except for 22AWG-28AWG crimp barrel.

© 2011 Glenair, Inc.

857-027
M39029/58 Type
8 Gauge Pin Contact with PC Tails



Mating End Size	PC Tail Length (A Dim.)	Overall Length (B Ref)	Glenair Part Number
8	.150 (3.8)	1.400 (35.6)	857-027-08-1
	.225 (5.7)	1.475 (37.5)	857-027-08-2
	.325 (8.3)	1.575 (40.0)	857-027-08-3

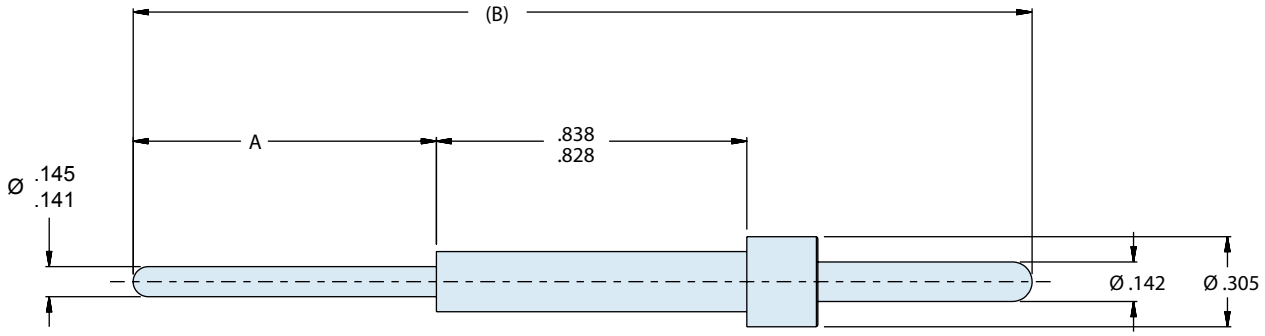

Material and Finish

Contact Body: Copper alloy, plated with 50 microinches gold per ASTM B488 Type II code C over 50–100 microinches nickel IAW SAE AMS-QQ-N-290

Notes

This contact is designed IAW M39029/58 and is for use in special MIL-DTL-38999 Series III rear release contact retention systems using 8 gauge power contacts.
Shoulder on PC tail to protrude .030 (nominally) past the grommet seal or end of connector (jam nut type).

© 2011 Glenair, Inc.

857-028
M39029/56 Type
8 Gauge Socket Contact with PC Tails



Mating End Size	PC Tail Length (A Dim.)	Overall Length (B Ref)	Glenair Part Number
8	.150 (3.8)	1.773 (45.0)	857-028-08-1
	.225 (5.7)	1.848 (46.9)	857-028-08-2
	.325 (8.3)	1.948 (49.5)	857-028-08-3

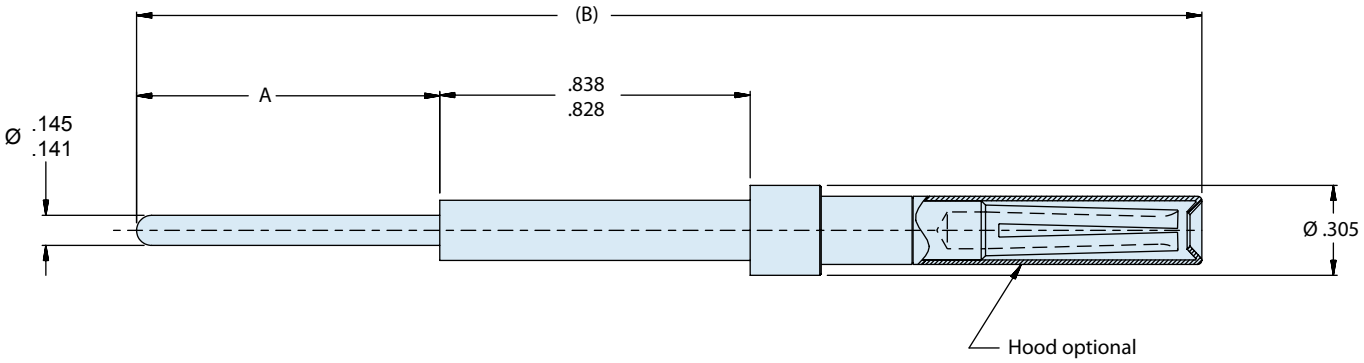

D

Material and Finish

Contact Body: Copper alloy, plated with 50 microinches gold per ASTM B488 Type II code C over 50–100 microinches nickel IAW SAE AMS-QQ-N-290

Notes

This contact is designed IAW M39029/56 and is for use in special MIL-DTL-38999 Series III rear release contact retention systems using 8 gauge power contacts.
Shoulder on PC tail to protrude .030 (nominally) past the grommet seal or end of connector (jam nut type).

© 2011 Glenair, Inc.

687-348
Wire to Contact Adapter

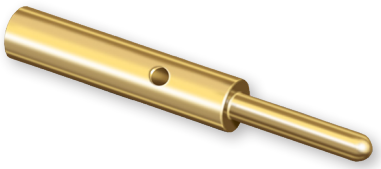

HOW TO ORDER					
Sample Part Number			**687-348**	**Z2**	**-20**	**-16**
Basic Part Number	Wire to Contact Adapter					
Finish Symbols	**Z2** = Gold Plate	**Z3** = Silver Plate	**Z4** = Tin Plate			
Contact Wire Barrel Size	**4**, **8**, **10**, **12**, **16**, **20**, & **22**					
Wire Range	**0** = 0-4 AWG **12** = 12-14 AWG **22** = 22-24 AWG	**6** = 6-8 AWG **16** = 16-18 AWG **26** = 26-30 AWG	**10** = 8-10 AWG **20** = 20-22 AWG			

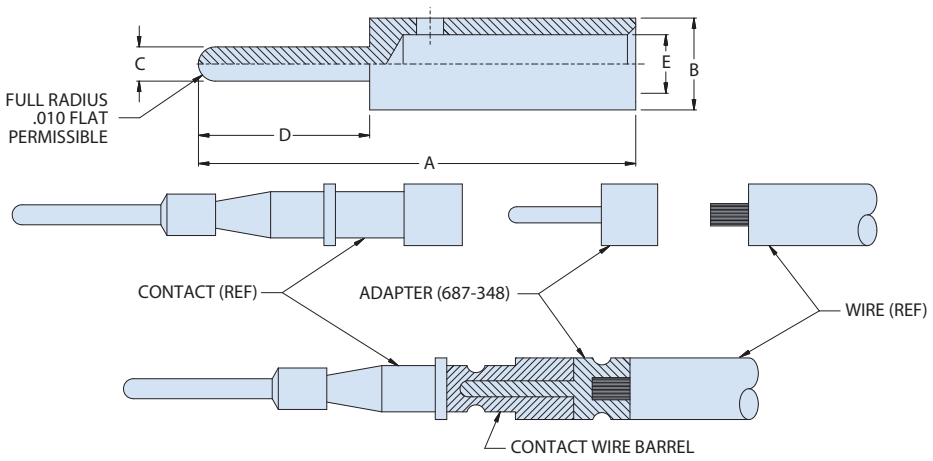

Material and Finish

Tellurium copper alloy (#1452)/see part no development crimpable or equivalent

Notes

Wire must be crimped or soldered to adapter prior to crimping or soldering electrical contact to adapter. For dimensional data, please consult factory.

Outside diameter may exceed contact crimp-pot diameter, and is therefore not recommended for use in rear release contact style connectors.

© 2011 Glenair, Inc.

Glenair®

687-348
Wire to Contact Adapter

TABLE									
Part Number	Wire Range	A Max	B Dia Max	C Dia ±.003	D	E ±.004	Rec. Crimp Tool[3]	Rec. Positioner[3]	Rec. Die Assembly
687-348-12-10**	8-10	1.010 (25.65)	0.275 (6.99)	0.094 (2.39)	0.448 (11.38)	0.160 (4.06)	WA23	WA23-9	WA23-2[1]
687-348-16-12**	12-14	0.640 (16.26)	0.156 (3.96)	0.062 (1.57)	0.300 (7.62)	0.100 (2.54)	AF8	TH653 (YELLOW)	N/A
687-348-16-20[4]**	20-22	0.562 (14.27)	0.062 (1.57)	0.062 (1.57)	N/A	0.044 (1.12)	AF8	TP1415	N/A[1]
687-348-20-12**	12-14	0.530 (13.46)	0.156 (3.96)	0.038 (0.97)	0.200 (5.08)	0.100 (2.54)	AF8	TH653 (YELLOW)	N/A
687-348-20-16**	16-18	0.485 (12.32)	0.102 (2.59)	0.038 (0.97)	0.190 (4.83)	0.065 (1.65)	AF8	TH653 (BLUE)	N/A
687-348-22-20**	20-22	0.430 (10.92)	0.059 (1.50)	0.029 (0.74)	0.160 (4.06)	0.044 (1.12)	AF8	TH653 (RED)	N/A[1]
687-348-4-0**	0-4	1.500 (38.10)	0.568 (14.43)	0.312 (7.92)	0.600 (15.24)	0.454 (11.53)	WA23	WA23-13	WA23-5[1]
687-348-12-6**	6-8	0.723 (18.36)	0.300 (7.62)	0.094 (2.39)	0.335 (8.51)	0.238 (6.05)	WA23	859-193[2]	WA23-284DA[1]
687-348-8-6**	6-8	0.763 (19.38)	0.300 (7.62)	0.142 (3.61)	0.375 (9.52)	0.238 (6.05)	WA23	859-193[2]	WA23-284DA[1]
687-348-8-6C**	6-8	0.938 (23.83)	0.300 (7.62)	0.142 (3.61)	0.550 (13.97)	0.238 (6.05)	WA23	859-193[2]	WA23-284DA[1]
687-348-8-12[4]**	12-14	0.715 (18.16)	0.156 (3.96)	0.142 (3.61)	0.375 (9.52)	0.100 (2.54)	AF8	TP1712	N/A
687-348-22-16**	16-18	0.455 (11.56)	0.102 (2.59)	0.029 (0.74)	0.160 (4.06)	0.065 (1.65)	AF8	TH653 (BLUE)	N/A
687-348-12-20[4]**	20-22	0.715 (18.16)	0.094 (2.39)	0.094 (2.39)	N/A	0.044 (1.12)	AF8	TP1713	N/A
687-348-8-10**	8-10	0.938 (23.83)	0.275 (6.99)	0.142 (3.61)	0.375 (9.52)	0.160 (4.06)	WA23	WA23-9	WA23-2
687-348-12-16[4]**	16-18	0.715 (18.16)	0.094 (2.39)	0.094 (2.39)	N/A	0.065 (1.65)	AF8	TP1713	N/A
687-348-24-20**	20-22	0.320 (8.13)	0.070 (1.78)	0.025 (0.64)	0.080 (2.03)	0.044 (1.12)	AFM8	K1569	N/A
687-348-24-22**	22-24	0.320 (8.13)	0.048 (1.22)	0.025 (0.64)	0.080 (2.03)	0.034 (0.86)	AFM8	K1570	N/A
687-348-8-0**	0-4	1.350 (34.29)	0.568 (14.43)	0.142 (3.61)	0.448 (11.38)	0.454 (11.53)	TBD	TBD	TBD
687-348-16-10**	8-10	0.862 (21.89)	0.275 (6.99)	0.062 (1.57)	0.300 (7.62)	0.160 (4.06)	WA23	WA23-9	WA23-2
687-348-16-22[4]**	22-24	0.562 (14.27)	0.062 (1.57)	0.062 (1.57)	N/A	0.034 (0.86)	AF8	TP1415	N/A[1]
687-348-20-26[4]**	26-30	0.430 (10.92)	0.056 (1.42)	0.038 (0.97)	0.254 (6.45)	0.024 (0.61)	809-015 (M22520/2-01)[2]	809-005[2]	N/A
687-348-16-26[4]**	26-30	0.430 (10.92)	0.062 (1.57)	0.062 (1.57)	N/A	0.024 (0.61)		809-057[2]	N/A[1]
687-348-8-16[4]**	16-18	0.715 (18.16)	0.156 (3.96)	0.142 (3.61)	0.375 (9.52)	0.065 (1.65)	AF8	TP1712	N/A
687-348-8-20[4]**	20-22	0.715 (18.16)	0.156 (3.96)	0.142 (3.61)	0.375 (9.52)	0.044 (1.12)	AF8	TP1712	N/A
687-348-10-8**	8-10	0.735 (18.67)	0.275 (6.99)	0.129 (3.28)	0.335 (8.51)	0.183 (4.65)	WA23	859-193[2]	WA23-2

[1]May be soldered.
[2]Daniels MFR Corp. part numbers. Except where shown.
[3]Glenair part numbers
[4]Alternatively, bushing (wire barrel size reduction) can be used in lieu of the above adapters where noted, as deemed appropriate. The bushing may offer a better solution. See bushing dwg 859-015 and 259-021.

© 2011 Glenair, Inc.

Thermocouple Wire Barrel Reducer Bushing

859-172 Wire Barrel Size Reducer Bushing for M39029/87, M39029/88 & M39029/89

HOW TO ORDER

Sample Part Number	859-172	A	-22	-30	- Z2

Basic Part Number	Wire Barrel Size Reducer Bushing for M39029/87, M39029/88 & M39029/89
Material Code	**A** = Alumel **C** = Chromel **JP** = Iron **JN** = Constantan
"From" Contact	Wire Barrel Size
"To" Wire	Wire Gage Size
Available Finish	**Z2** = Gold Plate (Omit For None)

MATERIAL AND FINISH

(See part number development)

- For Z2 plating: bushing shall be gold plated per ASTM B 488, Type II, Code C, .000050 minimum thick over nickel plate per AMS-QQ-N-290

NOTES

- Bushing must be installed into contact before crimping.
- Bushings are designed to reduce the barrel size of M39029/87, M39029/88 and M39029/89 thermocouple contacts to accommodate smaller wire size.
- For proper environmental sealing of the grommet, use of a shrink sleeve or potting may be required.
- Unless otherwise specified, use the same crimp selector number as intended for barrel wire size without bushing. For example: 859-172x-22-30, use the same selector as it is for 22 AWG wire size. User should verify crimpability on specific wire size/type.

DIMENSIONS

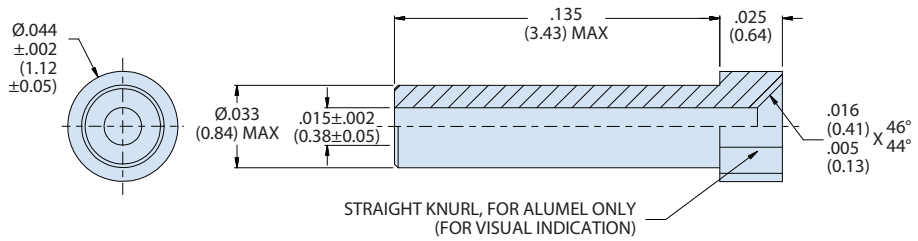

Part Number	Ø A	Ø B Max	C Max	Ø D	E	Refernece To Use With:
859-172*-22-30-**	.017-.013 (0.43-0.33)	0.033 (0.84)	0.135 (3.43)	.048/.042 (1.22/ 1.07)	.030/.020 (0.76/ 0.51)	FOR M39029/87, 88 & 89
859-172*-20-30-**		0.045 (1.14)	0.204 (5.18)	.070/.066 (1.78/ 1.68)		
859-172*-20-28-**	.023-.015 (0.58-0.38)					
859-172*-20-26-**	.028-.020 (0.71-0.51)					
859-172*-16-22-**	.038-.030 (0.97-0.76)	0.065 (1.65)		.103/.097 (2.62/ 2.46)		
859-172*-16-24-**	.033-.025 (0.84-0.64)					
859-172*-16-26-**	.028-.020 (0.71-0.51)					
859-172*-16-28-**	.023-.015 (0.58-0.38)					

© 2011 Glenair, Inc.

Glenair®

850-023
AS39029/87 Type
Thermocouple Pin Contact

D38999 Ser. I, II, III, IV

MIL-DTL 24308

Thermocouple Pin Contact to Fit D38999 Series I, II, III and IV and M24308 Connectors

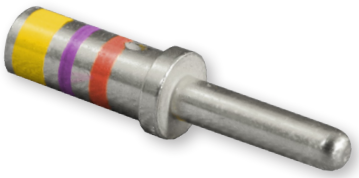

Mating End Size	Wire Accomodation	Military Part Number	Glenair Part Number
22	22-28 AWG	M39029/87-470	850-023-22-470
22	22-28 AWG	M39029/87-471	850-023-22-471
22	22-28 AWG	M39029/87-472	850-023-22-472
22	22-28 AWG	M39029/87-473	850-023-22-473
20	20-24 AWG	M39029/87-474	850-023-20-474
20	20-24 AWG	M39029/87-475	850-023-20-475
20	20-24 AWG	M39029/87-476	850-023-20-476
20	20-24 AWG	M39029/87-477	850-023-20-477
16	16-20 AWG	M39029/87-478	850-023-16-478
16	16-20 AWG	M39029/87-479	850-023-16-479
16	16-20 AWG	M39029/87-480	850-023-16-480
16	16-20 AWG	M39029/87-481	850-023-16-481

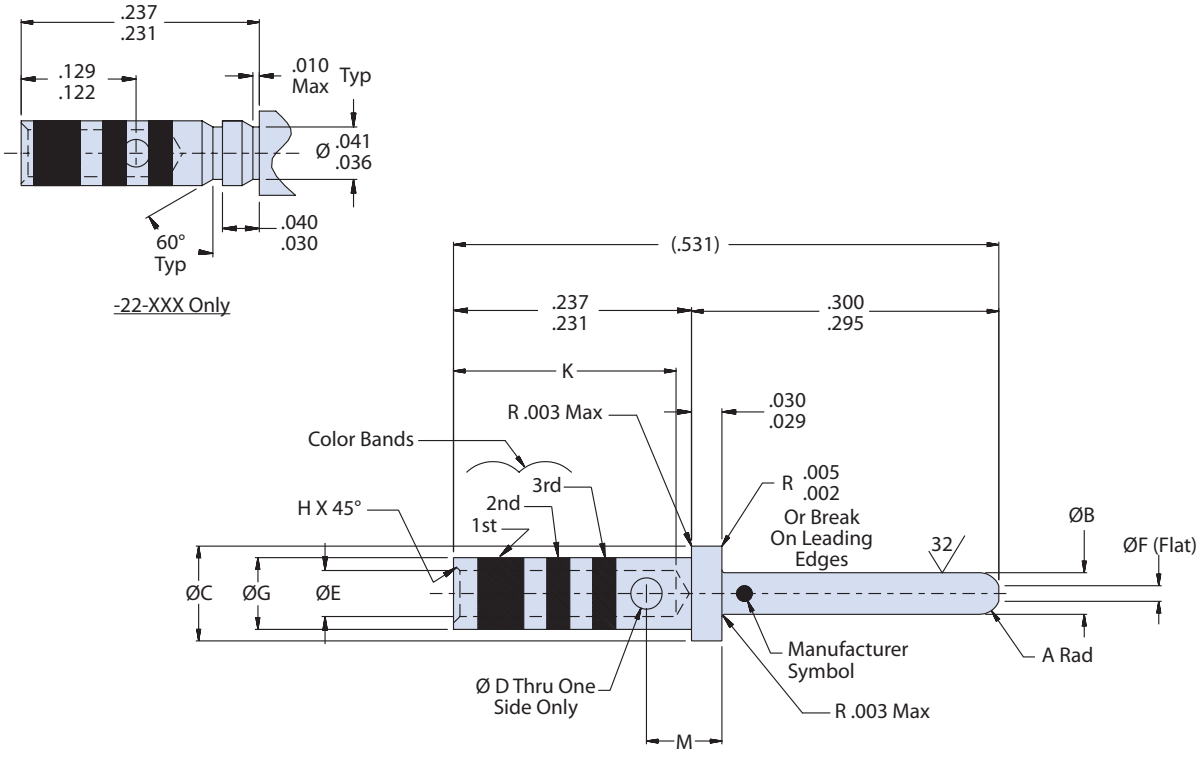

© 2011 Glenair, Inc.

850-023
AS39029/87 Type
Thermocouple Pin Contact

Glenair®

TABLE I: CONTACT DIMENSIONS

Size	Glenair Part Number	Military Number	A (rad)	ø B Min.	ø C	ø D	ø E	ø F	ø G	H
22	850-023-22-470	M39029/87-470	.020 .010	.0305 .0295	.062 .060	.022 .018	.0355 .0335	.011 max	.048 .046	.005 .003
	850-023-22-471	M39029/87-471								
	850-023-22-472	M39029/87-472								
	850-023-22-473	M39029/87-473								
20	850-023-20-474	M39029/87-474	.025 .015	.041 .039	.094 .091	.032 .026	.048 .046	.015 max	.070 .068	.010 .005
	850-023-20-475	M39029/8 7-475								
	850-023-20-476	M39029/87-476								
	850-023-20-477	M39029/87-477								
16	850-023-16-478	M39029/87-478	.025 .020	.0635 .0615	.130 .127	.042 .036	.068 .066	.030 .011	.103 .101	.010 .005
	850-023-16-479	M39029/87-479								
	850-023-16-480	M39029/87-480								
	850-023-16-481	M39029/87-481								

TABLE I (Continued): CONTACT DIMENSIONS

Size	Glenair Part Number	Military Number	K	M	Color Bands			Material	Plating
					1st	2nd	3rd		
22	850-023-22-470	M39029/87-470	.157 .141	–	Yellow	Violet	Black	JN	None
	850-023-22-471	M39029/87-471			Yellow	Violet	Brown	KN	None
	850-023-22-472	M39029/87-472			Yellow	Violet	Red	KP	None
	850-023-22-473	M39029/87-473			Yellow	Violet	Orange	JP	Cadmium Plate*
20	850-023-20-474	M39029/87-474	.229 .209	.078 .072	Yellow	Violet	Yellow	JN	None
	850-023-20-475	M39029/8 7-475			Yellow	Violet	Green	KN	None
	850-023-20-476	M39029/87-476			Yellow	Violet	Blue	KP	None
	850-023-20-477	M39029/87-477			Yellow	Violet	Violet	JP	Cadmium Plate*
16	850-023-16-478	M39029/87-478	.229 .209	.088 .082	Yellow	Violet	Gray	JN	None
	850-023-16-479	M39029/87-479			Yellow	Violet	White	KN	None
	850-023-16-480	M39029/87-480			Yellow	Gray	Black	KP	None
	850-023-16-481	M39029/87-481			Yellow	Gray	Brown	JP	Cadmium Plate*

Per AS39029 spec, the composition designations have been changed as listed below:
JN =Type J negative (formerly constantan)
KN =Type K negative (formerly alumel)
KP =Type K positive (formerly chromel)
JP =Type J positive (formerly iron)

*Chromate Clear Coat.

TABLE II: TOOL COMPATIBILITY

Size	Glenair Part Number	Military Number	AWG Handling	Crimp Tool	Positioner	Insertion Tool	Extraction Tool
22	850-023-22-470	M39029/87-470	22, 24, 26, 28	M22520/2-01 M22520/7-01	M22520/2-09 M22520//7-07	M81969/14-01 M81969/8-01	M81969/14-01 M81969/8-02
	850-023-22-471	M39029/87-471					
	850-023-22-472	M39029/87-472					
	850-023-22-473	M39029/87-473					
20	850-023-20-474	M39029/87-474	20, 22, 24	M22520/7-01 M22520/2-01 M22520/1-01	M22520/7-08 M22520/2-10 M22520/1-04 (Red)	M81969/8-05 M81969/14-02	M81969/8-06 M81969/14-02
	850-023-20-475	M39029/8 7-475					
	850-023-20-476	M39029/87-476					
	850-023-20-477	M39029/87-477					
16	850-023-16-478	M39029/87-478	16, 18, 20	M22520/1-01 M22520/7-01	M22520/1-04 (Blue) M22520/7-04	M81969/8-07 M81969/14-03	M81969/8-08 M81969/14-03
	850-023-16-479	M39029/87-479					
	850-023-16-480	M39029/87-480					
	850-023-16-481	M39029/87-481					

© 2011 Glenair, Inc.

850-024
AS39029/88 Type
Thermocouple Socket Contact

D38999
Ser. I, III, IV

Thermocouple Socket Contact to Fit D38999 Series I, III and IV Connectors



Mating End Size	Wire Accomodation	Military Part Number	Glenair Part Number
22	22-28 AWG	M39029/88-482	850-024-22-482
22	22-28 AWG	M39029/88-483	850-024-22-483
22	22-28 AWG	M39029/88-484	850-024-22-484
22	22-28 AWG	M39029/88-485	850-024-22-485
20	20-24 AWG	M39029/88-486	850-024-20-486
20	20-24 AWG	M39029/88-487	850-024-20-487
20	20-24 AWG	M39029/88-488	850-024-20-488
20	20-24 AWG	M39029/88-489	850-024-20-489
16	16-20 AWG	M39029/88-490	850-024-16-490
16	16-20 AWG	M39029/88-491	850-024-16-491
16	16-20 AWG	M39029/88-492	850-024-16-492
16	16-20 AWG	M39029/88-493	850-024-16-493

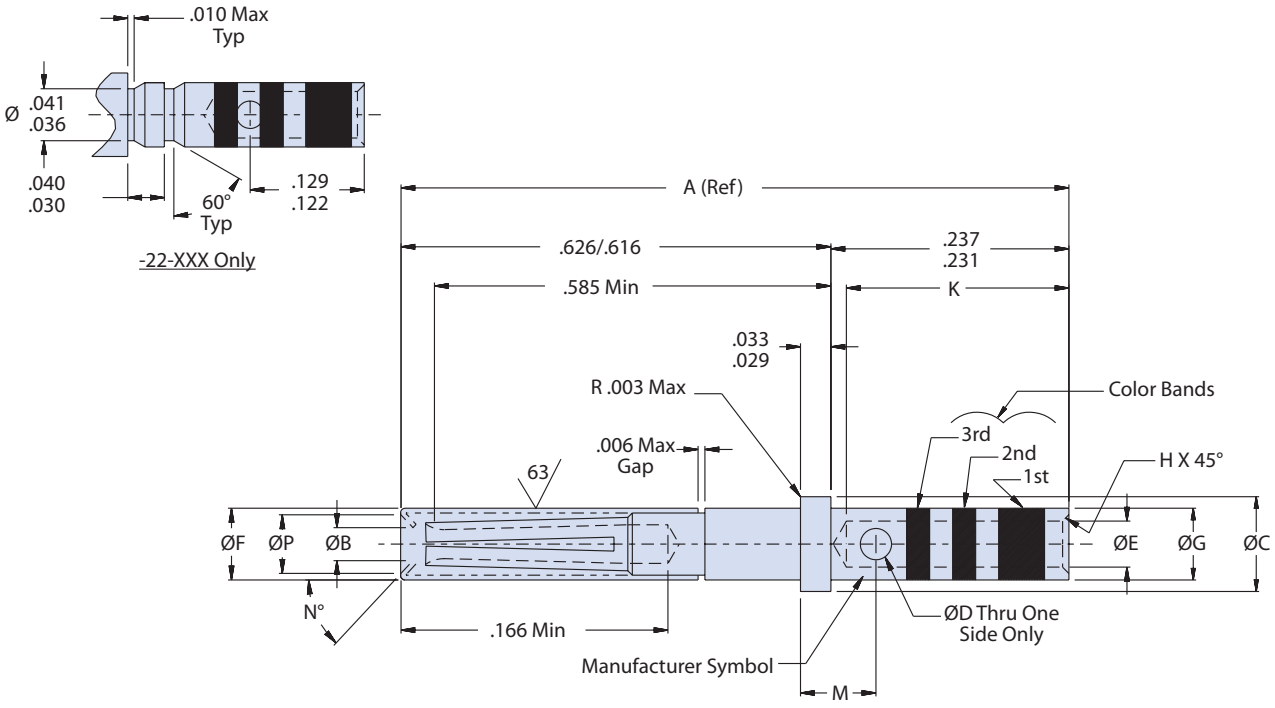

© 2011 Glenair, Inc.

850-024
AS39029/88 Type
Thermocouple Socket Contact

Glenair®

TABLE I: CONTACT DIMENSIONS

Size	Military Number	Glenair Part Number	A (ref)	ø B	ø C	ø D	ø E	ø F Max	ø G	ø H
22	M39029/88-482	850-024-22-482	.855	.031 Min	.062 .060	.022 .018	.0355 .0335	.062	.048 .046	.005 .003
	M39029/88-483	850-024-22-483								
	M39029/88-484	850-024-22-484								
	M39029/88-485	850-024-22-485								
20	M39029/88-486	850-024-20-486	.855	.044 .042	.094 .091	.032 .026	.048 .046	.078	.070 .068	.010 .005
	M39029/88-487	850-024-20-487								
	M39029/88-488	850-024-20-488								
	M39029/88-489	850-024-20-489								
16	M39029/88-490	850-024-16-490	.855	.064 Min	.130 .127	.042 .036	.068 .066	.113	.103 .101	.010 .005
	M39029/88-491	850-024-16-491								
	M39029/88-492	850-024-16-492								
	M39029/88-493	850-024-16-493								

TABLE I (Continued): CONTACT DIMENSIONS

Size	Military Number	Glenair Part Number	K	M	Color Bands			Material	Plating
					1st	2nd	3rd		
22	M39029/88-482	850-024-22-482	.141 Min	–	Yellow	Gray	Red	JN	None
	M39029/88-483	850-024-22-483			Yellow	Gray	Orange	KN	None
	M39029/88-484	850-024-22-484			Yellow	Gray	Yellow	KP	None
	M39029/88-485	850-024-22-485			Yellow	Gray	Green	JP	Cadmium Plate*
20	M39029/88-486	850-024-20-486	.229 .209	.078 .072	Yellow	Gray	Blue	JN	None
	M39029/88-487	850-024-20-487			Yellow	Gray	Violet	KN	None
	M39029/88-488	850-024-20-488			Yellow	Gray	Gray	KP	None
	M39029/88-489	850-024-20-489			Yellow	Gray	White	JP	Cadmium Plate*
16	M39029/88-490	850-024-16-490	.229 .209	.088 .082	Yellow	White	Black	JN	None
	M39029/88-491	850-024-16-491			Yellow	White	Brown	KN	None
	M39029/88-492	850-024-16-492			Yellow	White	Red	KP	None
	M39029/88-493	850-024-16-493			Yellow	White	Orange	JP	Cadmium Plate*

Per AS39029 spec, the composition designations have been changed as listed below:
JN =Type J negative (formerly constantan) **KP** =Type K positive (formerly chromel)
KN =Type K negative (formerly alumel) **JP** =Type J positive (formerly iron)

*Chromate Clear Coat.

TABLE II: TOOL COMPATIBILITY

Size	Military Number	Glenair Part Number	AWG Handling	Crimp Tool	Positioner	Insertion Tool	Extraction Tool
22	M39029/88-482	850-024-22-482	22, 24, 26, 28	M22520/2-01 M22520/7-01	M22520/2-07 M22520//7-05	M81969/14-01 M81969/8-01	M81969/14-01 M81969/8-02
	M39029/88-483	850-024-22-483					
	M39029/88-484	850-024-22-484					
	M39029/88-485	850-024-22-485					
20	M39029/88-486	850-024-20-486	20, 22, 24	M22520/7-01 M22520/2-01 M22520/1-01	M22520/7-08 M22520/2-10 M22520/1-04 (Red)	M81969/8-05 M81969/14-02	M81969/8-06 M81969/14-02
	M39029/88-487	850-024-20-487					
	M39029/88-488	850-024-20-488					
	M39029/88-489	850-024-20-489					
16	M39029/88-490	850-024-16-490	16, 18, 20	M22520/1-01 M22520/7-01	M22520/1-04 (Blue) M22520/7-04	M81969/8-07 M81969/14-03	M81969/8-08 M81969/14-03
	M39029/88-491	850-024-16-491					
	M39029/88-492	850-024-16-492					
	M39029/88-493	850-024-16-493					

© 2011 Glenair, Inc.

850-025
AS39029/89 Type
Thermocouple Socket Contact

D38999 Series II | MIL-DTL 24308

Thermocouple Socket Contact to Fit D38999 Series II and M24308 Connectors

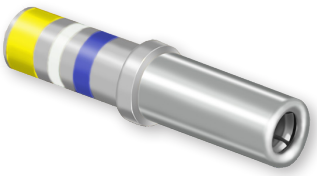

Mating End Size	Wire Accomodation	Military Part Number	Glenair Part Number
22	22-28 AWG	M39029/89-494	850-025-22-494
22	22-28 AWG	M39029/89-495	850-025-22-495
22	22-28 AWG	M39029/89-496	850-025-22-496
22	22-28 AWG	M39029/89-497	850-025-22-497
20	20-24 AWG	M39029/89-498	850-025-20-498
20	20-24 AWG	M39029/89-499	850-025-20-499
20	20-24 AWG	M39029/89-500	850-025-20-500
20	20-24 AWG	M39029/89-501	850-025-20-501
16	16-20 AWG	M39029/89-502	850-025-16-502
16	16-20 AWG	M39029/89-503	850-025-16-503
16	16-20 AWG	M39029/89-504	850-025-16-504
16	16-20 AWG	M39029/89-505	850-025-16-505

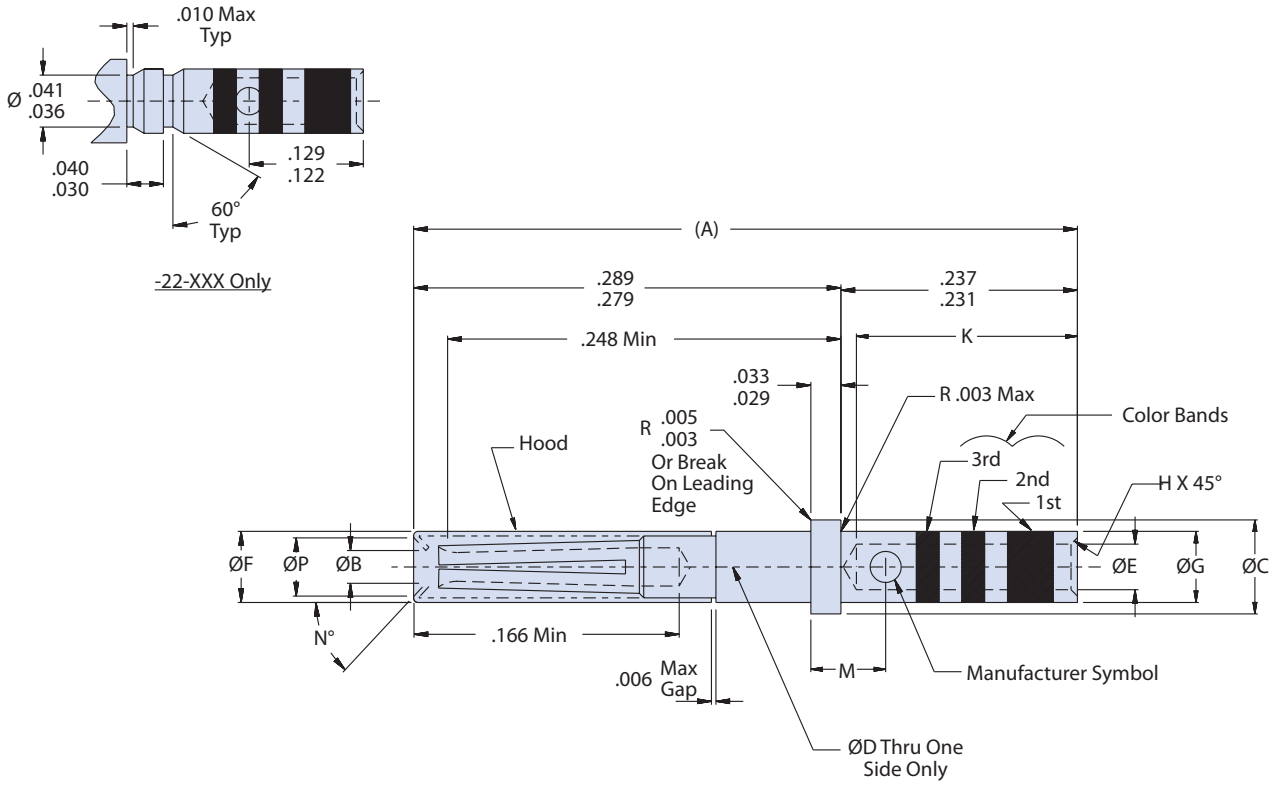

© 2011 Glenair, Inc.

850-025
AS39029/89 Type
Thermocouple Socket Contact

Glenair®

TABLE I: CONTACT DIMENSIONS

Size	Military Number	Glenair Part Number	A (ref)	ø B Min	ø C	ø D	ø E	ø F Max	ø G	H
22	M39029/89-494	850-025-22-494	.518	.031	.062 .060	.022 .018	.0355 .0335	.062	.048 .046	.005 .003
	M39029/89-495	850-025-22-495								
	M39029/89-496	850-025-22-496								
	M39029/89-497	850-025-22-497								
20	M39029/89-498	850-025-20-498	.518	.0415	.094 .091	.032 .026	.048 .046	.078	.070 .068	.010 .005
	M39029/89-499	850-025-20-499								
	M39029/89-500	850-025-20-500								
	M39029/89-501	850-025-20-501								
16	M39029/89-502	850-025-16-502	.518	.064	.130 .127	.042 .036	.068 .066	.113	.103 .101	.010 .005
	M39029/89-503	850-025-16-503								
	M39029/89-504	850-025-16-504								
	M39029/89-505	850-025-16-505								

TABLE I (Continued): CONTACT DIMENSIONS

Size	Military Number	Glenair Part Number	K Min	M	N°	ØP Min	Color Bands			Material	Plating
							1st	2nd	3rd		
22	M39029/89-494	850-025-22-494	.141	–	50° 44°	.047	Yellow	White	Yellow	JN	None
	M39029/89-495	850-025-22-495					Yellow	White	Green	KN	None
	M39029/89-496	850-025-22-496					Yellow	White	Blue	KP	None
	M39029/89-497	850-025-22-497					Yellow	White	Violet	JP	Cadmium Plate*
20	M39029/89-498	850-025-20-498	.209	.078 .072	47° 28°	.053	Yellow	White	Gray	JN	None
	M39029/89-499	850-025-20-499					Yellow	White	White	KN	None
	M39029/89-500	850-025-20-500					Green	Black	Black	KP	None
	M39029/89-501	850-025-20-501					Green	Black	Brown	JP	Cadmium Plate*
16	M39029/89-502	850-025-16-502	.209	.088 .082	47° 28°	.084	Green	Black	Red	JN	None
	M39029/89-503	850-025-16-503					Green	Black	Orange	KN	None
	M39029/89-504	850-025-16-504					Green	Black	Yellow	KP	None
	M39029/89-505	850-025-16-505					Green	Black	Green	JP	Cadmium Plate*

Per AS39029 spec, the composition designations have been changed as listed below:
JN =Type J negative (formerly constantan)
KN =Type K negative (formerly alumel)
KP =Type K positive (formerly chromel)
JP =Type J positive (formerly iron)

*Chromate Clear Coat.

TABLE II: TOOL COMPATIBILITY

Size	Military Number	Glenair Part Number	AWG Handling	Crimp Tool	Positioner	Insertion Tool	Extraction Tool
22	M39029/89-494	850-025-22-494	22, 24, 26, 28	M22520/2-01 M22520/7-01	M22520/2-06 M22520//7-06	M81969/14-01 M81969/8-01	M81969/14-01 M81969/8-02
	M39029/89-495	850-025-22-495					
	M39029/89-496	850-025-22-496					
	M39029/89-497	850-025-22-497					
20	M39029/89-498	850-025-20-498	20, 22, 24	M22520/7-01 M22520/2-01 M22520/1-01	M22520/7-08 M22520/2-10 M22520/1-04 (Red)	M81969/8-05 M81969/14-02	M81969/8-06 M81969/14-02
	M39029/89-499	850-025-20-499					
	M39029/89-500	850-025-20-500					
	M39029/89-501	850-025-20-501					
16	M39029/89-502	850-025-16-502	16, 18, 20	M22520/1-01 M22520/7-01	M22520/1-04 (Blue) M22520/7-04	M81969/8-07 M81969/14-03	M81969/8-08 M81969/14-03
	M39029/89-503	850-025-16-503					
	M39029/89-504	850-025-16-504					
	M39029/89-505	850-025-16-505					

© 2011 Glenair, Inc.

859-015
Wire Barrel Reducer Bushing
For Use with Crimp Contacts

Wire Barrel Reducer Bushing

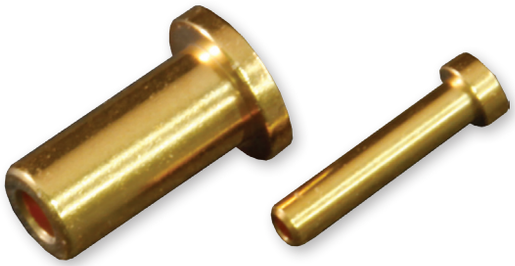

859-015 - Basic Part Number

"To" Wire Accommodation
See completed part numbers for list of available combinations.

Design Option
See Table I for option availability

859-015 **Z2** - **8** - **10** - **X**

Available Finishes
Z2 - Gold Plate
Z3 - Silver Plate

"From" Contact Wire Barrel Size
0, 4, 6, 8, 10, 12, 16, 20, 22, 22D

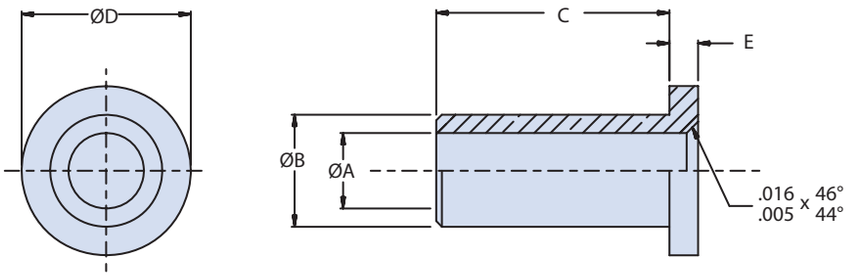

WARNING: Using smaller wire may not meet wire sealing requirement in environment resisting assemblies. The bushing may cause crimp barrel to bulge after crimping and may prevent the use of insertion/removal tool.

Contact Size	Standard Wire Accommodation (AWG) Without Bushing
0	0
4	4
6	6
8	8
10	10
12	12-14
16	16-20
20	20-24
22	22-26
22D	22-28

Material and Finish

Copper alloy per AS39029

Finish code Z2:
Bushings: gold plated per ASTM B488, Type II, Code C, .000050 min thick over nickel plated per AMS-QQ-N-290, Class 2, .000030/.000150 inch thick.

Finish code Z3:
Bushings: silver plated per ASTM B700, Grade A, Class N, thickness .0002000 min inch thisch over nickel plated per AMS-QQ-N-290 Class 2 .000030/.000150 inch thick.

Notes

1. Bushing must be installed into contact before crimping.
2. Bushings are designed to reduce the barrel size of reference AS39029 contacts to accommodate smaller wire size.
3. For proper environmental sealing of the grommet, use a shrink sleeve or potting may be required.
4. These bushings "to" wire (-28) can be used for both 28 AWG and 30 AWG wires.
5. Use the same Crimp Selector No. as intended for barrel wire size without bushing. For example: 859-015XXX-16-22, use the same selector as it is for 16 AWG wire size. User should verify crimpability on specific wire size/type.
6. for -16-28, use selector No. 6 for 28 AWG wire and selector No. 5 for 30 AWG wire on crimp tool M22520/1-01.
7. Operating Temperature: -55°C to +200°C.

© 2011 Glenair, Inc.

859-015
Wire Barrel Reducer Bushing
For Use with Crimp Contacts

Glenair®

Table I: Contact Reference

PART NUMBER	ø A	ø B	C MAX	ø D	E	REFERENCE TO USE WITH:
859-015**-10-12-1	.103 (2.62) .098 (2.49)	.130 (3.30) .125 (3.18)	.287 (7.29) .254 (6.45)	.186 (4.72) .154 (3.91)	.036 (0.91) .026 (0.66)	EQUIVALENT TO MS39029/112
859-015**-8-10	.138 (3.51) .133 (3.38)	.175 (4.44) .170 (4.32)	.397 (10.08) .364 (9.25)	.266 (6.76) .234 (5.94)	.036 (0.91) .026 (0.66)	
859-015**-6-10L	.138 (3.51) .133 (3.38)	.227 (5.77) .222 (5.64)	.717 (18.21) .684 (17.37)	.313 (7.95) .281 (7.14)	.036 (0.91) .026 (0.66)	ONLY FOR M39029/48 & 49- EQUIVALENT TO MS39029/112
859-015**-6-9L	.157 (3.99) .152 (3.86)	.227 (5.77) .222 (5.64)	.717 (18.21) .684 (17.37)	.313 (7.95) .281 (7.14)	.036 (0.91) .026 (0.66)	
859-015**-6-8L	.187 (4.75) .182 (4.62)	.277 (7.04) .222 (5.64)	.717 (18.21) .684 (17.37)	.313 (7.95) .281 (7.14)	.036 (0.91) .026 (0.66)	
859-015**-4-8L	.187 (4.75) .182 (4.62)	.274 (6.96) .269 (6.83)	.717 (18.21) .684 (17.37)	.360 (9.14) .328 (8.33)	.036 (0.91) .026 (0.66)	
859-015**-4-6	.227 (5.77) .222 (5.64)	.274 (6.96) .269 (6.83)	.397 (10.08) .364 (9.25)	.360 (9.14) .328 (8.33)	.036 (0.91) .026 (0.66)	EQUIVALENT TO MS39029/112
859-015**-4-6L	.227 (5.77) .222 (5.64)	.274 (6.96) .269 (6.83)	.717 (18.21) .684 (17.37)	.360 (9.14) .328 (8.33)	.036 (0.91) .026 (0.66)	
859-015**-4-5L	.252 (6.40) .247 (6.27)	.274 (6.96) .269 (6.83)	.717 (18.21) .684 (17.37)	.360 (9.14) .328 (8.33)	.036 (0.91) .026 (0.66)	
859-015**-1-6L	.227 (5.77) .222 (5.64)	.398 (10.11) .393 (9.98)	.717 (18.21) .684 (17.37)	.532 (13.51) .500 (12.70)	.036 (0.91) .026 (0.66)	
859-015**-1-2L	.361 (9.17) .356 (9.04)	.398 (10.11) .393 (9.98)	.717 (18.21) .684 (17.37)	.532 (13.51) .500 (12.70)	.036 (0.91) .026 (0.66)	
859-015**-0-2	.361 (9.17) .356 (9.04)	.446 (11.33) .441 (11.20)	.553 (14.05) .520 (13.21)	.532 (13.51) .500 (12.70)	.036 (0.91) .026 (0.66)	EQUIVALENT TO MS39029/112
859-015**-4/0-2/0L	.502 (12.75) .497 (12.62)	.631 (16.03) .626 (15.90)	.717 (18.21) .684 (17.37)	.735 (18.67) .703 (17.86)	.036 (0.91) .026 (0.66)	ONLY FOR M39029/48 & 49- EQUIVALENT TO MS39029/112
859-015**-22D-30	.017 (0.43) .013 (0.33)	.033 (0.84) .029 (0.74)	.135 (3.43) .130 (3.30)	.046 (1.17) .042 (1.07)	.030 (0.76) .020 (0.51)	FOR M39029/29, 30, 56, 57, 58,117,118,121&122 (Continues on following page) See Note 6
859-015**-20-28	.023 (0.58) .015 (0.38)	.046 (1.17) .042 (1.07)	.204 (5.18) .199 (5.05)	.068 (1.73) .064 (1.63)	.030 (0.76) .020 (0.51)	
859-015**-20-26	.028 (0.71) .020 (0.51)	.046 (1.17) .042 (1.07)	.204 (5.18) .199 (5.05)	.068 (1.73) .064 (1.63)	.030 (0.76) .020 (0.51)	
859-015**-16-22	.038 (0.97) .030 (0.76)	.066 (1.68) .062 (1.57)	.204 (5.18) .199 (5.05)	.101 (2.57) .097 (2.46)	.030 (0.76) .020 (0.51)	
859-015**-16-20	.059 (1.50) .039 (0.99)	.066 (1.68) .062 (1.57)	.204 (5.18) .199 (5.05)	.122 (3.10) .082 (2.08)	.030 (0.76) .020 (0.51)	
859-015**-16-24	.033 (0.84) .025 (0.64)	.066 (1.68) .062 (1.57)	.204 (5.18) .199 (5.05)	.101 (2.57) .097 (2.46)	.030 (0.76) .020 (0.51)	
859-015**-16-26	.028 (0.71) .020 (0.51)	.066 (1.68) .062 (1.57)	.204 (5.18) .199 (5.05)	.101 (2.57) .097 (2.46)	.030 (0.76) .020 (0.51)	
859-015**-16-28	.023 (0.58) .015 (0.38)	.066 (1.68) .062 (1.57)	.204 (5.18) .199 (5.05)	.101 (2.57) .097 (2.46)	.030 (0.76) .020 (0.51)	
859-015**-12-16	.071 (1.80) .063 (1.60)	.098 (2.49) .094 (2.39)	.204 (5.18) .199 (5.05)	.148 (3.76) .144 (3.66)	.030 (0.76) .020 (0.51)	
859-015**-12-18	.060 (1.52) .052 (1.32)	.098 (2.49) .094 (2.39)	.204 (5.18) .199 (5.05)	.148 (3.76) .144 (3.66)	.030 (0.76) .020 (0.51)	
859-015**-12-20	.051 (1.30) .043 (1.09)	.098 (2.49) .094 (2.39)	.204 (5.18) .199 (5.05)	.148 (3.76) .144 (3.66)	.030 (0.76) .020 (0.51)	
859-015**-12-22	.038 (0.97) .030 (0.76)	.098 (2.49) .094 (2.39)	.204 (5.18) .199 (5.05)	.148 (3.76) .144 (3.66)	.030 (0.76) .020 (0.51)	
859-015**-12-28	.023 (0.58) .015 (0.38)	.098 (2.49) .094 (2.39)	.204 (5.18) .199 (5.05)	.148 (3.76) .144 (3.66)	.030 (0.76) .020 (0.51)	
859-015**-10-12	.104 (2.64) .096 (2.44)	.134 (3.40) .130 (3.30)	.350 (8.89) .345 (8.76)	.177 (4.50) .173 (4.39)	.030 (0.76) .020 (0.51)	

D

© 2011 Glenair, Inc.

CAGE Code 06324

Printed in U.S.A.

Glenair®

859-015
Wire Barrel Reducer Bushing
For Use with Crimp Contacts

Table I: Contact Reference						
PART NUMBER	ø A	ø B	C MAX	ø D	E	REFERENCE TO USE WITH:
859-015**-10-16	.071 (1.80) .063 (1.60)	.134 (3.40) .130 (3.30)	.350 (8.89) .345 (8.76)	.177 (4.50) .173 (4.39)	.030 (0.76) .020 (0.51)	FOR M39029/29, 30, 56, 57, 58,117,118,121&122
859-015**-10-20	.051 (1.30) .043 (1.09)	.134 (3.40) .130 (3.30)	.350 (8.89) .345 (8.76)	.177 (4.50) .173 (4.39)	.030 (0.76) .020 (0.51)	
859-.015**-20-30	.017 (0.43) .013 (0.33)	.041 (1.04) .039 (0.99)	.142 (3.61) .138 (3.51)	.068 (1.73) .064 (1.63)	.030 (0.76) .020 (0.51)	FOR M39029/4, 5, 63, & 64
859-015**-20-28-1	.022 (0.56) .016 (0.41)	.041 (1.04) .039 (0.99)	.142 (3.61) .138 (3.51)	.068 (1.73) .064 (1.63)	.030 (0.76) .020 (0.51)	
859-015**-20-26-1	.027 (0.69) .021 (0.53)	.041 (1.04) .039 (0.99)	.142 (3.61) .138 (3.51)	.068 (1.73) .064 (1.63)	.030 (0.76) .020 (0.51)	
859-015**-16-22-1	.0355 (0.90) .0335 (0.85)	.062 (1.57) .057 (1.45)	.128 (3.25) .124 (3.15)	.101 (2.57) .091 (2.31)	.030 (0.76) .020 (0.51)	FOR M39029/22
859-015**-12-16-1	.068 (1.73) .066 (1.68)	.093 (2.36) .088 (2.24)	.164 (4.17) .159 (4.04)	.147 (3.73) .137 (3.48)	.030 (0.76) .020 (0.51)	
859-015**-12-20-1	.048 (1.22) .046 (1.17)	.093 (2.36) .088 (2.24)	.164 (4.17) .159 (4.04)	.147 (3.73) .137 (3.48)	.030 (0.76) .020 (0.51)	
859-015**-16-22-2	.0355 (0.90) .0335 (0.85)	.062 (1.57) .057 (1.45)	.185 (4.70) .180 (4.57)	.101 (2.57) .091 (2.31)	.030 (0.76) .020 (0.51)	FOR ARINC 404
859-015**-12-16-2	.068 (1.73) .066 (1.68)	.093 (2.36) .088 (2.24)	.185 (4.70) .180 (4.57)	.147 (3.73) .137 (3.48)	.030 (0.76) .020 (0.51)	
859-015**-12-20-2	.048 (1.22) .046 (1.17)	.093 (2.36) .088 (2.24)	.185 (4.70) .180 (4.57)	.147 (3.73) .137 (3.48)	.030 (0.76) .020 (0.51)	
859-015**-16-22-3	.0355 (0.90) .0335 (0.85)	.057 (1.45) .052 (1.32)	.145 (3.68) .140 (3.56)	.091 (2.31) .081 (2.06)	.030 (0.76) .020 (0.51)	FOR M39029/16, 17 &18
859-015**-12-16-3	.068 (1.73) .066 (1.68)	.093 (2.36) .088 (2.24)	.169 (4.29) .164 (4.17)	.147 (3.73) .137 (3.48)	.030 (0.76) .020 (0.51)	
859-015**-12-20-3	.048 (1.22) .046 (1.17)	.093 (2.36) .088 (2.24)	.169 (4.29) .164 (4.17)	.147 (3.73) .137 (3.48)	.030 (0.76) .020 (0.51)	
859-015**-8-10-1	.138 (3.51) .133 (3.38)	.175 (4.44) .170 (4.32)	.412 (10.46) .407 (10.34)	.262 (6.65) .252 (6.40)	.036 (0.91) .026 (0.66)	FOR M39029/16, 17 &18 FOR M39029/29 & M39029/30
859-015**-8-12	.102 (2.59) .098 (2.49)	.175 (4.44) .170 (4.32)	.412 (10.46) .407 (10.34)	.262 (6.65) .252 (6.40)	.036 (0.91) .026 (0.66)	
859-015**-8-16	.068 (1.73) .066 (1.68)	.175 (4.44) .170 (4.32)	.412 (10.46) .407 (10.34)	.262 (6.65) .252 (6.40)	.036 (0.91) .026 (0.66)	
859-015**-8-20	.048 (1.22) .046 (1.17)	.175 (4.44) .170 (4.32)	.412 (10.46) .407 (10.34)	.262 (6.65) .252 (6.40)	.036 (0.91) .026 (0.66)	
859-015**-4-6-1	.227 (5.77) .222 (5.64)	.274 (6.96) .269 (6.83)	.412 (10.46) .407 (10.34)	.360 (9.14) .350 (8.89)	.036 (0.91) .026 (0.66)	
859-015**-4-8	.187 (4.75) .182 (4.62)	.274 (6.96) .269 (6.83)	.412 (10.46) .407 (10.34)	.360 (9.14) .350 (8.89)	.036 (0.91) .026 (0.66)	
859-015**-0-8	.185 (4.70) .175 (4.44)	.446 (11.33) .441 (11.20)	.500 (12.70) .495 (12.57)	.532 (13.51) .522 (13.26)	.036 (0.91) .026 (0.66)	
859-015**-0-4	.283 (7.19) .279 (7.09)	.446 (11.33) .441 (11.20)	.500 (12.70) .495 (12.57)	.532 (13.51) .522 (13.26)	.036 (0.91) .026 (0.66)	
859-015**-0-2-1	.361 (9.17) .356 (9.04)	.446 (11.33) .441 (11.20)	.500 (12.70) .495 (12.57)	.532 (13.51) .522 (13.26)	.036 (0.91) .026 (0.66)	

© 2011 Glenair, Inc.

Glenair®

850-111
AS39029/63 Type
Thermocouple Socket Contact, Size #20

MIL-DTL 24308

Series 28 HiPer-D

Thermocouple Socket Contact to Fit MIL-DTL-24308 and Series 28 HiPer-D connectors

Part Number	Material	Finish	Color Band
850-111-20-01	KN	None	Red
850-111-20-02	KP	None	None

Per AS39029 spec, the composition designations have been changed as listed below:
KN =Type K negative (formerly alumel) **KP** =Type K positive (formerly chromel)

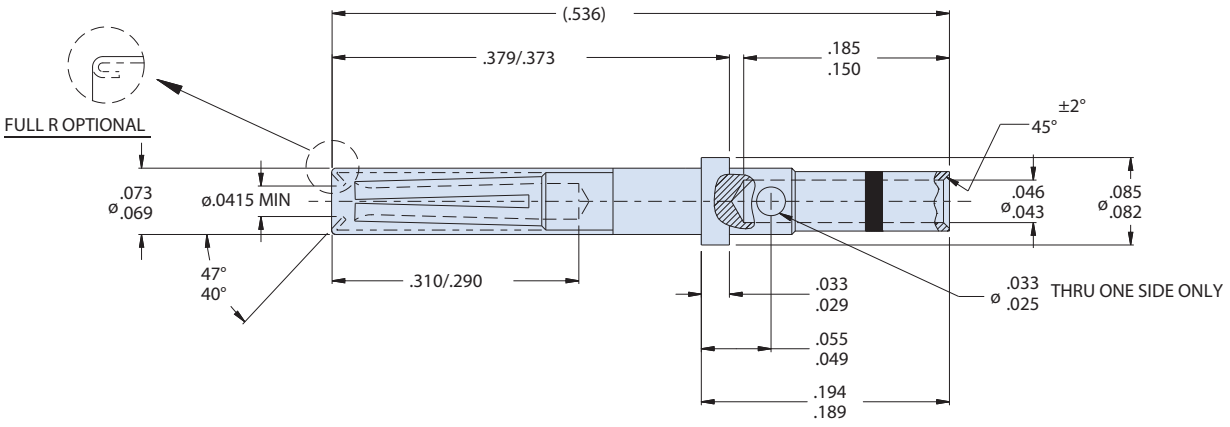

Notes
1. Material/Finish per Part Number, hood = passivated stainless steel.
2. These contacts meet the applicable requirements of AS39029/63, except Type C material for thermocouple.
3. Crimp tooling per AS39029/63

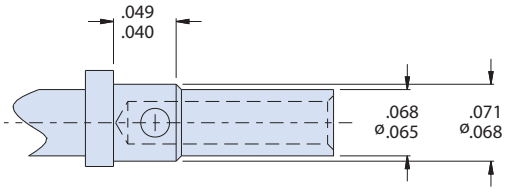

(COLOR BANDS OMITTED FOR CLARITY)

© 2011 Glenair, Inc.

850-112
AS39029/64 Type
Thermocouple Pin Contact , Size #20

MIL-DTL 24308

Series 28 HiPer-D

Thermocouple Pin Contact to Fit MIL-DTL-24308 and Series 28 HiPer-D connectors

Part Number	Material	Finish	Color Band
850-112-20-01	KN	None	Red
850-112-20-02	KP	None	None

Per AS39029 spec, the composition designations have been changed as listed below:
KN =Type K negative (formerly alumel) **KP** =Type K positive (formerly chromel)

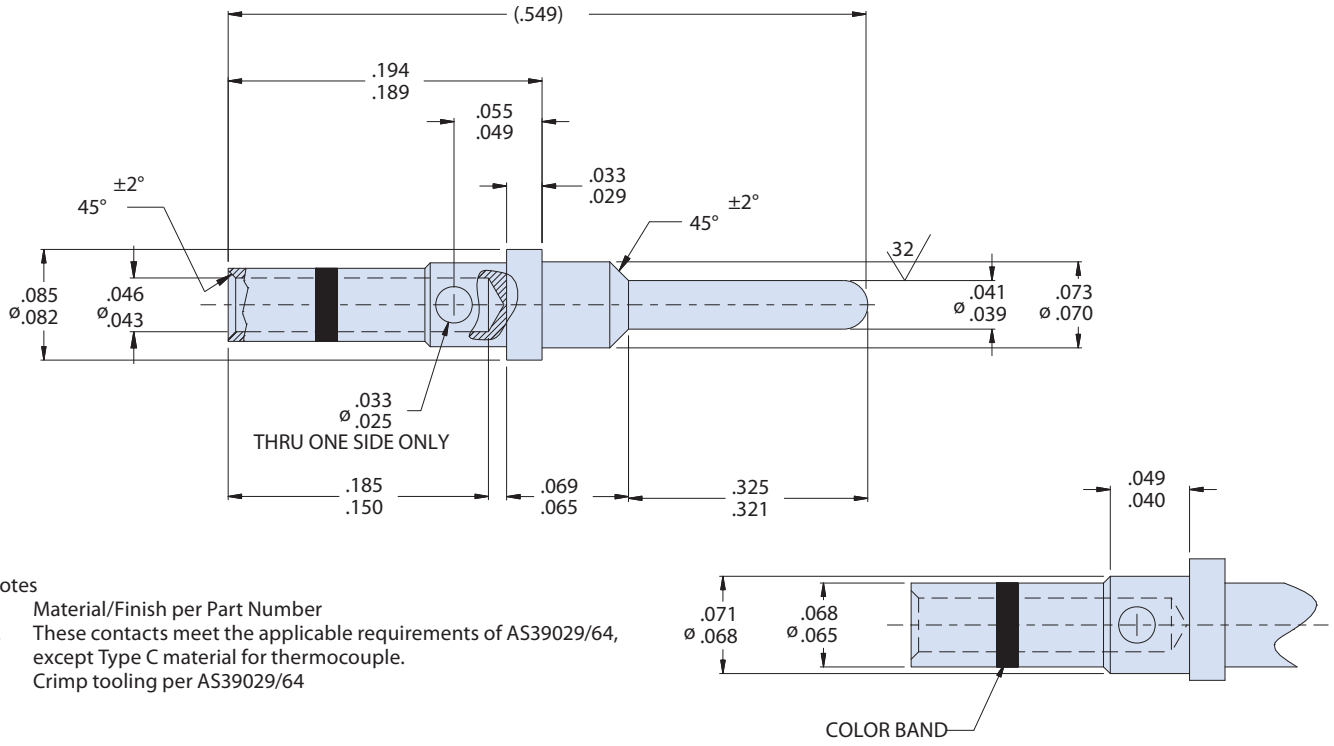

Notes
1. Material/Finish per Part Number
2. These contacts meet the applicable requirements of AS39029/64, except Type C material for thermocouple.
3. Crimp tooling per AS39029/64

© 2011 Glenair, Inc.

SERIES 77

FULL NELSON

Heat Shrink Boots

Outstanding Environmental and Mechanical Protection

"Think he'll ever break that hold?
Nope. He's got him in a Full Nelson!"



Nothing conjures up the image of an unbreakable hold like a Standing Full Nelson. Properly applied, this classic Greco-Roman wrestling move is simply unbeatable. We'd like to think the same holds true for our Series 77 *Full Nelson* Environmental Shrink Boots. Properly applied, Series 77 boots provide a dependable, leak-proof seal for interconnect cable assemblies. Optional adhesive coatings on the inside of the boot provide a watertight, high-strength bond to the cable jacket and the connector or adapter. And the Glenair shape-memory boot material formula works every time. So if you're worried about sealing effectiveness, if you want long-lasting environmental protection, if you want an ingress prevention solution that won't lose it's grip after years and years of service, get a Series 77 *Full Nelson*—the environmental shrink boot with the iron grip of a championship wrestler.

Glenair®

1211 Air Way • Glendale, CA 91201-2497 • Tel: 818-247-6000 • Fax: 818-500-9912 • E-Mail: sales@glenair.com

Tools and Accessories

Crimp Tools, Positioners, Insertion and Extraction Tools and More

Outstanding Product Availability

Many of the contacts in this book utilize crimping technology to effect contact to wire termination. The non-mating end of a crimp contact (the wire barrel) is a hollow cylinder into which a stripped wire (conductor) is inserted. The sidewalls of the wire barrel are then mechanically compressed (uniformly deformed) using a crimping tool to captivate the stripped wire.

The crimped wire to contact termination can then be manually, or with the assistance of a hand-held tool, clipped into place in the connector. The physical compression (deformation) of a contact barrel around a conductor in order to make an electrical connection must be accomplished in a proscribed and precise manner using the exact tools and accessories to achieve the desired gas tight crimp. This section of the book presents an organized inventory for all the tools and accessories necessary, including contact insertion and extraction tools, for the reliable termination and use of SAE-AS39029 and other industry standard crimp type contacts.



- Industry Standard Crimp Tools and Accessories
- One-Stop-Tool-Shopping for All Glenair Contact Types and Sizes
- Outstanding Technical Support and Assembly Procedures
- Same-Day Availability on Most Popular Tools and Accessories

© 2011 Glenair, Inc.
CAGE Code 06324
Printed in U.S.A.

Miniature Adjustable Crimp Tools





These crimp tools perform precision eight indent crimps for gas tight wire terminations and excellent tensile strength. Adjustment wheel has 8 settings. Ratchet mechanism prevents improper crimps. Use with bayonet type positioners. Check calibration with M22520/3 gages. Length is 6.75 inches, weight is approx. 10 oz.

A Standard M22520/2-01 crimper. Use with standard #23, #22D and #20HD contacts, and with M39029/76 and /78 coaxial center contacts. Requires positioner, ordered separately.

B Special MH992 crimper used with 50 ohm matched impedance coaxial inner contacts. Requires positioner, ordered separately.

Figure	Part Number	Military Part Number	Daniels Part Number
A	809-015	M22520/2-01	AFM8
B	809-128	(none)	MH992

Positioners For Use With Miniature Adjustable Crimp Tools















These bayonet-type positioners hold contacts at correct height for crimping with M22520/2 type miniature step adjustable tools, above. Face plate shows correct tool settings.

Figure	Part Number	Military Part Number	Daniels Part Number	For Use With
C	809-005	(none)	K1461	Size #23 contacts for #22-#28 AWG wire
D	809-057	(none)	(none)	Small bore #23 for #26-#30 AWG wire
E	809-125	M22520/2-35	K532-1	M39029/76 and /78 coax inner contact
F	809-124	(none)	K1360	Matched impedance #12 coax inner contact
G	809-135	M22520/2-34	K323	M39029/27 and /28 coax inner contact
H	859-006	(none)	K1721	Matched impedance #12 coax inner contact. (Use with 809-128 crimp tool)
I	809-206	(none)	(none)	#20HD contacts
Not Shown		M22520/2-10	K43	#20 contact, series I, II, III and IV
		M22520/2-09	K42	#22D contact, series I, II, III and IV Pin
		M22520/2-07	K40	#22D contact, series I, III and IV Socket
		M22520/2-06	K41	#22D contact, series II Socket
		M22520/2-35	K532-1	#16 contact, series I, II, III and IV
		M22520/2-37	K709	Quadrax Inner Contact

© 2011 Glenair, Inc.

Crimp Tool And Positioner For #12, #16 and #20 Power Contacts, Crimp Adapters



J Crimp tool for use with size #20, #16 and #12 power pins. 9.75 inches OAL, 1.25 pounds. Use with M39029/57 and /58 contacts and 809-093 adapters.

K Positioner for use with size #20, #12 and #16 Power contacts.

L Positioner for use with 809-093 Mighty Mouse and Micro Crimp wire adapters.

Figure	Part Number	Military Part Number	Daniels Part Number
J	809-136	M22520/1-01	AF8
K	809-137	M22520/1-04	TH163
L	809-138	(none)	TH653

Crimp Tool And Positioner For #16 Coaxial Outer Contact



For crimping size #16 shield sleeves. These mil spec approved tools feature a ratchet mechanism to prevent damage from over crimping. Check calibration with M22520/3 gage.

M Crimp tool for use with size #16 coaxial contacts. Blue handles. 9.75 inches OAL, 1.25 pounds.

N Positioner for use with size #16 coaxial contacts. Use with 809-127 (M22520/4-01) crimp tool.

Figure	Part Number	Military Part Number	Daniels Part Number
M	809-127	M22520/4-01	GS100-1
N	809-126	M22520/4-02	GP295

Crimp Tool And Positioner For #12 Coaxial Outer Contact



For crimping size #12 shield sleeves. These mil spec approved tools feature a ratchet mechanism to prevent damage from over crimping. Check calibration with M22520/3 gage.

O Crimp tool for use with size #12 coaxial contacts. Black handles. 9.75 inches OAL, 1.25 pounds.

P Positioner for use with size #12 coaxial contacts. Use with 809-133 (M22520/31-01) crimp tool.

Figure	Part Number	Military Part Number	Daniels Part Number
O	809-133	M22520/31-01	GS200-1
P	809-134	M22520/31-02	G2P330

Parallel Action Crimp Tool and Hex Die Set for 50 Ohm Matched Impedance #12 Coax

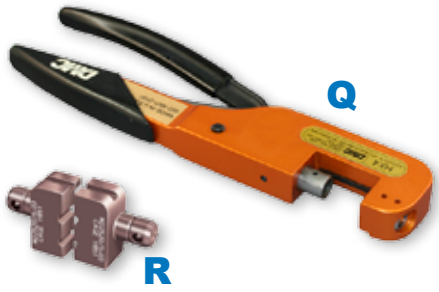

Q Parallel action tool for use with hex crimp dies. 11 inches OAL, 2.0 pounds. Anodized aluminum frame, steel mechanism, plastic handles. Includes tool for die set extraction. Accepts all M22520/5 die sets.

R Die set for terminating coaxial shield to outer contact. Use with size #12 matched impedance M39029/102 and 103 type coaxial contacts. Set consists of upper and lower halves. Made of hardened steel with black oxide finish. Die set has two closures.

Figure	Part Number	Military Part Number	Daniels Part Number
Q	809-129	M22520/5-01	HX4
R	809-130	M22520/5-03	Y196

© 2011 Glenair, Inc.

Contact Tools
Contact Insertion and Extraction Tools
and Contact Retention Tester 809-107

Contact Insertion and Extraction Tools

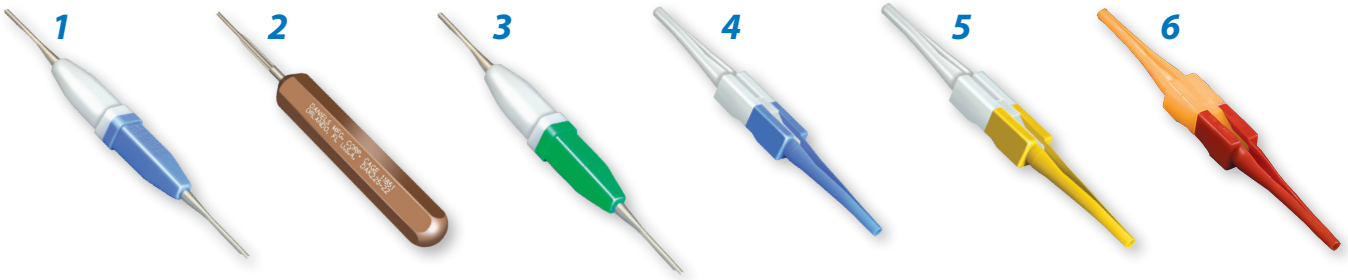

1 Insertion/Extraction Tool for #23 Contacts. This tool features molded plastic grips and sturdy stainless steel tips. Blue/White molded handle.

2 Insertion Tool for #23 Contacts. This tool features anodized aluminum handle and stainless steel insertion tip.

3 Insertion/Extraction Tool for #20HD Contacts. This tool features molded plastic grips and sturdy stainless steel tips. Green/White molded handle.

4 Insertion/Extraction Tool for #16 Contacts. Use with size #16 coaxial or power contacts. Economical molded plastic. White extraction tip, blue insertion tip.

5 Insertion/Extraction Tool for #12 Contacts. Use with size #12 coaxial or power contacts. Molded plastic. White extraction tip, yellow insertion tip.

6 Insertion/Extraction Tool for #20 Contacts. Molded plastic. Orange extraction tip, red insertion tip.

Figure	Size	Type	Part Number	Military Part Number	Daniels Part Number
1	#23	Insertion/Extraction	809-088	(None)	(None)
2	#23	Insertion Only	809-013	(None)	DAK225-22
3	#20HD	Insertion/Extraction	809-203D	(None)	(None)
4	#16	Insertion/Extraction	809-131	M81969/14-03	(None)
5	#12	Insertion/Extraction	809-132	M81969/14-04	(None)
6	#20	Insertion/Extraction	809-207	M81969/14-10	(None)
	#22	Insertion/Extraction	(None)	M81969/14-01	(None)

Contact Retention Tester for Size #23 Contacts



Check for properly seated contacts with this spring-loaded tester. Apply the tool tip to the mating end of a contact. Push on the handle until the spring compresses to the recommended force. A visual indicator shows full compression. The contact is properly retained if it is not displaced.

The adjustable handle should be set to 3.2 pounds (14.2 N). The pin tip is used with #23 pin contacts. The socket tip is used with #23 socket contacts.

Order the complete kit, or order the tips and handle separately.

Figure	Description	Part Number	Daniels Part Number
1	Handle	809-107-1	HT250-2
2	Pin Tip	809-107-2	68-023-01
	Socket Tip (not shown)	809-107-3	67-023-01
	Complete Kit	809-107-4	(None)

© 2011 Glenair, Inc.

Fiber Optic Terminus Crimping Tool for M29504, GHD, GFOCA and NGCON

The Glenair fiber optic crimping tool enables users to quickly and effectively terminate the crimp sleeve to the cable strength member for a secure mechanical junction. The tool is compatible with many common termini styles, including M29504, Glenair High Density (GHD), GFOCA and NGCON.

Part Number	Compatible Termini	
182-012	181-039	M29504/14 Pin
	181-040	M29504/15 Socket
	181-011	#16 Socket
	181-012	#16 Pin
	181-047	Genderless GHD, Keyed
	181-056	Genderless GHD, Non-Keyed
	181-050	Genderless GFOCA
	181-043	Genderless NGCON

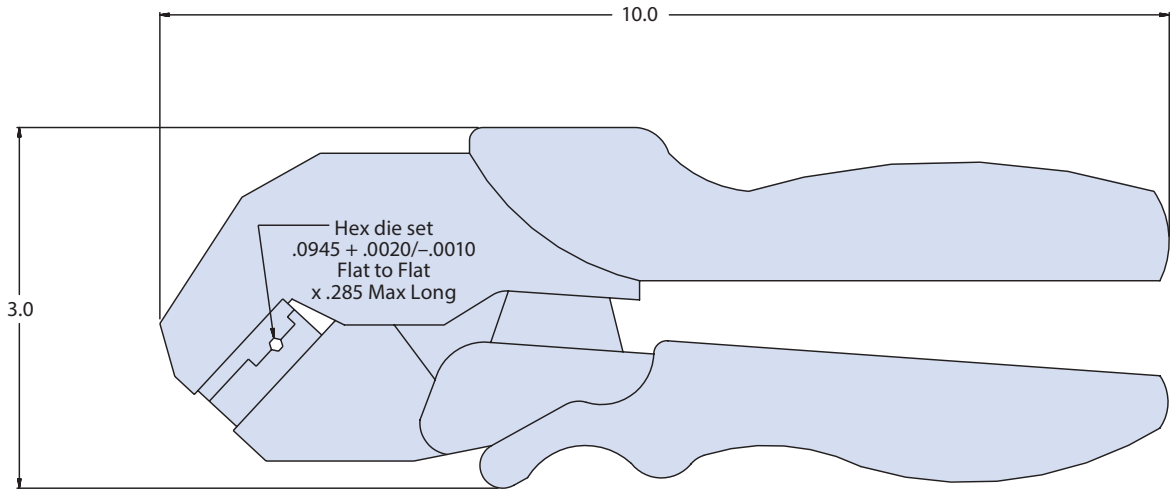

© 2011 Glenair, Inc.

182-013
Straight Insertion Tool
For Fiber Optic Termini

Straight Insertion Tool for Fiber Optic Termini

The preferred tool of seasoned fiber optic technicians, the Glenair straight insertion tool is designed to aid users in populating connectors with fiber optic termini. Gone are the days of damaged fibers and sore fingers—this convenient tool features a comfortable handle and specially designed insertion tip for use with M29504, GHD and many other termini available from Glenair.

Part Number	Compatible Termini	
182-013	181-039	M29504/14 Pin
	181-040	M29504/15 Socket
	181-051	M29504/03 Dummy
	181-011	#16 Socket
	181-012	#16 Pin
	181-021	#16 Socket
	181-022	#16 Pin
	181-056	Genderless GHD, Non-Keyed

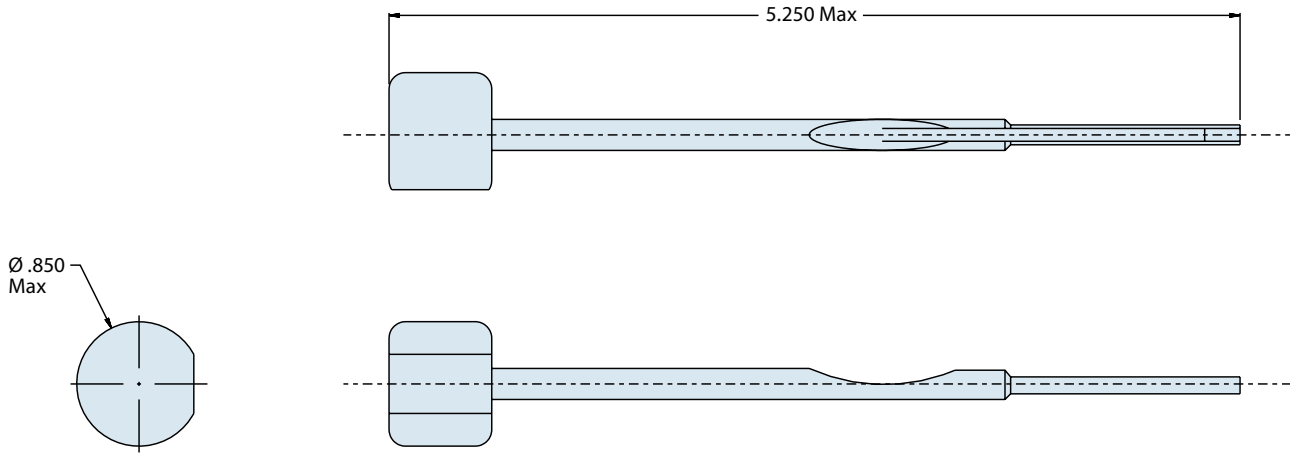

© 2011 Glenair, Inc.

Right Angle (90°) Insertion Tool for Fiber Optic Termini

The Glenair 90° terminus insertion tool is designed to help populate connectors with fiber termini in situations where space is limited—while offering users the same easy insertion as with our straight 182-013 tool. Ideal for use in boxes and on connectors with backshells that inhibit normal rear insertion. Designed for use with M29504, GHD and many other termini available from Glenair.

Part Number	Compatible Termini	
182-014	181-039	M29504/14 Pin
	181-040	M29504/15 Socket
	181-051	M29504/03 Dummy
	181-011	#16 Socket
	181-012	#16 Pin

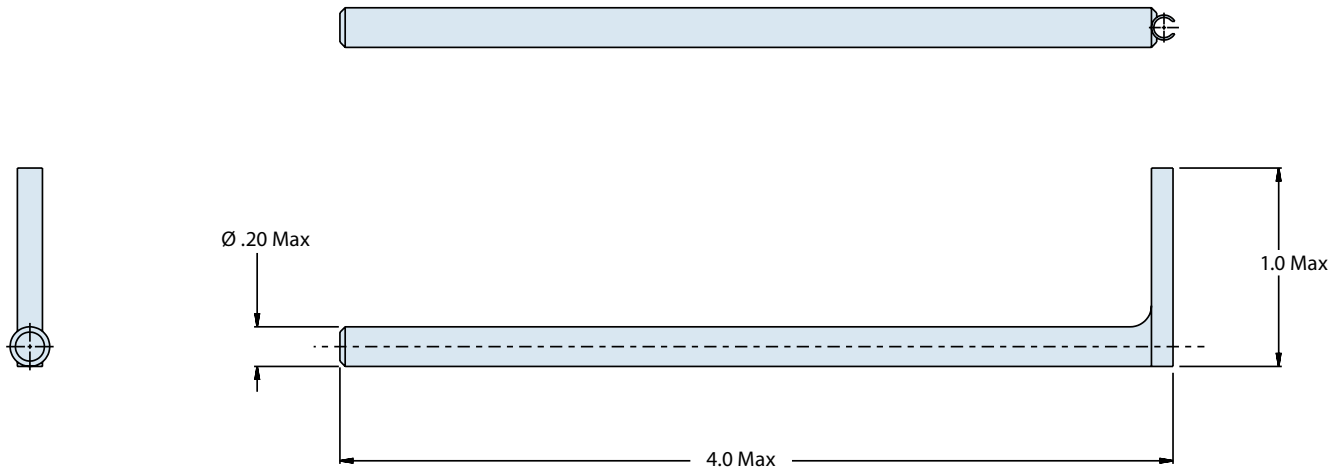

© 2011 Glenair, Inc.

182-015
Extraction Tool
For Fiber Optic Termini

Extraction Tool for Fiber Optic Termini

The Glenair fiber optic terminus extraction tool is designed for use with front release/rear entry termini. Sliding the tool into the face of the insulator and depressing the plunger—after first removing the alignment sleeve with an 182-016 tool—enables users to quickly and easily remove the fiber terminus from the rear of the insert. Compatible with Glenair front release fiber optic termini.

Part Number	Compatible Termini	
182-015	181-039	M29504/14 Pin
	181-040	M29504/15 Socket
	181-051	M29504/03 Dummy
	181-011	#16 Socket
	181-012	#16 Pin

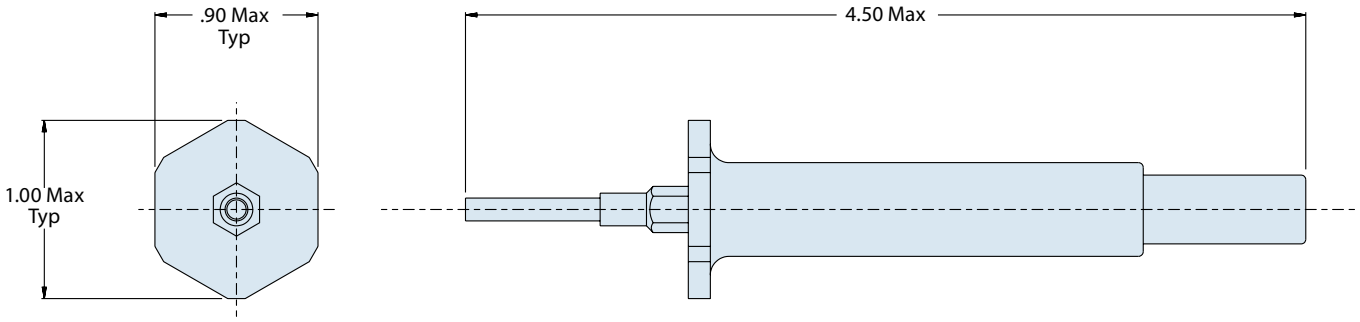

© 2011 Glenair, Inc.

Alignment Sleeve Insertion/Extraction Tool for Fiber Optic Termini

The Glenair alignment sleeve extraction tool utilizes a special claw to extract alignment sleeves from the face of front-release fiber optic inserts. Users are afforded easy serviceability of front release termini by sliding the tool's tip into the front of the insert, depressing the plunger, allowing the claws to purchase on the alignment sleeve, then gently pulling away from the face of the connector. Used in conjunction with 182-015 terminus extraction tool.

Part Number	Compatible Termini	
182-016	181-040	M29504/15 Socket
	181-011	#16 Socket

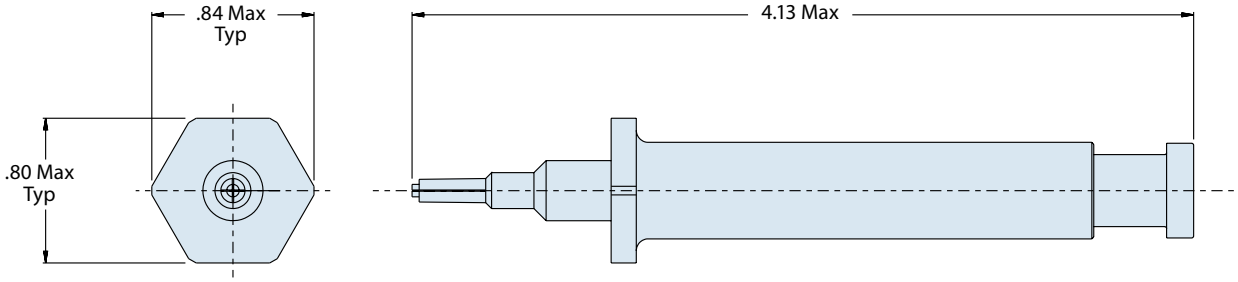

© 2011 Glenair, Inc.

BAND-IT

THE EMI/RFI BRAID BANDING SOLUTION

High-Speed Termination of EMI/RFI Cable Shielding (Screening) with Easy to Use *BAND-IT®* Tools and Bands.



Glenair®

1211 Air Way • Glendale, CA 91201-2497 • Tel: 818-247-6000 • Fax: 818-500-9912 • E-Mail: sales@glenair.com

Military Part Number	Glenair Part Number	Contact Size	Wire Accommodation	Pin / Socket	BIN Color Striping			Product Page
M39029/56-348	850-001-22-348	22	22-28 AWG	Socket	Orange	Yellow	Grey	A-6
M39029/56-351	850-001-20-351	20	20-24 AWG	Socket	Orange	Green	Brown	
M39029/56-352	850-001-16-352	16	16-20 AWG	Socket	Orange	Green	Red	
M39029/56-353	850-001-12-353	12	12-14 AWG	Socket	Orange	Green	Orange	
M39029/56-527	850-001-10-527	10	10 AWG	Socket	Green	Red	Violet	
M39029/57-354	850-003-22-354	22	22-28 AWG	Socket	Orange	Green	Yellow	A-8
M39029/57-357	850-003-20-357	20	20-24 AWG	Socket	Orange	Green	Violet	
M39029/57-358	850-003-16-358	16	16-20 AWG	Socket	Orange	Green	Grey	
M39029/57-359	850-003-12-359	12	12-14 AWG	Socket	Orange	Green	White	
M39029/58-360	850-002-22-360	22	22-28 AWG	Pin	Orange	Blue	Black	A-10
M39029/58-363	850-002-20-363	20	20-24 AWG	Pin	Orange	Blue	Orange	
M39029/58-364	850-002-16-364	16	16-20 AWG	Pin	Orange	Blue	Yellow	
M39029/58-365	850-002-12-365	12	12-14 AWG	Pin	Orange	Blue	Green	
M39029/58-528	850-002-10-528	10	10 AWG	Pin	Green	Red	Grey	
M39029/63-368	850-021-20-368	20	20-24 AWG	Socket	Orange	Blue	Grey	A-12
M39029/64-369	850-022-20-369	20	20-24 AWG	Pin	Orange	Blue	White	A-13
M39029/83-450	850-004-20-450	20	22-26 AWG	Pin	Yellow	Green	Black	A-14
M39029/83-451	850-004-20-451	20	28-32 AWG	Pin	Yellow	Green	Brown	
M39029/83-508	850-004-20-508	20	20-24 AWG	Pin	Green	Black	Grey	
M39029/84-452	850-005-20-452	20	22-26 AWG	Socket	Yellow	Green	Red	A-16
M39029/84-453	850-005-20-453	20	28-32 AWG	Socket	Yellow	Green	Orange	
M39029/84-509	850-005-20-509	20	20-24 AWG	Socket	Green	Black	White	
M39029/106-614	850-006-22-614	22	22-28 AWG	Socket	Blue	Brown	Yellow	A-18
M39029/106-615	850-006-20-615	20	20-24 AWG	Socket	Blue	Brown	Green	
M39029/106-616	850-006-16-616	16	16-20 AWG	Socket	Blue	Brown	Blue	
M39029/106-617	850-006-12-617	12	12-14 AWG	Socket	Blue	Brown	Violet	
M39029/106-618	850-006-10-618	10	10 AWG	Socket	Blue	Brown	Grey	
M39029/107-620	850-007-22-620	22	22-28 AWG	Pin	Blue	Red	Black	A-20
M39029/107-621	850-007-20-621	20	20-24 AWG	Pin	Blue	Black	Brown	
M39029/107-622	850-007-16-622	16	16-20 AWG	Pin	Blue	Red	Red	
M39029/107-623	850-007-12-623	12	12-14 AWG	Pin	Blue	Red	Orange	
M39029/107-624	850-007-10-624	10	10 AWG	Pin	Blue	Red	Yellow	

© 2011 Glenair, Inc.

Chapter B: High-Performance Shielded Contacts
Part Number Index

Military Part Number	Glenair Part Number	Contact Size	Pin / Socket	Contact Type	BIN Color Striping			Product Page
M39029/27-210	852-001-12-210	12	Socket	Coaxial	Red	Brown	Black	B-4
M39029/27-402	852-001-12-402	12	Socket	Coaxial	Yellow	Black	Red	
M39029/27-403	852-001-12-403	12	Socket	Coaxial	Yellow	Black	Orange	
M39029/27-404	852-001-12-404	12	Socket	Coaxial	Yellow	Black	Yellow	
M39029/27-405	852-001-12-405	12	Socket	Coaxial	Yellow	Black	Green	
M39029/27-406	852-001-12-406	12	Socket	Coaxial	Yellow	Black	Blue	
M39029/27-407	852-001-12-407	12	Socket	Coaxial	Yellow	Black	Violet	
M39029/27-408	852-001-12-408	12	Socket	Coaxial	Yellow	Black	Gray	
M39029/28-211	852-002-12-211	12	Pin	Coaxial	Red	Brown	Brown	B-6
M39029/28-409	852-002-12-409	12	Pin	Coaxial	Yellow	Black	White	
M39029/28-410	852-002-12-410	12	Pin	Coaxial	Yellow	Brown	Black	
M39029/28-411	852-002-12-411	12	Pin	Coaxial	Yellow	Brown	Brown	
M39029/28-412	852-002-12-412	12	Pin	Coaxial	Yellow	Brown	Red	
M39029/28-413	852-002-12-413	12	Pin	Coaxial	Yellow	Brown	Orange	
M39029/28-414	852-002-12-414	12	Pin	Coaxial	Yellow	Brown	Yellow	
M39029/28-415	852-002-12-415	12	Pin	Coaxial	Yellow	Brown	Green	
M39029/59-366	852-006-08-366	08	Socket	Coaxial	Orange	Blue	Blue	B-14
M39029/60-367	852-007-08-367	08	Pin	Coaxial	Orange	Blue	Violet	B-15
M39029/75-416	852-003-12-416	12	Socket	Coaxial	Yellow	Brown	Blue	B-8
M39029/75-417	852-003-12-417	12	Socket	Coaxial	Yellow	Brown	Violet	
M39029/75-418	852-003-12-418	12	Socket	Coaxial	Yellow	Brown	Gray	
M39029/75-419	852-003-12-419	12	Socket	Coaxial	Yellow	Brown	White	
M39029/75-420	852-003-12-420	12	Socket	Coaxial	Yellow	Red	Black	
M39029/75-421	852-003-12-421	12	Socket	Coaxial	Yellow	Red	Brown	
M39029/75-422	852-003-12-422	12	Socket	Coaxial	Yellow	Red	Red	
M39029/75-423	852-003-12-423	12	Socket	Coaxial	Yellow	Red	Orange	
M39029/76-424	852-008-16-424	16	Pin	Coaxial	Yellow	Red	Yellow	B-16
M39029/76-425	852-008-16-425	16	Pin	Coaxial	Yellow	Red	Green	

© 2011 Glenair, Inc.

Chapter B: High-Performance Shielded Contacts
Part Number Index

Military Part Number	Glenair Part Number	Contact Size	Pin / Socket	Contact Type	BIN Color Striping			Product Page
M39029/76-426	852-008-16-426	16	Pin	Coaxial	Yellow	Red	Blue	B-16
M39029/76-427	852-008-16-427	16	Pin	Coaxial	Yellow	Red	Violet	
M39029/77-428	852-009-16-428	16	Socket	Coaxial	Yellow	Red	Gray	B-18
M39029/77-429	852-009-16-429	16	Socket	Coaxial	Yellow	Red	White	
M39029/77-430	852-009-16-430	16	Socket	Coaxial	Yellow	Orange	Black	
M39029/77-431	852-009-16-431	16	Socket	Coaxial	Yellow	Orange	Brown	
M39029/78-432	852-010-16-432	16	Socket	Coaxial	Yellow	Orange	Red	B-20
M39029/78-433	852-010-16-433	16	Socket	Coaxial	Yellow	Orange	Orange	
M39029/78-434	852-010-16-434	16	Socket	Coaxial	Yellow	Orange	Yellow	
M39029/78-435	852-010-16-435	16	Socket	Coaxial	Yellow	Orange	Green	
M39029/90-529	853-001-08-529	8	Pin	Concentric Twinax	Green	Red	White	B-22
M39029/91-530	853-002-08-530	8	Socket	Concentric Twinax	Green	Orange	Black	B-23
M39029/102-558	852-004-12-558	12	Pin	Coaxial	Green	Green	Gray	B-10
M39029/103-559	852-005-12-559	12	Socket	Coaxial	Green	Green	White	B-12
M39029/113-625	853-003-08-625	8	Pin	Concentric Twinax	Blue	Red	Green	B-24
M39029/113-626	853-003-08-626	8	Pin	Concentric Twinax	Blue	Red	Blue	
M39029/114-628	853-004-08-628	8	Socket	Concentric Twinax	Blue	Red	Gray	B-25
M39029/114-629	853-004-08-629	8	Socket	Concentric Twinax	Blue	Red	White	
N/A	854-001-01	8	Pin	Quadrax	N/A			B-26
	854-001-02	8	Pin	Quadrax				
	854-001-03	8	Pin	Quadrax				
	854-001-04	8	Pin	Quadrax				
	854-001-05	8	Pin	Quadrax				
	854-002-01	8	Socket	Quadrax				B-27
	854-002-02	8	Socket	Quadrax				
	854-002-03	8	Socket	Quadrax				
	854-002-04	8	Socket	Quadrax				
	854-002-05	8	Socket	Quadrax				

© 2011 Glenair, Inc.

Chapter C: Fiber Optic Termini
Part Number Index

Glenair Part Number	Part Description	Contact Size	Pin / Socket	Connector Series	Product Page
MIL-DTL-38999 Fiber Optic Contacts					
181-001	M29504/5 Socket Terminus	16	Socket	D38999 Series III	C-4
181-002	M29504/4 Pin Terminus	16	Pin	D38999 Series III	C-6
181-035	Socket, Large Core Fiber	16	Socket	D38999 Series III	C-8
181-036	Pin, Large Core Fiber	16	Pin	D38999 Series III	C-9
181-052	Jewel Pin Terminus	16	Pin	D38999 Series III	C-10
181-053	Jewel Socket Terminus	16	Socket	D38999 Series III	C-11
181-048	Sealing Plug	16	Pin	D38999 Series III	C-12
181-065	#20 Pin Terminus	20	Pin	D38999 Series III	C-13
181-066	#20 Socket Terminus	20	Socket	D38999 Series III	C-14
MIL-PRF-28876 Fiber Optic Contacts					
181-039	M29504/14 Pin Terminus	16	Pin	M28876	C-15
181-040	M29504/15 Socket Terminus	16	Socket	M28876	C-16
181-051	M29504/3 Dummy Terminus	16	Dummy	M28876	C-33
Series 80 Mighty Mouse Fiber Optic Contacts					
181-057	Mighty Mouse Pin Terminus	16	Pin	Series 80 Mighty Mouse	C-18
181-075	Mighty Mouse Socket Terminus	16	Socket	Series 80 Mighty Mouse	C-19
Special Fiber Optic COTS Contacts Size 16 Front Release					
181-011	Front Release Socket with Pressure Sealing O-Ring(s)	16	Socket	COTS	C-20
181-012	Front Release Pin	16	Pin	COTS	C-22
181-051	M29504/3 Dummy Terminus	16	Dummy	COTS	C-33
ARINC Type Fiber Optic Contacts					
181-076	ARINC 801 Terminus	16	Genderless Pin	ARINC 801	C-24
187-079	M29504/6 Pin Terminus	16	Pin	ARINC 404, 600	C-25
187-080	M29504/7 Socket Terminus	16	Socket	ARINC 404, 600	C-26
Glenair High Density (GHD) Fiber Optic Contacts					
181-056	GHD Terminus, Non-keyed	18	Genderless Pin	GHD	C-28
181-047	GHD Terminus, Keyed	18	Genderless Pin	GHD	C-30
181-058	Dummy Terminus	18	Dummy	GHD	C-32
Glenair GFOCA Fiber Optic Contacts					
181-050	GFOCA Terminus		Genderless Pin	GFOCA	C-34
181-059	Dummy Terminus		Dummy	GFOCA	C-36
Next Generation Fiber Optic (NGCON) Contacts					
181-043	M29504/18	16	Genderless Pin	M64266	C-37

© 2011 Glenair, Inc.

Chapter D: Special Purpose Contacts
Part Number Index

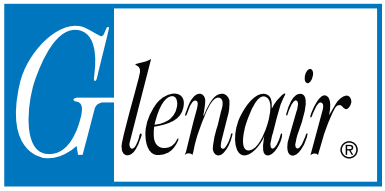

Glenair Part Number	Part Description	Contact Size	Type	Product Page
859-xxx	Grommet Sealing Plugs (MS27488 Type)	0-23	Sealing Plug	D-3
809-001	Series 80 Mighty Mouse Pin Contact	23	Crimp Contact	D-4
809-002	Series 80 Mighty Mouse Socket Contact	23	Crimp Contact	D-5
857-010	Pneumatic Socket Contact for Series 79	12	Pneumatic	D-6
857-011	Pneumatic Pin Contact for Series 79	12	Pneumatic	D-7
850-010	PCB Pin Contact to fit D38999/20 and /24	12-22	PCB Pin	D-8
850-011	PCB Socket Contact to fit D38999/20 and /24	12-22	PCB Socket	D-9
850-013	High Power Socket Contact	8	Power Socket	D-10
850-014	High Power Pin Contact	8	Power pin	D-11
850-015	M39029/56 Type Socket Contact with Solder Cup	10-22	Solder Cup	D-12
850-016	Pin Contact with Solder Cup	10-22	Solder Cup	D-14
850-017	M39029/58 Type Pin Contact with Solder Cup	12-22	Solder Cup	D-16
850-018	M39029/56-348 Type Socket Contact	22	Crimp Contact	D-18
850-019	M39029/58-360 Type Pin Contact	22	Crimp Contact	D-19
850-020	M39029/57 Type Socket Contact	22	Crimp Contact	D-20
857-027	M39029/58 Type High Power Pin with PC Tails	8	PCB Power	D-21
857-028	M39029/56 Type High Power Socket with PC Tails	8	PCB Power	D-22
687-348	Wire to Contact Crimp Adapter		Crimp Adapter	D-23
850-023	M39029/87 Thermocouple Pin Contact	16, 20, 22	Thermocouple	D-24
850-024	M39029/88 Thermocouple Socket Contact; Series I, II, IV	16, 20, 22	Thermocouple	D-26
850-025	M39029/89 Thermocouple Socket Contact; Series II	16, 20, 22	Thermocouple	D-28

© 2011 Glenair, Inc.

Chapter E: Tools and Accessories
Part Number Index

Glenair Part Number	Military Part Number	Part Description	Product Page
		Miniature Adjustable Crimp Tools	
809-015	M22520/2-01	Standard miniature hand crimp tool	E-2
809-128	N/A	Special miniature hand crimp tool for use with 50ohm matched impedance contacts	
		Positioners For Use With M22520/2 Miniature Adjustable Crimp Tool	
809-005	N/A	Size #23 contacts for #22-#28 AWG wire	E-2
809-057	N/A	Small bore #23 for #26-#30 AWG wire	
809-125	M22520/2-35	M39029/76 and /78 coax inner contact	
809-124	N/A	Matched impedance #12 coax inner contact	
809-135	M22520/2-34	M39029/27 and /28 coax inner contact	
859-006	N/A	Matched impedance #12 coax inner contact. (Use with 809-128 crimp tool)	
809-206	N/A	#20HD contacts	
N/A	M22520/2-10	#20 contact, series I, II, III and IV	
N/A	M22520/2-09	#22D contact, series I, II, III and IV Pin	
N/A	M22520/2-07	#22D contact, series I, III and IV Socket	
N/A	M22520/2-06	#22D contact, series II Socket	
N/A	M22520/2-35	#16 contact, series I, II, III and IV	
N/A	M22520/2-34	#12 contact, series I, II, III and IV	
N/A	M22520/2-37	Quadrax Inner Contact	
		Crimp Tool And Positioner For #12, #16 And #20 Power Contacts	
809-136	M22520/1-01	Crimp tool for use with size #20, #16 and #12 power pins	E-3
809-137	M22520/1-04	Positioner for use with size #20, #12 and #16 Power contacts	
809-138	N/A	Positioner for use with 809-093 adapters	
		Crimp Tool And Positioner For #16 Coaxial Outer Contact	
809-127	M22520/4-01	Crimp tool for use with size #16 coaxial contacts.	E-3
809-126	M22520/4-02	Positioner for use with size #16 coaxial contacts	

© 2011 Glenair, Inc.

Glenair Part Number	Military Part Number	Part Description	Product Page
		Crimp Tool And Positioner For #12 Coaxial Outer Co Ntact	
809-133	M22520/31-01	Crimp tool for use with size #12 coaxial contacts.	E-3
809-134	M22520/31-02	Positioner for use with size #12 coaxial contacts	
		Parallel Action Crimp Tool And Hex Die Set For 50 Ohm Matched Impedance #12 Contacts	
809-129	M22520/5-01	Parallel action tool for use with hex crimp dies	E-3
809-130	M22520/5-03	Die set for terminating coaxial shield to outer contact	
		Contact Insertion and Extraction Tools	
809-088	N/A	#23 Insertion/Extraction	E-4
809-013	N/A	#23 Insertion Only	
809-203	N/A	#20HD Insertion/Extraction	
809-131	M81969/14-03	#16 Insertion/Extraction	
809-132	M81969/14-04	#12 Insertion/extraction	
809-207	M81969/14-10	#20 Insertion/extraction	
		Contact Retention Tester For #23 Contacts	
809-107-1	N/A	Tester Handle	E-4
809-107-2	N/A	Pin Tip	
809-107-3	N/A	Socket Tip	
809-107-4	N/A	Complete Kit	
		Fiber Optic Assembly Tools	
182-012	N/A	Fiber optic terminus crimping tool	E-5
182-013	N/A	Straight insertion tool for fiber optic termini	E-6
182-014	N/A	Right angle 90° insertion tool for fiber optic termini	E-7
182-015	N/A	Extraction tool for fiber optic termini	E-8
182-016	N/A	Alignment sleeve insertion/extraction tool for fiber optic termini	E-9

© 2011 Glenair, Inc.

WHY CHOOSE GLENAIR?



Outstanding Customer Service!



Plenty of Raw Materials!



In-House Assembly!

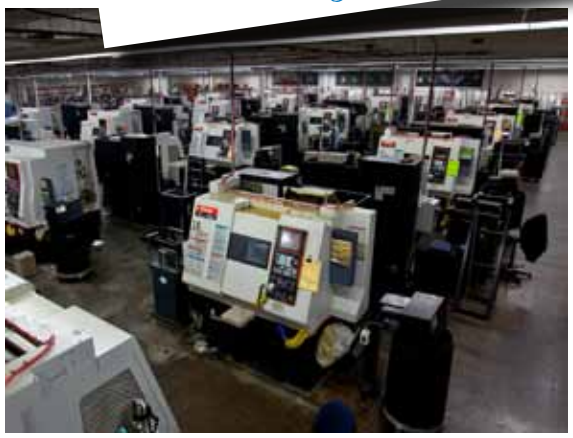

Abundant Machining Capacity!



Huge "Same-Day" Inventory!

Glenair®

Glenair®

A World of Interconnect Solutions

Glenair, Inc.
1211 Air Way • Glendale, California • 91201-2497
Telephone: 818-247-6000 • Fax: 818-500-9912 • sales@glenair.com
www.glenair.com

Glenair Power Products Group
860 N. Main Street Extension
Wallingford, CT
06492
Telephone: 203-741-1115
Facsimile: 203-741-0053
sales@glenair.com

Glenair UK Ltd
40 Lower Oakham Way
Oakham Business Park
P.O. Box 37, Mansfield
Notts, NG18 5BY England
Telephone: 44-1623-638100
Facsimile: 44-1623-638111
sales@glenair.co.uk

Glenair Microway Systems
7000 North Lawndale Avenue
Lincolnwood, IL
60712
Telephone: 847-679-8833
Facsimile: 847-679-8849

Glenair Nordic AB
Gustav III : S Boulevard 46
S - 169 27 Solna
Sweden
Telephone: 46-8-50550000
Facsimile: 46-8-50550001
sales@glenair.se

Glenair Electric GmbH
Siemensstrasse 9
D-61449 Steinbach
Germany
Telephone: 49-6171-5905-0
Facsimile: 49-6171-5905-90
germany@glenair.com

Glenair Iberica
C/ La Vega, 16
45612 Velada
Spain
Telephone: 34-925-89-29-88
Facsimile: 34-925-89-29-87
sales@glenair.es

Glenair Italia S.R.L.
Via Santi, 1
20037 Paderno Dugnano
Milano, Italy
Telephone: 39-02-9108-2121
Facsimile: 39-02-9904-3565
sales-italia@glenair.it

Glenair France SARL
7, Avenue Parmentier
Immeuble Central Parc #2
31200 Toulouse
France
Telephone: 33-5-34-40-97-40
Facsimile: 33-5-61-47-86-10
sales@glenair.fr

© 2011 Glenair, Inc.

Printed in U.S.A.

Held Hostage to Long Lead Times?

Need a Contact Now?

M39029 Contacts In Stock!



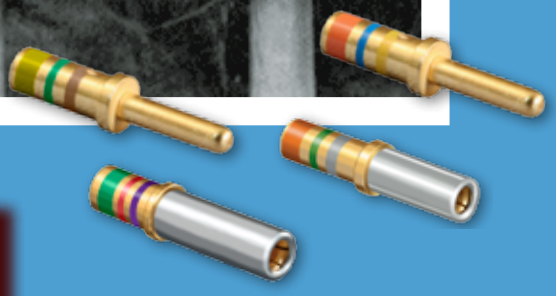

Glenair®

1211 Air Way
Glendale, California 91201-2497
Telephone: 818-247-6000 · Facsimile: 818-500-9912 · E-mail: sales@glenair.com

United States · United Kingdom · Germany · Nordic · France · Italy · Spain · Japan

www.glenair.com