SERIES 77

Lipped, Straight Shrink Boots

770-004S Short Straight Boot, without Eyelet
How to Order



Lipped, straight shrink boots provide mechanical and environmental protection from damage and debris. Short straight boots are available in eight material options with five adhesive choices. Glenair straight boots fit most standard boot adapters for circular connectors. All adhesive lined and unlined shrink books are RoHS compliant. Shrink boots are water-tight when equipped with factory installed or user-installed adhesive. Lipped boots lock into boot groove located on adapter and can be ordered with potting holes or drain holes according to your requirements. Choose boot size based on adapter diameter and cable diameter. Short profile boots ideal for reduced package size applications.

How to Order								
Sample Part Number	**770**	**-004**	**S**	**1**	**03**	**W1**	**-PP**	
Product Series	**770** = Series 77 shrink boot							
Basic Number	**004** = short lipped boot							
Angular Function	**S** = straight							
Material	See material and adhesives table							
Boot Size	**03**, **04**, **05**, **06**, **07**, **08**, **09**; see shell size in dimensions table							
Adhesive Lined	**Omit** for no adhesive; see material and adhesives table							
Potting Ports or Drain Holes	**PP** = potting port **DH** = drain hole **Omit** for none							

Material and Adhesive Compatibility						
Material Code	Material Description (Compound No.)	Hot Melt Adhesives			High Performance Epoxy Adhesives	
		W1	**W2**	**W3** (TACOM approved)	**R**	**U**
		High Temperature -55°C to 125°C	Standard -55°C to 70°C	Elastomeric -55°C to 125°C	Pre-Coat -75°C to 150°C	Two-Part -75°C to 155°C
1	High-Performance Semi-Rigid Elastomer (2025)	●	●		●	Type U epoxy adhesive is compatible with all boot materials. Ordered separately, user-installed (779-001). Order boot with no adhesive lining.
2	Zero Halogen Semi-Rigid Polyolefin (2010)	●	●		●	
3	General Purpose Flexible Polyolefin (2040)		●			
5	Viton Fluoroelastomer Blend (2050)	●		●	●	
6	High Performance Elastomer Alloy (2051)	●		●		
7	Semi-Rigid Polyolefin (2071)	●	●			
8	Low Outgassing Fluoropolymer Alloy (2008)	Material Type 8 not available with pre-coat adhesive. Use Type U two-part epoxy				
9	Low Temp Flexible Polyolefin (2013)		●			

NOTES

1. See **Modification Codes** listed in Section A for material color options available for **Type 1 (compound 2025)** material.
2. Recovered dimension apply to unrestricted recovery. Dimensions may differ than shown when boots are installed over assembly.

© 2017 Glenair, Inc • 1211 Air Way, Glendale, CA 91201 • 818-247-6000 • www.glenair.com • Series 77 Full Nelson Shrink Boot Catalog
U.S. CAGE code 06324 • Dimensions in Inches (millimeters) are subject to change without notice.

Lipped, Straight Shrink Boots

770-004S Short Straight Boot, without Eyelet Dimensions

Lipped Straight Adapter Shrink Boots, Short: Dimensions

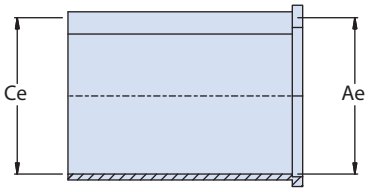

As Supplied

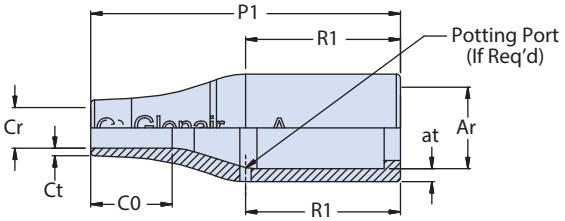

Recovered (-004)

Dimensions Table											
Boot Size	Glenair Us Part Marking	Shell Size	Ae DIA MIN	Ce DIA MIN	Ar DIA MAX	at ±30%	Cr DIA MAX	ct ±20%	CO REF	P1 ±10%	R1 REF
03	S03	8,10	.945 (24.0)	.945 (24.0)	.413 (10.5)	.063 (1.6)	.197 (5.0)	.035 (0.9)	.394 (10.0)	1.024 (26.0)	.276 (7.0)
04	S04	11-16	1.181 (30.0)	1.181 (30.0)	.551 (14.0)	.071 (1.8)	.236 (6.0)	.039 (1.0)	.630 (16.0)	1.693 (43.0)	.709 (18.0)
05	S05	16-17	1.260 (32.0)	1.260 (32.0)	.709 (18.0)	.071 (1.8)	.276 (7.0)	.047 (1.2)	.748 (19.0)	1.850 (47.0)	.512 (13.0)
06	S06	17-21	1.417 (36.0)	1.417 (36.0)	.866 (22.0)	.079 (2.0)	.335 (8.5)	.047 (1.2)	.787 (20.0)	2.362 (60.0)	.787 (20.0)
07	S07	21-23	1.693 (43.0)	1.693 (43.0)	1.102 (28.0)	.087 (2.2)	.394 (10.0)	.051 (1.3)	1.142 (29.0)	3.150 (80.0)	1.417 (36.0)
08	S08	25	2.362 (60.0)	2.362 (60.0)	1.378 (35.0)	.130 (3.3)	.591 (15.0)	.063 (1.6)	1.575 (40.0)	4.331 (110.0)	1.181 (30.0)
09	S09		2.599 (66.0)	2.599 (66.0)	1.752 (44.5)	.150 (3.8)	.661 (16.8)	.079 (2.0)	2.283 (58.0)	5.910 (150.0)	2.760 (70.0)

For materials Type 2, Type 3 and Type 9, dimension 'Ce' is nominal

Lipped Straight Shrink Boots: Part Marking, Raised Lettering

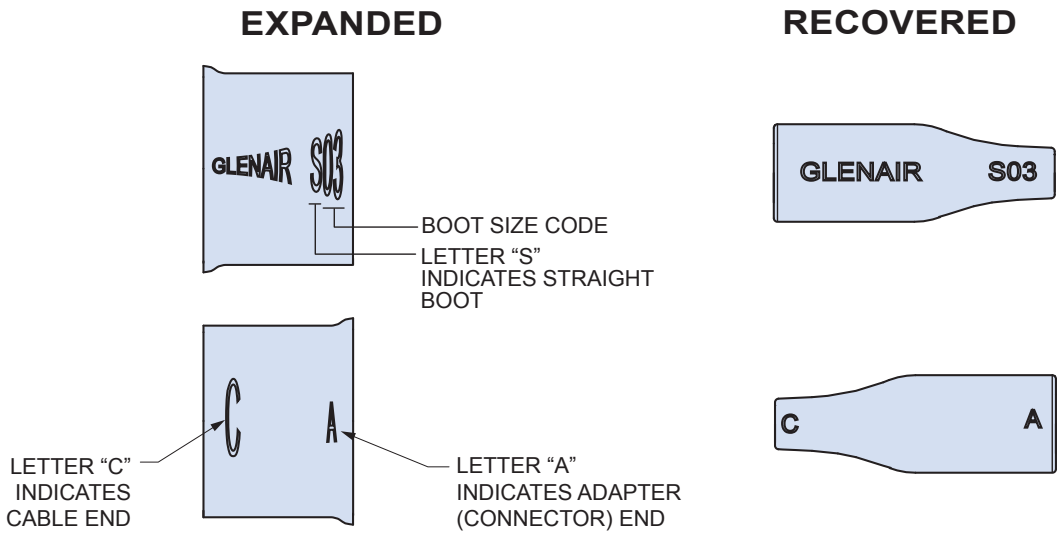

© 2017 Glenair, Inc • 1211 Air Way, Glendale, CA 91201 • 818-247-6000 • www.glenair.com • Series 77 Full Nelson Shrink Boot Catalog
U.S. CAGE code 06324 • Dimensions in Inches (millimeters) are subject to change without notice.