PRODUCT NUMBER	DESCRIPTION	NOTES
10125417-XXXXLF	NON-HF	SEE SHT. 3

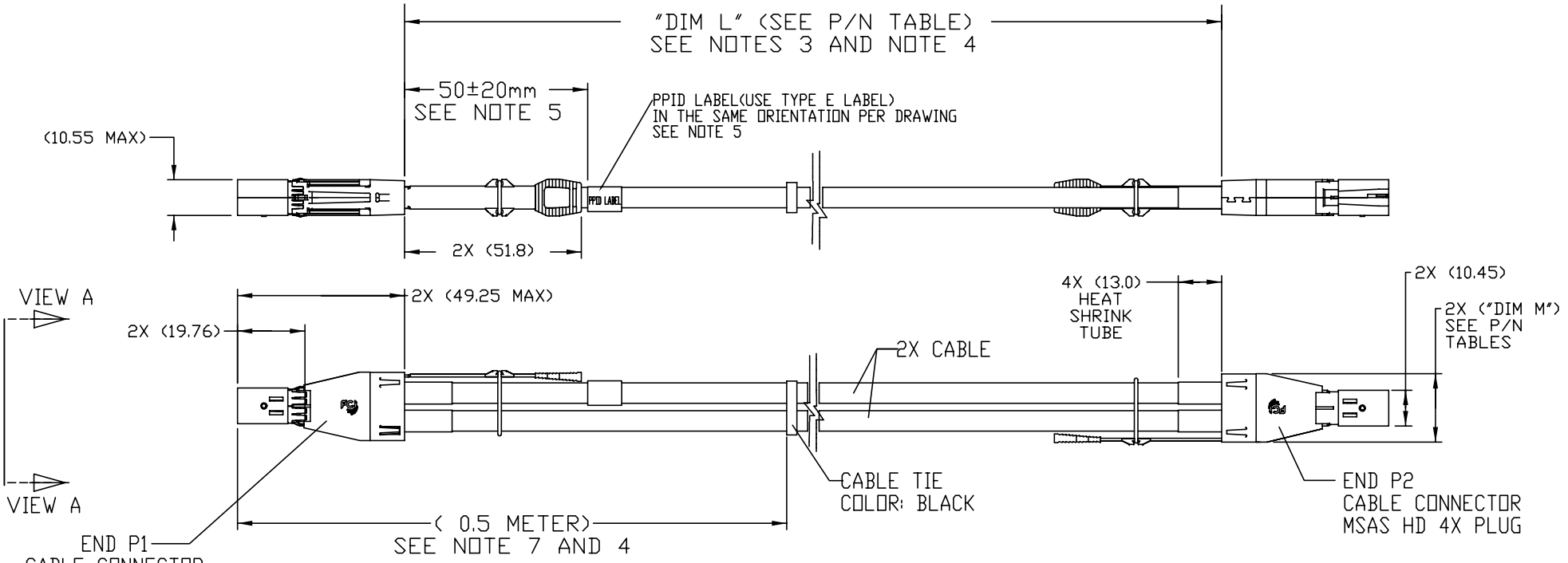

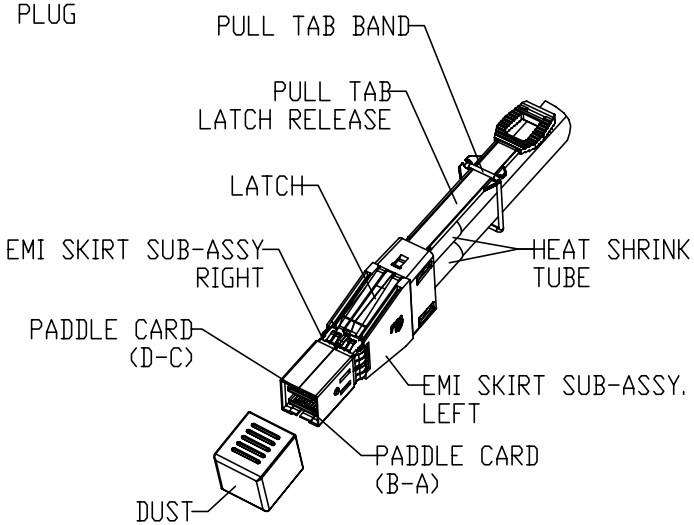

ISOMETRIC
VIEW
MINI SAS HD
2X

Copyright FCI.

dr	Tom Feng	2014-09-04	projection	mm	size A3	scale NTS
eng	Tom Feng	2014-09-04			ecn no	ECN-ELX-N-18706-1
chr	Delhly Liu	2014-09-04	product family	C&A	rel level	Released
appr	Frank Mao	2014-09-04				

FCI	title: FINAL ASSEMBLY (PASSIVE) MSAS HD 4X ASSEMBLY (APPLICATION UP TO 6Gb/s)	dwg no 10125417	rev B
www.fci.com	cat. no. -	Product - Customer Drw	sheet 1 of 5

Pro/E File - REV C - 2009-06-09

PDS: Rev :B STATUS:Released Printed: Sep 04, 2014

PRODUCT NUMBER	DESCRIPTION	NOTES
10125417-XXXXLF	NON-HF	SEE SHT. 3

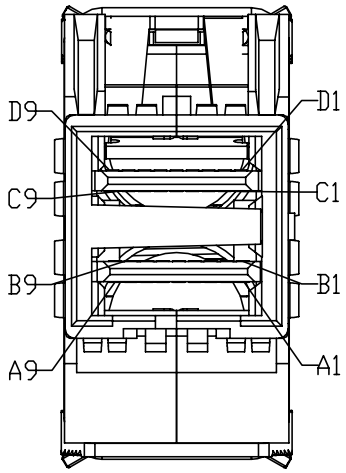

P1
VIEW A
SCALE
4:1

LEGEND:

HIGH-SPEED SERIAL DIFFERENTIAL PAIRS

SIGNAL RETURN

POWER AND MANAGEMENT INTERFACE

EEPROM CONNECTIONS

Vact = WRITE PROTECT
SCL = CLOCK SIGNAL
SDA = DATA SIGNAL
GND = GROUND

MINIMUM CABLE BEND TABLE

CABLE	("DIM Y") HF	("DIM Y") NON-HF
24 AWG	92.8	92.8
26 AWG	87.5	85.1
28 AWG	81.5	79.1
30 AWG	77.9	74.3

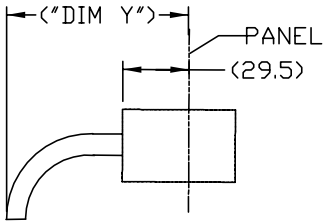

BEND RADIUS
TOP VIEW OF
CONNECTOR

WIRING LIST (SEE NOTE 6)

END P1 POSITION	END P1 SYMBOL		END P2 POSITION	END P2 SYMBOL
D9	GROUND		B9	GROUND
D8	Tx2-		B8	Rx2-
D7	Tx2+		B7	Rx2+
D6	GROUND		B6	GROUND
D5	Tx0-		B5	Rx0-
D4	Tx0+		B4	Rx0+
D3	GROUND		B3	GROUND
D2	Vman		B2	ModPrsl
D1	Vact(EEPROM)		B1	Vact
C1	SCL(EEPROM)		A1	Reserved
C2	SDA(EEPROM)		A2	Intl
C3	GROUND(EEPROM)		A3	GROUND
C4	Tx1+		A4	Rx1+
C5	Tx1-		A5	Rx1-
C6	GROUND		A6	GROUND
C7	Tx3+		A7	Rx3+
C8	Tx3-		A8	Rx3-
C9	GROUND		A9	GROUND
B9	GROUND		D9	GROUND
B8	Rx2-		D8	Tx2-
B7	Rx2+		D7	Tx2+
B6	GROUND		D6	GROUND
B5	Rx0-		D5	Tx0-
B4	Rx0+		D4	Tx0+
B3	GROUND		D3	GROUND
B2	ModPrsL		D2	Vman
B1	Vact		D1	Vact(EEPROM)
A1	Reserved		C1	SCL(EEPROM)
A2	IntL		C2	SDA(EEPROM)
A3	GROUND		C3	GROUND(EEPROM)
A4	Rx1+		C4	Tx1+
A5	Rx1-		C5	Tx1-
A6	GROUND		C6	GROUND
A7	Rx3+		C7	Tx3+
A8	Rx3-		C8	Tx3-
A9	GROUND		C9	GROUND

SHIELD ---------- SHIELD

dr	Tom Feng	2014-09-04	projection	mm	size A3	scale NTS
eng	Tom Feng	2014-09-04				
chr	Delhly Liu	2014-09-04			ecn no	SEE SHEET 1
appr	Frank Mao	2014-09-04	product family	C&A	rel level	Released

title: FINAL ASSEMBLY (PASSIVE)
MSAS HD 4X ASSEMBLY (APPLICATION UP TO 6Gb/s)

dwg no: 10125417 rev: B

www.fci.com | cat. no. - | Product - Customer Drw | sheet 2 of 5

Copyright FCI.

Pro/E File - REV C - 2009-06-09
PDS: Rev :B STATUS:Released Printed: Sep 04, 2014

PART NUMBER (NON-HALOGEN FREE) SEE NOTE 11	CUSTOMER (DELL) PART NUMBER	MFG ID	CUSTOMER REV	"DIM L" LENGTH & TOLERANCE SEE NOTE 4, (mm)	"DIM M" (mm)	AWG	Custom EEPROM
10125417-2005LF	2NY40	77821	A00	500	17.3	30	No
10125417-2010LF	D6WG0	77821	A00	1000	17.3	30	No
10125417-3020LF	M6J5Y	77821	A00	2000	17.3	28	No
10125417-3030LF	52X5M	77821	A00	3000	17.3	28	No
10125417-4050LF	V44N8	77821	A00	5000	20.1	26	No
10125417-4070LF	RGDDH	77821	A00	7000	20.1	26	No

NOTES:

1. MATERIAL:
   BACK SHELLS: ZINC ALLOY/ COPPER UNDERPLATE/ NICKEL OVERPLATE
   (B) PULL TAB: PA66
   LATCH : STAINLESS STEEL
   FERRULE: BRASS
   EMI SKIRT: STAINLESS STEEL
   LOCTITE
   PADDLE CARD: PRINTED CIRCUIT SUBSTRATE
   HEAT SHRINK TUBE: POLYOLEFIN

2. THIS PRODUCT MEETS THE RESTRICTION OF HAZARDOUS SUBSTANCES IN ELECTRICAL AND ELECTRONIC EQUIPMENT (RoHS) DIRECTIVE (2011/65/EU)

3. THIS DIMENSION IS A FINISHED PRODUCT LENGTH.

4. UNLESS OTHERWISE SPECIFIED ASSEMBLED LENGTH TOLERANCE IS TO BE:
   "DIM L" < 1 METER = ±25mm
   "DIM L" 1 METER TO 10 METERS = ± 2% OF "DIM L"

5. LABEL CONTENTS: (SEE ATTACHED DELL PPID LABEL EXAMPLE),
   LABEL USE TYPE E LABEL IN THE SAME ORIENTATION(PER DELL SPEC. 13190_A30-00_2_06_2014).
   SEE NEXT PAGE FOR DETAIL.

6. ALL CABLE ASSEMBLIES 100% TESTED FOR CONTINUITY AS DEFINED IN WIRING LIST.

7. PLACE A CABLE TIE EVERY 0.5 METER ON ALL ASSEMBLIES, UNLESS OTHERWISE SPECIFIED.
   IN CASE OF 0.5 METER CABLE ASSEMBLY, CABLE TIE IS TO BE APPLIED AT THE MIDWAY POINT.

8. OTHER TESTING PERFORMED AS REQUIRED BY PRODUCT SPECIFICATION: GS-12-651.

9. PACKAGING OF LEAD FREE PRODUCTS MEETS LABELING AND PACKAGING PER SPECIFICATION GS-14-920. PACKAGE CABLE ASSEMBLIES PER GS-14-1272.
   DUST COVERS ARE TO BE ASSEMBLED PRIOR TO PACKAGING.
   USE ONE VELCRO STRAP (BLACK) TO COIL CABE ASSEMBLY WHEN PACKING.
   CABLE ASSEMBLY SHOULD BE PLACED IN A ZIP-LOCK BAG,
   AND ATTACH DELL PPID LABEL (USE TYPE A LABEL PER DELL SPEC. 13190_A30-00_2_06_2014) TO BAG IN THE SAME ORIENTATION.(SEE NEXT PAGE FOR LABEL DETAIL INFORMATION),
   AND ATTACH DELL CARTON/BOX PPID LABEL (USE TYPE J LABEL (PER DELL SPEC. 13190_A30-00_2_06_2014)) TO CARTON/BOX IN THE SAME ORIENTATION.(SEE NEXT PAGE FOR LABEL DETAIL INFORMATION)

10. A "△" SYMBOL WILL BE NEXT TO ANY DIMENSION, VIEW, OR NOTE WHICH HAS BEEN MODIFIED WITH THE CURRENT DRAWING REVISION. THE CURRENT REVISION WILL BE SHOWN IN THE SYMBOL.

11. HALOGEN FREE RAW CABLE CAN BE USED AS A SUBSTITUTE ON NON-HF PRODUCT NUMBERS.

12. CABLE ASSEMBLY IS DESIGNED FOR APPLICATIONS UP TO 6Gb/s (MEET ELECTRICAL REQUIREMENTS OF SAS 2.1).

13. MATES TO SERIES: 10112626 or 10112627 Or 10112628

14. EEPROM INFORMATION REFER TO FCI LATEST PRODUCT SPEC. GS-12-651,
    NO CUSTOMER SPECIAL REQUIREMENT FOR EEPROM INFORMATION.

Copyright FCI.

dr	Tom Feng	2014-09-04	projection	mm	size A3	scale NTS
eng	Tom Feng	2014-09-04			ecn no	SEE SHEET 1
chr	Delhly Liu	2014-09-04			rel level	Released
appr	Frank Mao	2014-09-04	product family	C&A		

FCI	title: FINAL ASSEMBLY (PASSIVE) MSAS HD 4X ASSEMBLY (APPLICATION UP TO 6Gb/s)	dwg no 10125417	rev B
www.fci.com	cat. no. -	Product - Customer Drw	sheet 3 of 5

Pro/E File = REV C - 2009-06-09

PART NUMBER (NON-HALOGEN FREE) SEE NOTE 11	CUSTOMER (DELL) PART NUMBER	MFG ID	CUSTOMER REV	AWG	Custom EEPROM
10125417-2005LF	2NY40	77821	A00	30	No
10125417-2010LF	D6WG0	77821	A00	30	No
10125417-3020LF	M6J5Y	77821	A00	28	No
10125417-3030LF	52X5M	77821	A00	28	No
10125417-4050LF	V44N8	77821	A00	26	No
10125417-4070LF	RGDDH	77821	A00	26	No

CN-02NY40-77821-39I-0123

- SERIAL NUMBER
- DATE CODE(Year Month Day, see attached sheet)
- MANUFACTURING ID. (SEE ATTACHED SHEET)
- DELL PART NUMBER. (SEE ATTACHED SHEET,ADD ONE LEADING ZERO WHEN DELL P/N IS 5 CHARACTERS))
- COUNTRY OF ORIGIN. (CN PRESENT CHINA, US PRESENT USA)

TYPE E LABEL EXAMPLE FOR CABLE



CUSTOMER REV.(SEE ATTACHED SHEET)

1st Character present year codes

Year	2006	2007	2008	2009	2010	2011	2012	2013	AND SO ON
Code	6	7	8	9	0	1	2	3	

2nd Character present month codes

Month	Jan	Feb	Mar	Apr	May	June	July	Aug	Sep	Oct	Nov	Dec
Code	1	2	3	4	5	6	7	8	9	A	B	C

3rd Character present day codes

Day	1st	2nd	3rd	4th	5th	6th	7th	8th	9th	10th	
Code	1	2	3	4	5	6	7	8	9	A	
Day	11st	12nd	13rd	14th	15th	16th	17th	18th	19th	20th	
Code	B	C	D	E	F	G	H	I	J	K	
Day	21st	22nd	23rd	24th	25th	26th	27th	28th	29th	30th	31th
Code	L	M	N	O	P	Q	R	S	T	U	V

SERIAL NUMBER: **Suppliers** will be allowed the use of characters 0-9, A-O in the first position of the sequence number, with no restrictions on the 2nd through 4th positions provided that each sequence number is indeed unique*.

Suppliers ONLY **0 1 2 3**

1st Character	2nd Character	3rd Character	4th Character
Numbers 0 - 9 and Letters A – O	Any number* And Any letter*	Any number* And Any letter*	Any number* And Any letter*

* 2nd-4th characters will provide a unique serial number*.

TYPE A LABEL EXAMPLE FOR BAG

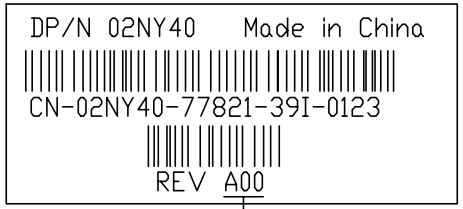

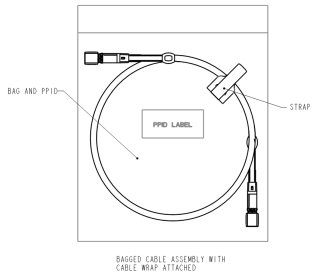

CUSTOMER REV.(SEE ATTACHED SHEET)

dr	Tom Feng	2014-09-04	projection	mm	size A3 / scale NTS
eng	Tom Feng	2014-09-04			
chr	Delhly Liu	2014-09-04			ecn no: SEE SHEET 1
appr	Frank Mao	2014-09-04	product family: C&A		rel level: Released

FCI	title: FINAL ASSEMBLY (PASSIVE) MSAS HD 4X ASSEMBLY (APPLICATION UP TO 6Gb/s)	dwg no: 10125417	rev: B
www.fci.com	cat. no. –	Product - Customer Drw	sheet 4 of 5

Copyright FCI.

Pro/E File = REV C - 2009-06-09

PDS: Rev :B STATUS:Released Printed: Sep 04, 2014

PART NUMBER (NON-HALOGEN FREE) SEE NOTE 11	CUSTOMER (DELL) PART NUMBER	MFG ID	CUSTOMER REV	AWG	Custom EEPROM
10125417-2005LF	2NY40	77821	A00	30	No
10125417-2010LF	D6WG0	77821	A00	30	No
10125417-3020LF	M6J5Y	77821	A00	28	No
10125417-3030LF	52X5M	77821	A00	28	No
10125417-4050LF	V44N8	77821	A00	26	No
10125417-4070LF	RGDDH	77821	A00	26	No

TYPE J LABEL EXAMPLE ON CARTON/BOX,

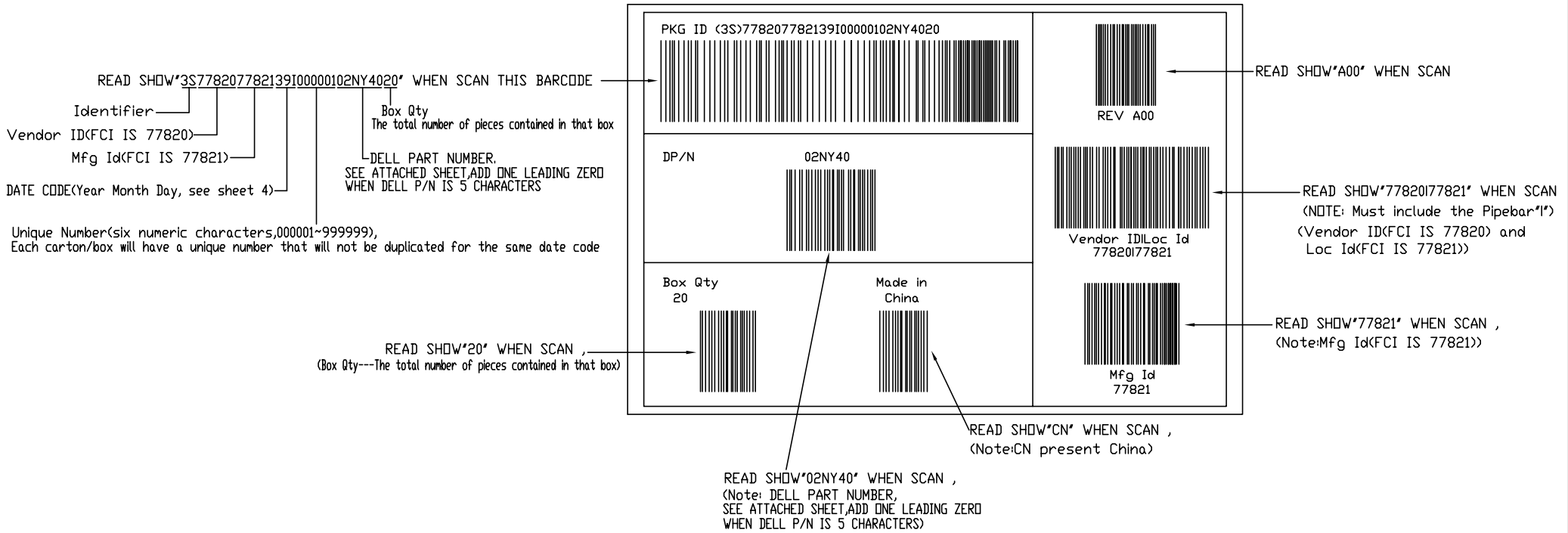

Copyright FCI.

dr	Tom Feng	2014-09-04	projection	mm	size A3	scale NTS
eng	Tom Feng	2014-09-04			ecn no	SEE SHEET 1
chr	Delhly Liu	2014-09-04			rel level	Released
appr	Frank Mao	2014-09-04	product family	C&A		

www.fci.com	title: FINAL ASSEMBLY (PASSIVE) MSAS HD 4X ASSEMBLY (APPLICATION UP TO 6Gb/s)	dwg no 10125417	rev B
	cat. no. -	Product - Customer Drw	sheet 5 of 5

Pro/E File = REV C - 2009-06-09