PRODUCT NUMBER

5 3 6 1 2 - X X X - X X X X

PLATING
S=15μ"[0.38μm]GOLD ON CONTACT AREA 150μ"[3.81μm]TIN/LEAD ON TAIL
G=30μ"[0.76μm]GOLD ON CONTACT AREA 150μ"[3.81μm]TIN/LEAD ON TAIL

TAIL LENGTH
1=.085/2.16
2=.112/2.84
4=.120/3.05
6=.150/3.81
7=.675/17.15
8= SMT

POLARIZATION
NOTE 9

RETENTION
R= RETENTION LEG
NOTE 5

DASH NO.	POSITIONS	HEADER STYLE
10	2 X 5	A
14	2 X 7	C
16	2 X 8	D
20	2 X 10	D
26	2 X 13	D
34	2 X 17	D
40	2 X 20	D
50	2 X 25	D

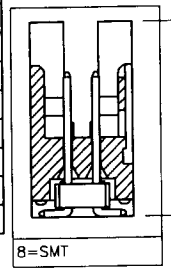

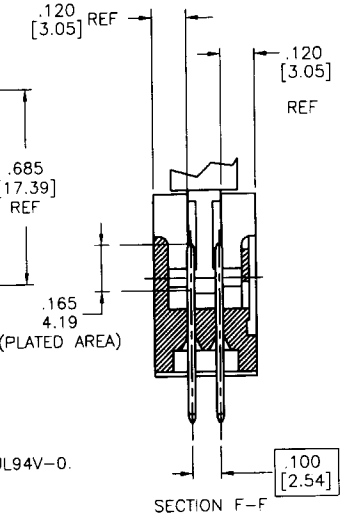

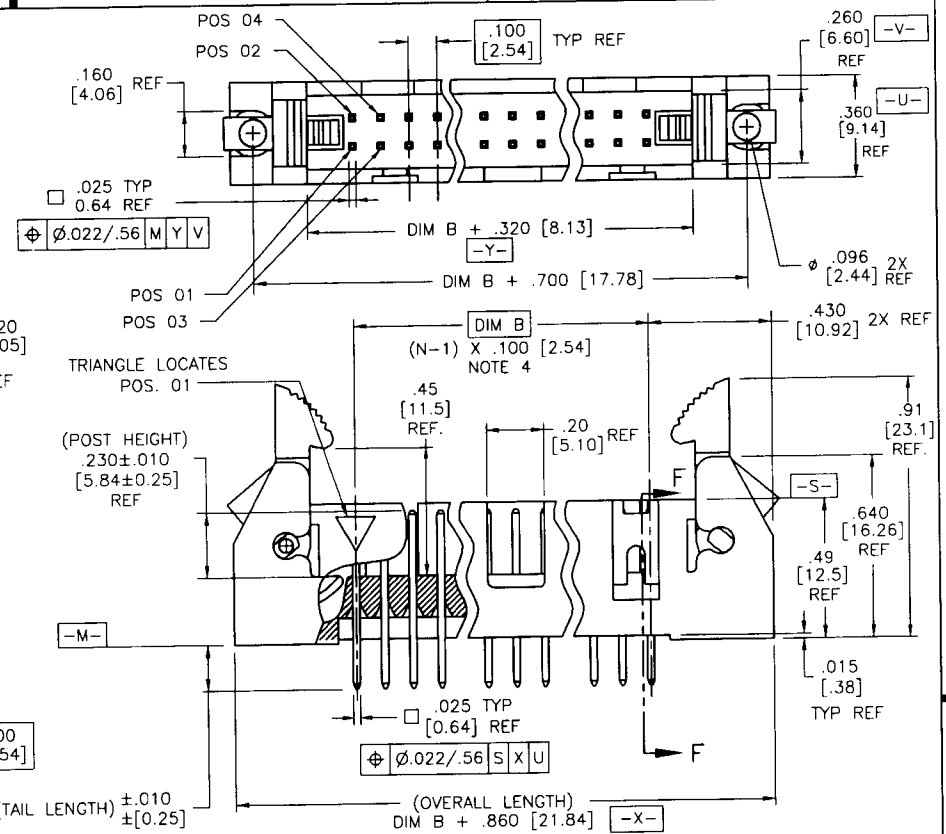

NOTES:

1. HOUSING MAT'L: HIGH TEMPERTURE THERMOPLASTIC. UL94V-0.
   COLOR : BLACK
2. PIN MATERIAL: PHOSPHOR-BRONZE
3. 3 LBS/1.36 KG MIN. RETENTION.
4. TO DETERMINE DIMENSION:
   N = NUMBER OF POSITIONS.
   EXAMPLE: 10 POS., (N-1) x .100[2.54]=.900[22.87]
5. RETENTIVE LEG:
   RETENTIVE LEG APPLICABLE TO TAIL LENGTH .120/3.05 ONLY.
   RETENTION IS APPLIED TO FOUR PINS ON PART SIZES OF 2x14 AND SMALLER, AND APPLIED TO EIGHT PINS ON PARTS SIZES OF 2x15 AND LARGER.
   5LB/2.3KG MAX INSERTION FORCE AND .25LB./1KG MIN RETENTION FORCE PER RETENTIVE PIN USING .062/1.57 THICK CIRCUIT BOARD AND RECOMMENDED HOLE PATTERN. RETENTIVE LOCATION AT THE DISCRETION OF THE MANUFACTURER.
   OMIT FROM PRODUCT NUMBER IF THIS FEATURE IS NOT APPLICABLE.
6. PACKAGED IN TRAYS.
8. UNDERPLATING: 50μ"/1.27μm Ni.
9. FOR POLARIZATION, SPECIFY POSITION NUMBER (i.e.. 03= PIN 3) TO OMIT PIN.
   OMIT FROM PRODUCT NUMBER IF THIS FEATURE IS NOT APPLICABLE.

HEADER STYLE (LATCHES NOT SHOWN)

2x5 STYLE A — 2x7 STYLE C — 2 X 8 & LARGER STYLE D

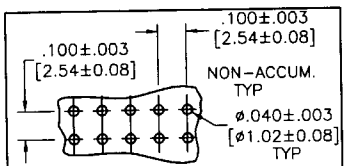

RECOMMENDED HOLE PATTERN

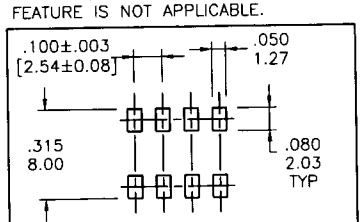

RECOMMENDED HOLE PATTERN-SMT

mat'l. code NOTE 1				tolerances unless otherwise specified		
ltr	ecn no	dr	date		.XX ±.01/.3	
A	V92810	DAI	08/24/99	linear	.XXX ±.005/0.13	
B	V94314	DAI	11/3/99		.XXXX ±.0020/0.051	
C	V01356	MEM	6/7/00	angles	0° ±2°	
D	V01862	MEM	7/26/00	dr	D.INGRAM	07/12/99
E	V02309	MEM	9/11/00	engr	L.GREEN	07/21/99
F	C10004	MDF	2/26/01	chr	L.GREEN	07/21/99
				appd	L.GREEN	07/21/99
sheet index	revision	F				
	sheet	1				

CUSTOMER COPY

projection

INCH/MM

scale 1:1

FCI Electronics www.fciconnect.com

title .100/2.54cc EJECT LATCH SHROUDED VERTICAL HEADER

product family QUICKIE

size A | dwg no 53612 | code – | sheet 1 of 1

cage code 22526

ACAD

PDM: Rev:F STATUS: Released Printed: Aug 02, 2002

Tous droits strictement reservés. Reproduction ou communication a des tiers interdite sous quelque forme que ce soit sans autorisation ecrite du propietaire. Propriete de c FCI. Droits de reproduction FCI.

All rights strictly reserved. Reproduction or issue to third parties in any form whatever is not permitted without written authority from the proprietor. Property of FCI. Copyright FCI.