3.2 x 1.5mm Auto Grade Tuning Fork

K13A
(former FXA135)
DATASHEET

STANDARD SPECIFICATIONS	
PARAMETERS	**MAX** (unless otherwise noted)
Frequency	32.768 kHz
Frequency Tolerance @ 25ºC	(See options on page 2.)
Frequency Stability (Temperature Coefficient)	-0.04 PPM / (ΔºC)²
Temperature Range Turnover (T_O) Operating (T_{OPR}) Storage (T_{STG})	 +20ºC ~ +30ºC -40°C ~ +125°C -55ºC ~ +125ºC
Equivalent Series Resistance (R_S)	70 kΩ
Load Capacitance (C_L)	(See options on page 2.)
Insulation Resistance @ 100VDC	500MΩ Min
Drive Level	1.0uW 0.1uW Typ
Aging per year @ 25°C (first year)	±3 PPM
Maximum Soldering Temp / Time	260ºC / 10 Seconds
Moisture Sensitivity Level (MSL)	1
Termination Finish	Au over Ni
Seal Method	Seam
Lead (Pb) Free	Yes
RoHS/Reach Compliant	Yes

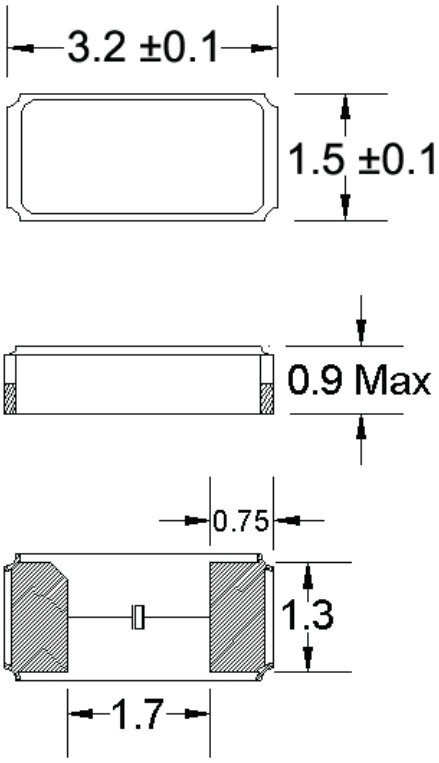

Temperature Coefficient

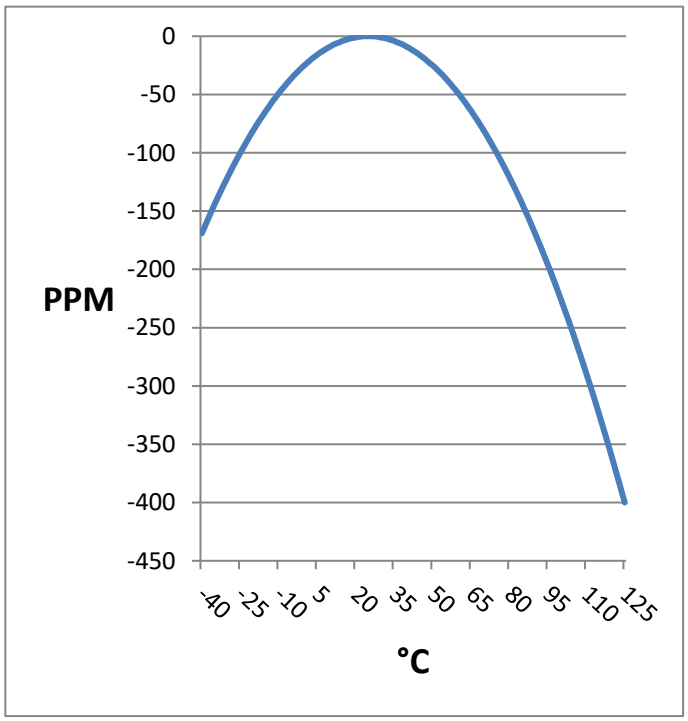

Recommended Solder Pad Layout

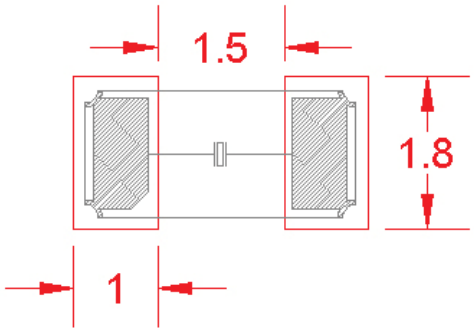

Note: Dimensional drawing is for reference to critical specifications defined by size measurements. Certain non-critical visual attributes, such as side castellations, etc. may vary.

© Copyright 2019 Fox Electronics. All rights reserved

Title / Description: K13A STANDARD SPECIFICATIONS		
Drawing Number: K13A-DOC-1		**Size:** A
Part Number:		**Cage:** 61429
Draftsperson: BEC	**Approved:** MAJ	**Revision Date:** 04/25/2019

3.2 x 1.5mm Auto Grade Tuning Fork

K13A

(former FXA135)

DATASHEET

• TAPE SPECIFICATIONS (millimeters)						
A	B	C	D	E	F	Reel QTY
∅1.5	4.0	4.0	5.5	12.0	1.0	-T3 = 3,000

• REEL SPECIFICATIONS (millimeters)						
G	H	I	J	K	L	M
2.0	∅13	∅21	∅60	∅180	13.0	1.2

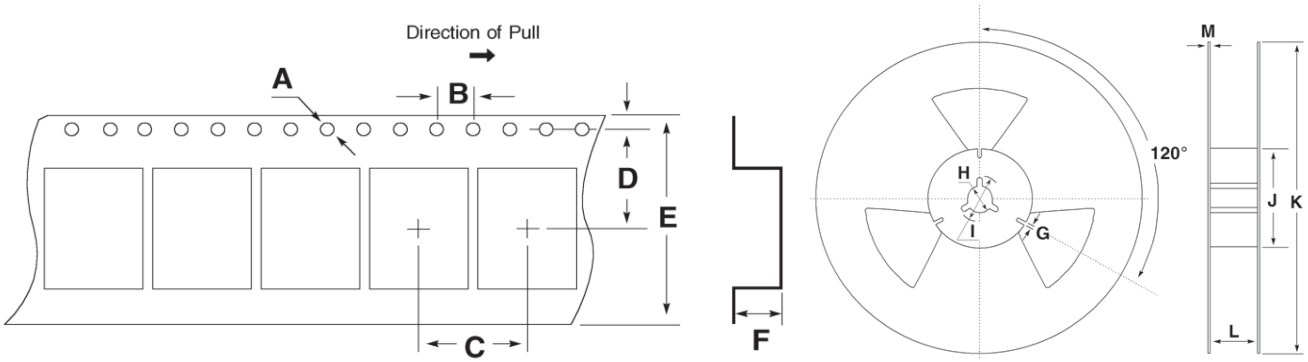

Available Options & Part Identification for SMD Tuning Fork Crystal K13A

F K13A E I H I 0.032768

F	K13A	E	I	H	I	0.032768
FOX	**Model Number**	**Tolerance** **E = ±20ppm** H = ±10ppm	**Stability** **I =-0.04 PPM / (ΔºC)²**	**Load Capacitance** B = 6pF V = 7pF D = 8pF W = 9pF **H = 12.5pF**	**Operating Temperature** **I = -40 ~ +125 °C**	**Frequency (MHz)**

Corporate Headquarters
5570 Enterprise Parkway
Fort Myers, FL 33905
http://www.FOXONLINE.com

Sales
1-888-GET-2-FOX (1-888-438-2369) or
1-239-693-0099
http://www.FOXONLINE.com/repdisty

Tech Support
http://www.FOXONLINE.com/email

PRODUCT USE: Fox Electronics reserves the right to modify the products and/or specifications described herein at any time and at Fox Electronics' sole discretion. All information in this document, including descriptions of product features and performance, is subject to change without notice. Performance specifications and the operating parameters of the described products are determined in the independent state and are not guaranteed to perform the same way when installed in customer products. The information contained herein is provided without representation or warranty of any kind, whether express or implied, including, but not limited to, the suitability of Fox Electronics' products for any particular purpose, an implied warranty of merchantability, or non-infringement of the intellectual property rights of others. This document is presented only as a guide and does not convey any license under intellectual property rights of Fox Electronics or any third parties.
Fox Electronics' products are not intended for use in applications involving extreme environmental conditions or in life support systems or similar devices where the failure or malfunction of a Fox Electronics product can be reasonably expected to significantly affect the health or safety of users. Anyone using a Fox Electronics product in such a manner does so at their own risk, absent an express, written agreement by Fox Electronics.
Fox Electronics and the Fox logo are registered trademarks of Fox Electronics. Product specification is subject to change without notice. Other trademarks and service marks used herein, including protected names, logos and designs, are the property of Fox Electronics or their respective third party owners.
For datasheet type definitions and a glossary of common terms, visit http://www.foxonline.com/tgcrystals.html.

© Copyright 2019 Fox Electronics. All rights reserved

Title / Description: K13A STANDARD SPECIFICATIONS			
Drawing Number: K13A-DOC-1		**Size:** A	
Part Number:		**Cage:** 61429	
Draftsperson: BEC	**Approved:** MAJ	**Revision Date:** 04/25/2019	

Crystal Unit Handling Precautions

1) Mounting Precautions

• If the board is deformed, such as bending after mounting, peeling of the soldered joint between the crystal resonator and board may occur producing a crack in the ceramic package, leading to loss of vacuum, destruction of the internal element, etc. Especially when depaneling the board on which it is mounted, there is a possibility that a large stress may be applied, please consider board layout and cutting method to minimize stress on products.

• When the product is automatically mounted on the board, if a large impact is applied to the crystal resonator, there is a possibility that characteristics may change / deteriorate, or the product may be broken. When mounting automatically, please set conditions considering the shock to the crystal unit. Also, please conduct the mounting test beforehand and confirm that there is no influence on the characteristics to the crystal resonator.

• Cracks may occur in the soldered part by repeated harsh temperature changes for a long time when mounting due to the board having a expansion coefficient different from that of the ceramics used in the crystal package. When using under such circumstances, please conduct test beforehand and confirm that there is no influence on the crystal unit.

• Ceramic packages are small and thin products. So, if/when you rework after mounting, please give consideration to the selection and handling of the tools to be used.

2) Soldering

Following is typical SMD Pb-free reflow profile for soldering:

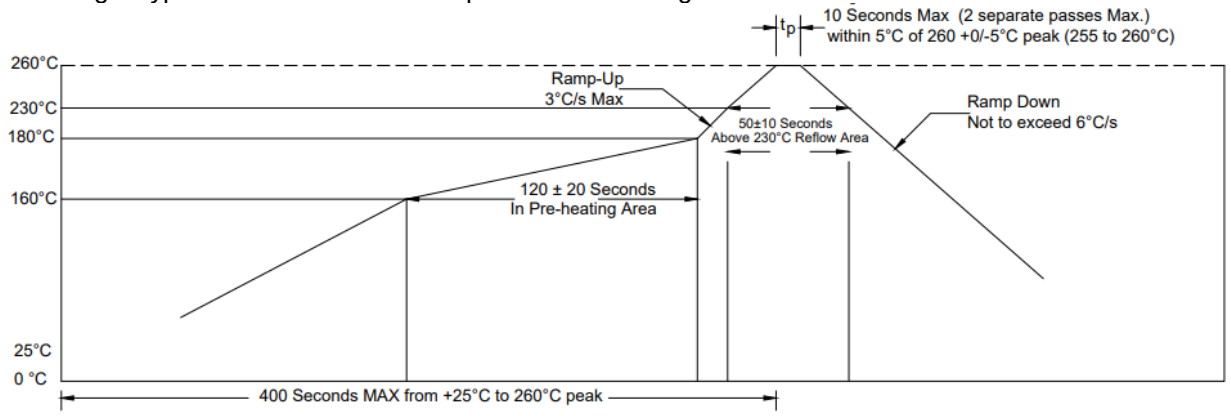

Excessive heating time at high temperature may result in deterioration of the characteristics and may break the crystal unit. For manual rework, heat the lead part at 300℃ or lower for 5 seconds or less.

3) Cleaning

Since a small, thin crystal chip is used for tuning fork crystal units and the frequency approximates that of an ultrasonic cleaner, the crystal chip may break easily. Therefore, DO NOT perform ultrasonic cleaning.

© Copyright 2019 Fox Electronics. All rights reserved