July 2016

FL77944
Analog/PWM/Phase-cut Dimmable High Power LED Direct AC Driver

Features

- The simplest Direct AC LED Driver with Only Two External RC Passive Component
- Wide AC Input Range: 90~305 V_{AC}
- Four Integrated High-Voltage LED Constant Current Sinks of up to 150 mA (RMS) Capability
- TRIAC Dimmable (Leading/Trailing Edge)
- Rheostat Dimmable
- Analog/Digital PWM Dimming Function
- High Power Factor (above 0.98 typically)
- Adjustable LED Power with an External Current Sense Resistor
- Low Harmonic Content (THD under 20% typically)
- SOIC-16 EP Package
- Flexible LED Forward Voltage Configuration
- Power Scalability with Multiple Driver ICs
- Over-Temperature Protection (OTP)

Applications

- General LED Driving Solution for Residential, Commercial and Industrial Lighting

Description

The FL77944 is a direct AC line LED driver with a minimal number of external RC passive components. In normal configuration, one resistor is to adjust LED power, and one capacitor is to provide a stable voltage to an internal biasing shunt regulator.

The FL77944 provides phase-cut dimming with wide dimming range, smooth dimming control and good dimmer compatibility. It achieves high efficiency with high PF and low THD, which makes the FL77944 suitable for high-efficiency LED lighting systems. The FL77944 has a dedicated DIM pin which can be used with analog or digital PWM dimming. The FL77944 can also be used with a rheostat dimmer switch which is suitable for desktop or indoor lamps.

Operation of FL77944 admits driving higher-wattage systems, such as street lights and down lights, by simply parallel connecting the driver ICs.

Ordering Information

Part Number	Operating Temperature Range	Package	Packing Method
FL77944MX	-40 to 125°C	16-Lead, Small Outline Integrated Circuit (SOIC) Exposed Dap 150” Narrow Body	2,500 per Reel

© 2016 Fairchild Semiconductor Corporation

Typical Applications

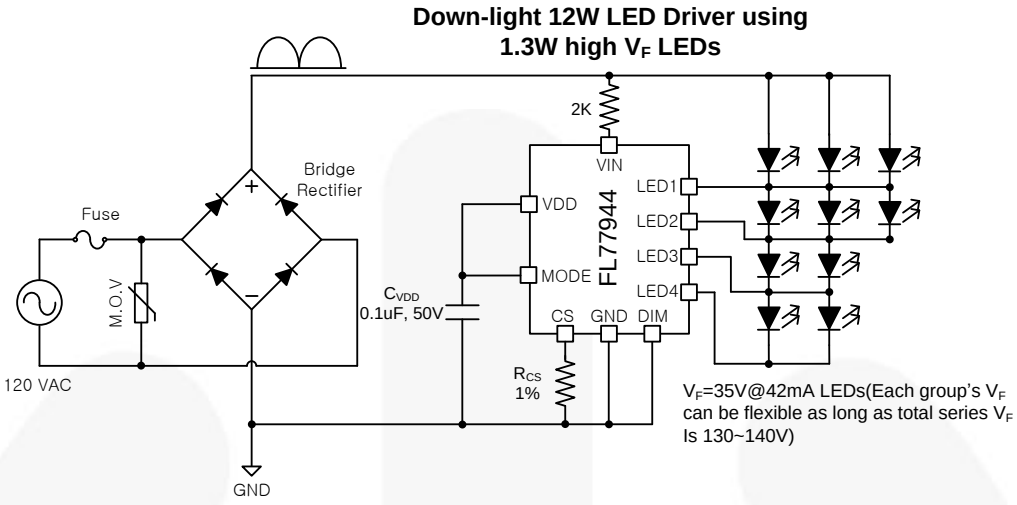

Figure 1. 12 W at 120 V_{AC} LED Down-Light Application

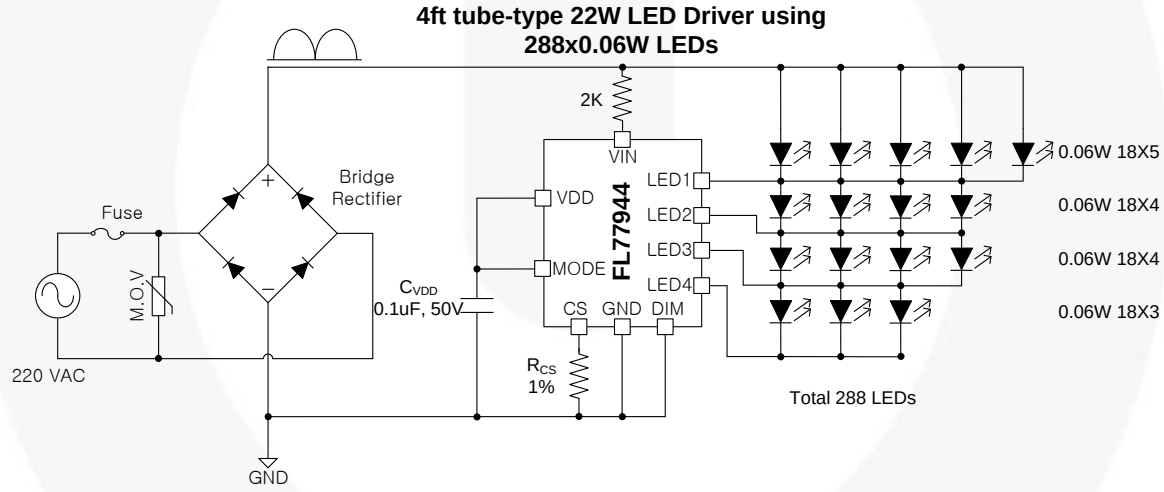

Figure 2. 22 W at 220 V_{AC} LED Tube-Type Application

Pin Configuration

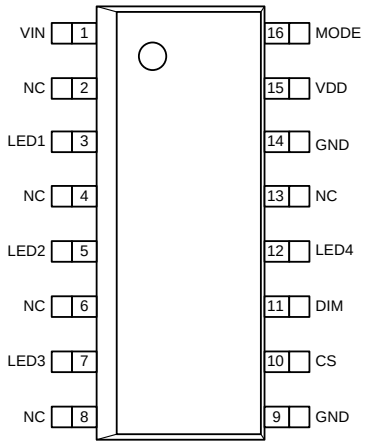

Figure 3. SOIC-16 EP (Top View)

Thermal Characteristics [1] [2]

Component	Package	Θ_{JA} (1S PCB)	Θ_{JA} (2S2P PCB)	Unit
FL77944MX	16-Pin Small-Outline Integrated Circuit (SOIC-EP)	102	24	°C/W

Notes:

1. Θ_{JA}: Thermal resistance between junction and ambient, dependent on the PCB design, heat sinking, and airflow. The value given is for natural convection with no heatsink using the 1S and 2S2P board, as specified in JEDEC standards JESD51-2, JESD51-5, and JESD51-7, as appropriate.
2. Junction-to-air thermal resistance is highly dependent on application and PCB layout. In application where the device dissipates high levels of power during operation, special care of thermal dissipation issues in PCB design must be taken.

Pin Definitions

Pin#	Name	Description
1	VIN	**Rectified AC Input Voltage**. Connect this pin to rectified AC voltage after a bridge rectifier.
3	LED1	**LED String Cathodes**. Connect cathode(s) of each LED group to these pins.
5	LED2	
7	LED3	
12	LED4	
9, 14	GND	**Ground Reference Pin**. Tie this pin directly to local ground plane. This ground should not be tied to earth ground because it is not isolated from AC mains.
10	CS	**LED Current Sensing Pin**. Limits the LED current depending on voltage across sensing resistor. The CS pin is used to set the LED current regulation target.
11	DIM	**Dimming Signal Input Pin**. When MODE pin is tied to GND, this pin is used to further adjust LED current, based on given R_{CS} value. Apply 0 V to 5 V as the DIM signal. Both analog and digital PWM signal can be used.
15	VDD	**Internal Biasing Shunt regulator Output**. Voltage on this pin supplies internal circuitry of FL77944. A 17-V shunt regulator is internally connected to this pin. A bypassing capacitor is recommended to be added to reduce noise from VIN.
16	MODE	**Mode Pin**. Connect this pin to VDD to disable DIM pin. Connect this pin to GND to enable DIM-pin functionality.
0	EP	**Exposed Thermal Pad**. EP is not tied to GND inside the IC. It is recommended to tie it to GND externally.

© 2016 Fairchild Semiconductor Corporation

Block Diagram

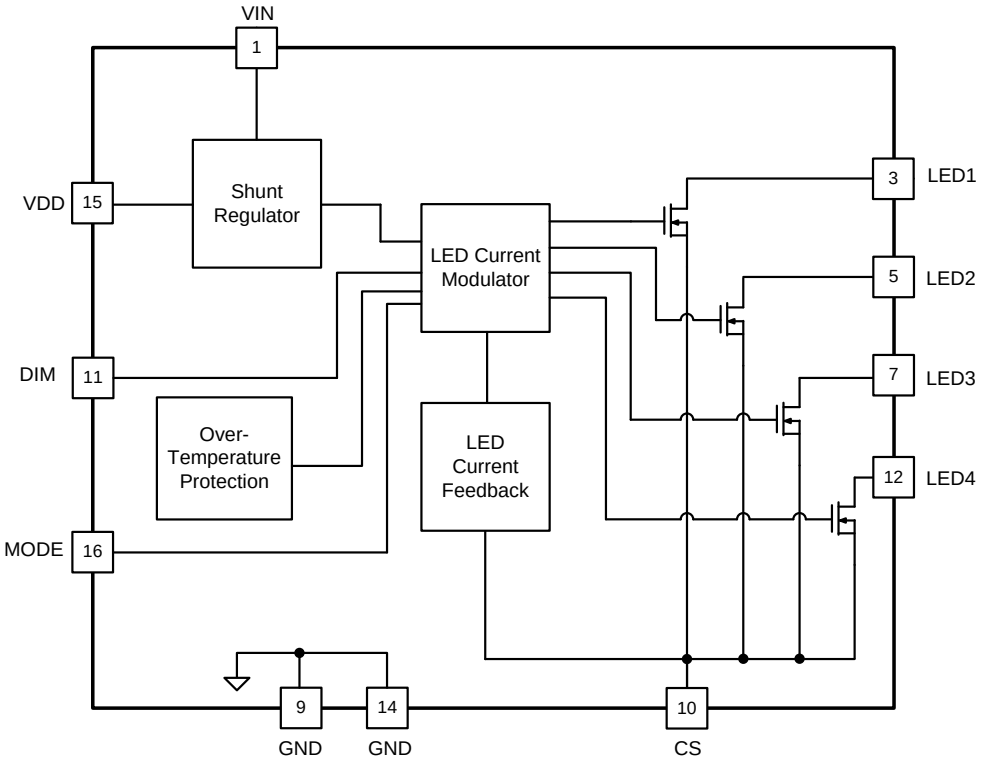

Figure 4. Simplified Block Diagram

Absolute Maximum Ratings

Stresses exceeding the absolute maximum ratings may damage the device. The device may not function or be operable above the recommended operating conditions and stressing the parts to these levels is not recommended. In addition, extended exposure to stresses above the recommended operating conditions may affect device reliability. The absolute maximum ratings are stress ratings only.

Symbol	Parameter	Min.	Max.	Unit
V_{IN}	VIN Voltage	-0.3	500.0	V
V_{LED1}	LED1 Pin Voltage	-0.3	500.0	V
V_{LED2}	LED2 Pin Voltage	-0.3	500.0	V
V_{LED3}	LED3 Pin Voltage	-0.3	500.0	V
V_{LED4}	LED4 Pin Voltage	-0.3	200.0	V
V_{CS}	CS Pin Voltage	-0.3	6.0	V
V_{DIM}	DIM Pin Voltage	-0.3	6.0	V
T_J	Junction Temperature	-55	+150	ºC
T_{STG}	Storage Temperature	-65	+150	ºC
I_{LED1}	LED1 Current		80	mA
I_{LED2}	LED2 Current		160	mA
I_{LED3}	LED3 Current		160	mA
I_{LED4}	LED4 Current		240	mA

Notes:

3. Stress beyond those listed under Absolute Maximum Ratings may cause permanent damage to the device.
4. All voltage values, except differential voltages, are given with respect to the GND pin.
5. Human Body Model, ANSI/ESDA/JEDEC JS-001-2012: 0.9 kV at Pins 1, 3, 5, 7; 0.4 kV at Pin 12; 1.0 kV at Pins 10, 11, 15, 16.
6. Charged Device Model, JESD22-C101: 1.0 kV at all pins.

Recommended Operating Conditions

The Recommended Operating Conditions table defines the conditions for actual device operation. Recommended operating conditions are specified to ensure optimal performance to the datasheet specifications. Fairchild does not recommend exceeding them or designing to Absolute Maximum Ratings.

Symbol	Parameter	Min.	Max.	Unit
T_j	Operating Junction Temperature	-40	+125	°C

© 2016 Fairchild Semiconductor Corporation

Electrical Characteristics

Unless otherwise noted, R_{CS} = 10 Ω (1%), T_A = 25°C. Currents are defined as positive into the device and negative out of the device.

Symbol	Parameter	Conditions	Min.	Typ.	Max.	Unit
VIN Supply						
$I_{QUIES.VIN}$	VIN Quiescent Current	V_{IN} = 20 to 500 V		1.2	1.5	mA
VDD Output						
V_{DD}	VDD Voltage	V_{IN} = 20.0 V	15.5	16.8	18	V
LED Current						
I_{LED1}	LED1 Current	V_{IN} = 20.0 V, V_{LED1} = 20.0 V	9.0	16.9	21.0	mA
I_{LED2}	LED2 Current	V_{IN} = 20.0 V, V_{LED2} = 20.0 V	31.0	36.1	41.2	mA
I_{LED3}	LED3 Current	V_{IN} = 20.0 V, V_{LED3} = 35.0 V	77.0	82.8	88.6	mA
I_{LED4}	LED4 Current	V_{IN} = 20.0 V, V_{LED4} = 20.0 V	85.7	91.7	97.7	mA
Over-Temperature Protection						
T_{OTP}	OTP Temperature[7]			170		°C
Leakage Current						
$I_{LED1-LK}$	LED1 Leakage Current	V_{LED1} = 500 V, V_{IN} = 0 V			1	µA
$I_{LED2-LK}$	LED2 Leakage Current	V_{LED2} = 500 V, V_{IN} = 0 V			1	µA
$I_{LED3-LK}$	LED3 Leakage Current	V_{LED3} = 500 V, V_{IN} = 0 V			1	µA
$I_{LED4-LK}$	LED4 Leakage Current	V_{LED4} = 200 V, V_{IN} = 0 V			1	µA

Note:

7. Not tested in production. Internal over-temperature protection circuitry protects the device from permanent damage. LEDs shut down at the junction temperature of T_J=170°C (typical).

© 2016 Fairchild Semiconductor Corporation

Typical Performance Characteristics

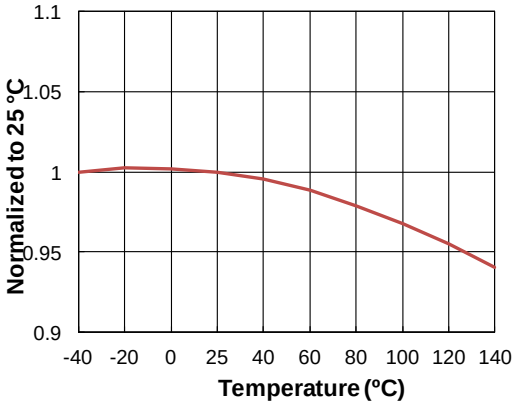

Figure 5. $I_{QUIES.VIN}$ vs. Temperature

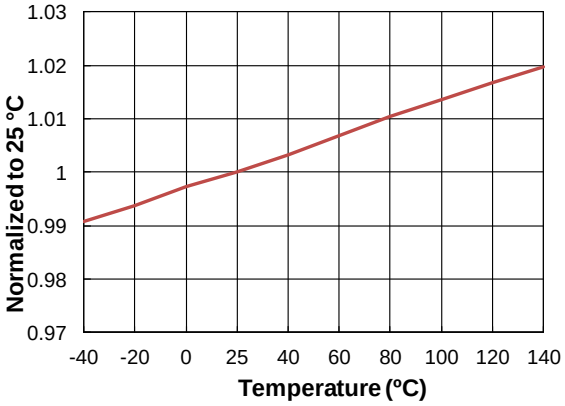

Figure 6. V_{DD} vs. Temperature

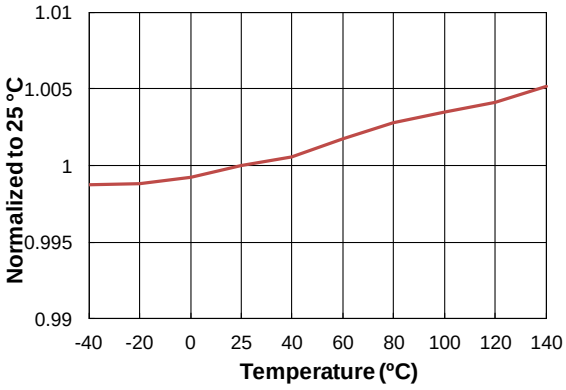

Figure 7. I_{LED1} vs. Temperature

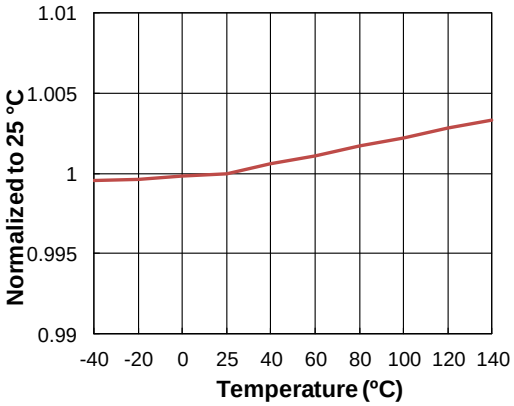

Figure 8. I_{LED2} vs. Temperature

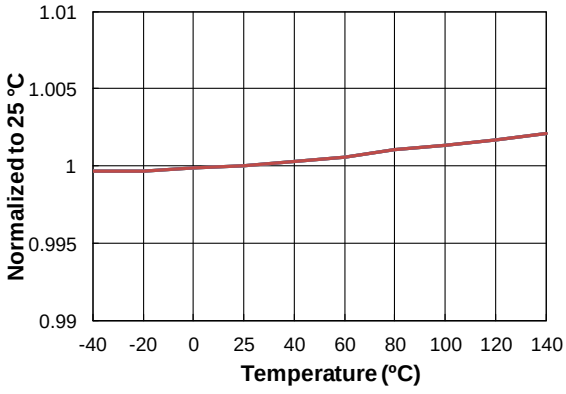

Figure 9. I_{LED3} vs. Temperature

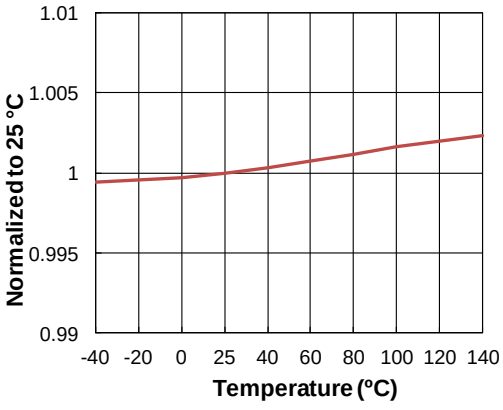

Figure 10. I_{LED4} vs. Temperature

Functional Description

The FL77944 can drive LED strings attached directly to the rectified AC mains using only two external RC components (R_{CS} and C_{VDD}). With 4 integrated high voltage current sink, LED current in each string is precisely controlled with system compactness. High PF and low THD are obtained by the optimized current sink levels. Phase-cut dimming is easily obtained with wide dimming range and good dimmer compatibility. Dedicated DIM pin can be used to implement analog or digital dimming function. Flicker index in the direct AC drive topology can be improved by adopting proprietary self valley-fill solution.

Operation

When the rectified AC line voltage, V_{IN}, is higher than the forward voltage of the consecutive LED groups, each LED group turns on automatically as the corresponding current sink has enough voltage headroom across it. Each current sink increases up to the predefined current level and maintains that level until the following channel's current sink get enough voltage headroom across it.

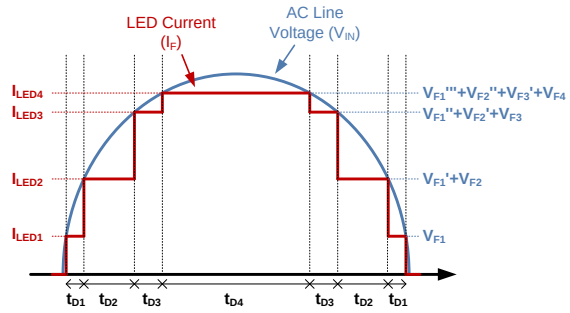

- t_{D1}: Current is directed to LED1 pin through 1st LED group.
- t_{D2}: Current is directed to LED2 pin through 1st and 2nd LED groups.
- t_{D3}: Current is directed to LED3 pin through 1st, 2nd, and 3rd LED groups.
- t_{D4}: Current is directed to LED4 pin through 1st, 2nd, 3rd, and 4th LED groups.
- $V_{F1}/V_{F1}'/V_{F1}''/V_{F1}'''$: Forward voltage at forward current of $I_{LED1}/I_{LED2}/I_{LED3}/I_{LED4}$ in 1st LED group.
- $V_{F2}/V_{F2}'/V_{F2}''$: Forward voltage at forward current of $I_{LED2}/I_{LED3}/I_{LED4}$ in 2nd LED group.
- V_{F3}/V_{F3}': Forward voltage at forward current of I_{LED3}/I_{LED4} in 3rd LED group.
- V_{F4}: Forward voltage at forward current of I_{LED4} in 4th LED group.

Figure 11. FL77944 Operation

When V_{IN} reaches to the forward voltage across the 1st LED group (V_{F1}) at forward current $I_F = I_{LED1}$, the current drawn from the V_{IN} is directed to the LED1 through the 1st LED group. In sequence, when V_{IN} reaches forward voltage across 1st and 2nd LED groups ($V_{F1}'+V_{F2}$) at $I_F = I_{LED2}$, the current is directed to LED2 across 1st and 2nd LED groups. Then, when V_{IN} reaches $V_{F1}''+V_{F2}'+V_{F3}$ at $I_F=I_{LED3}$, the LED current goes through 1st, 2nd, and 3rd LED groups and sinks to the LED3. Finally, when V_{IN} reaches $V_{F1}'''+V_{F2}''+V_{F3}'+V_{F4}$ at $I_F=I_{LED4}$, the current goes through all 4 LED groups and is directed to the LED4.

Whenever the active channel (one that is sinking LED current) is changed from one channel to the adjacent channel with respect to the change in the V_{IN}, the new active channel's current increases gradually while the existing active channel's current decreases gradually.

This smooth current transition reduces frequency harmonic contents and improves power factor as well as Electromagnetic Interference (EMI) characteristics.

By fully utilizing available headroom, the FL77944 offers maximum power, high efficiency, power factor and low harmonic distortion. Typically, power factor is higher than 0.98 and THD is lower than 20%. The efficiency heavily depends on a LED configuration.

LED Current and Power Setting

The LED current is managed by an external current sense resistor R_{CS}. Regulation target of each channel's current sink is calculated as follows.

$$I_{LED1} = \frac{0.18}{R_{CS}}, I_{LED2} = \frac{0.37}{R_{CS}},$$
$$I_{LED3} = \frac{0.83}{R_{CS}}, \text{and } I_{LED4} = \frac{0.92}{R_{CS}}. \quad (1)$$

Root-mean-square (RMS) value of the input current can be calculated using the peak regulated current, I_{LED4}, and crest factor. Since the LED current waveform is similar to the AC line voltage, the crest factor is close to the crest factor of a sine wave, $\sqrt{2}$=1.414. But the actual crest factor depends on the flattened time of the I_{LED4} and LED configuration. With FL77944, the typical crest factor approximately is 1.4. Thus, based on estimated input power, P_{IN}, the R_{CS} resistor value can be calculated as follows.

$$R_{CS} = \frac{0.92 \times V_{AC.RMS}}{1.4 \times P_{IN}} \quad (2)$$

The actual R_{CS} needs to be adjusted with respect to the LED configuration.

LED Configuration

In the LED configuration, it is required to increase the total LED forward voltage to improve efficiency. For example, compared to using 4 LEDs with V_F of 60 V (total V_F = 60 V x 4 channels = 240 V) for each LED group, using 4 LEDs with V_F equal to 65 V (total V_F = 65 V x 4 channels = 260 V) will improve the efficiency simply due to the higher total V_F. Each LED channel can have different V_F. For example, if a design is implemented with 144 pieces of 3-V LEDs for replacement of 2-feet fluorescent lamp, designer can assign flexible numbers of LEDs for LED channels such as 25s2p-32s2p-6s2p-18s1p ("s" stands for LEDs in series and "p" stands for LEDs in parallel) or 18s2p-18s2p-18s2p-36s1p.

Which needs to be considered is that V_F of first LED group should be higher than VIN-pin turn-on voltage, which is 20 V. If the V_F of the first LED group is configured to be lower than VIN-pin turn-on voltage, I_{LED1} will not have the correct regulation level when input voltage, V_{IN}, is just exceeds the V_F.

© 2016 Fairchild Semiconductor Corporation

A good starting point for choosing a LED configuration is to have about 260 V~280 V of the total V_F for 220 V_{AC} mains and 130 V~140 V of the total V_F for 120 V_{AC}.

Internal Shunt Regulator Output, VDD

The system implemented with FL77944 does not require a bulk capacitor after bridge-rectification diodes. As a result, the V_{DD}, which supplies biasing voltage for the FL77944, has voltage ripple like the rectification voltage after the bridge diodes as shown in Figure 12.

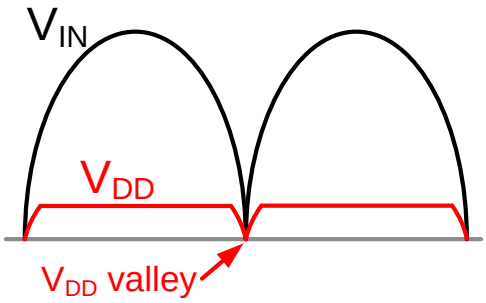

Figure 12. V_{DD} Ripple without C_{VDD}

The V_{DD} ripple can be reduced by a bypassing capacitor, C_{VDD}. If the C_{VDD} is not used, or its value is small, the V_{DD} voltage fluctuates and goes even down to 0 V. It makes the FL77944 reset, but the FL77944 automatically restarts every cycle when the AC line voltage reaches a certain level. For a much stable operation, to implement C_{VDD} is preferred. The recommended C_{VDD} value is 1 µF with 50 V of voltage rating.

Over-Temperature Protection (OTP)

The FL77944 is with over temperature protection (OTP) inherently. When the driver's junction temperature exceeds a specified threshold temperature (T_J = 170°C), the driver will shut down automatically and then recover automatically once the temperature drops lower enough than the internal threshold temperature. Without this protection, the lifetime of the FL77944 can be reduced and irreparable damage can occur when it operates above its maximum junction temperature (150°C). Good thermal management is required to achieve best performance and long life span of the FL77944.

Analog/PWM Dimming Function

The FL77944 uses the DIM pin for analog, 0 V to 10 V, or pulse width modulation (PWM) dimming by applying a voltage signal between 0 to 5 V or PWM signals with 5-V peaks to the DIM pin.

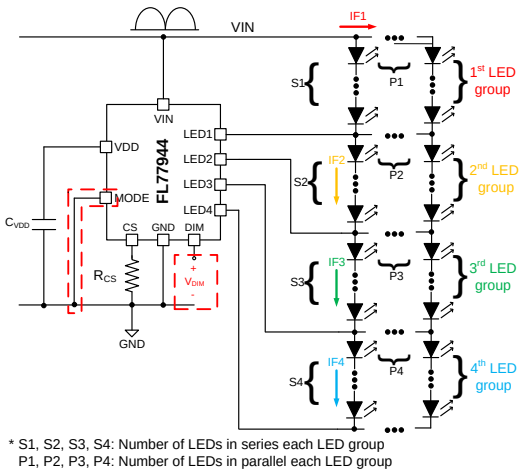

Figure 13. Analog or PWM dimming Application

To enable dimming mode, the MODE pin should be tied to GND. The LED channel sink and total RMS current through LEDs will be linearly adjusted with the V_{DIM} level as shown Figure 14 and Figure 15.

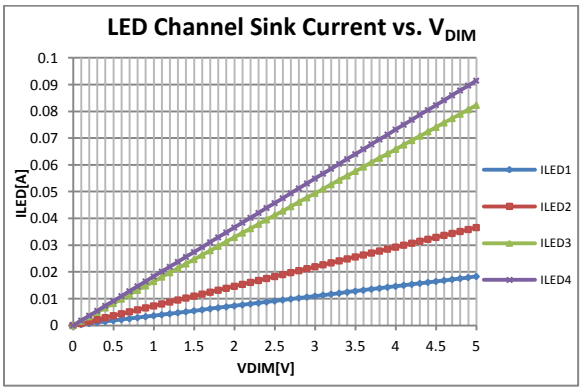

Figure 14. Measured LED Channel Sink Current vs. V_{DIM} (R_{CS} = 10 Ω)

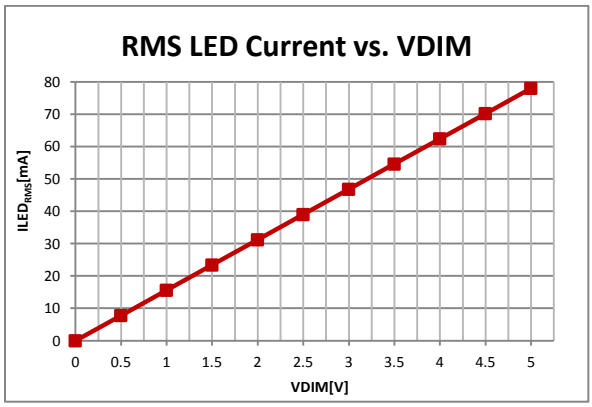

Figure 15. Current vs. V_{DIM} (Simulation results: R_{CS}=10 Ω / V_{AC} = 120 V)

© 2016 Fairchild Semiconductor Corporation

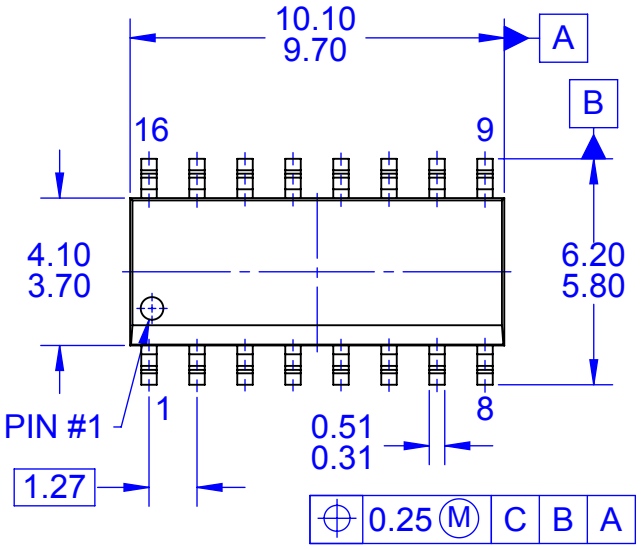

TOP VIEW

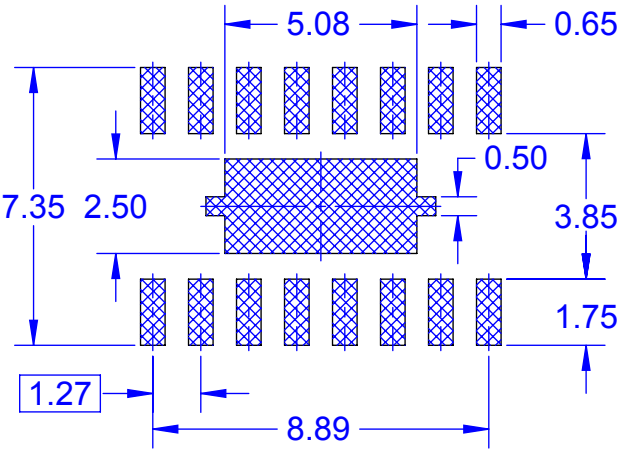

LAND PATTERN RECOMMENDATION

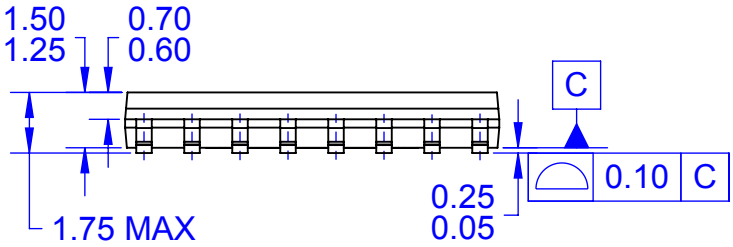

FRONT VIEW

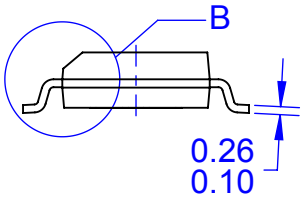

SIDE VIEW

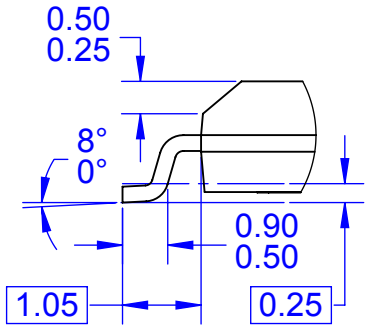

DETAIL B
SCALE 2:1

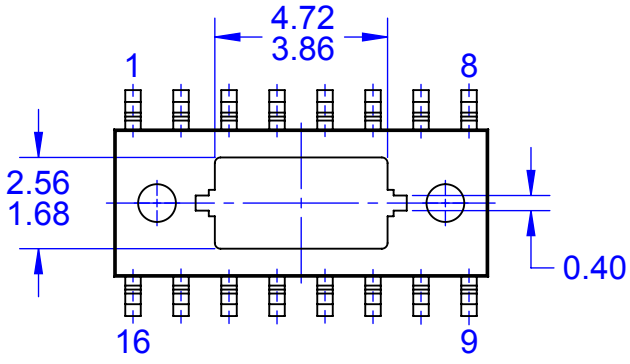

BOTTOM VIEW

NOTES:

A. NO INDUSTRY STANDARD APPLIES TO THIS PACKAGE
B. ALL DIMENSIONS ARE IN MILLIMETERS
C. DIMENSIONS DO NOT INCLUDE MOLD FLASH OR BURRS
D. DRAWING FILENAME: MKT-M16Hrev2

FAIRCHILD ™

TRADEMARKS

The following includes registered and unregistered trademarks and service marks, owned by Fairchild Semiconductor and/or its global subsidiaries, and is not intended to be an exhaustive list of all such trademarks.

AccuPower™
AttitudeEngine™
Awinda®
AX-CAP®*
BitSiC™
Build it Now™
CorePLUS™
CorePOWER™
CROSSVOLT™
CTL™
Current Transfer Logic™
DEUXPEED®
Dual Cool™
EcoSPARK®
EfficientMax™
ESBC™
Fairchild®
Fairchild Semiconductor®
FACT Quiet Series™
FACT®
FastvCore™
FETBench™
FPS™
F-PFS™
FRFET®
Global Power Resource SM
GreenBridge™
Green FPS™
Green FPS™ e-Series™
G*max*™
GTO™
IntelliMAX™
ISOPLANAR™
Making Small Speakers Sound Louder and Better™
MegaBuck™
MICROCOUPLER™
MicroFET™
MicroPak™
MicroPak2™
MillerDrive™
MotionMax™
MotionGrid®
MTi®
MTx®
MVN®
mWSaver®
OptoHiT™
OPTOLOGIC®
OPTOPLANAR®
®
Power Supply WebDesigner™
PowerTrench®
PowerXS™
Programmable Active Droop™
QFET®
QS™
Quiet Series™
RapidConfigure™
™
Saving our world, 1mW/W/kW at a time™
SignalWise™
SmartMax™
SMART START™
Solutions for Your Success™
SPM®
STEALTH™
SuperFET®
SuperSOT™-3
SuperSOT™-6
SuperSOT™-8
SupreMOS®
SyncFET™
Sync-Lock™
SYSTEM GENERAL®*
TinyBoost®
TinyBuck®
TinyCalc™
TinyLogic®
TINYOPTO™
TinyPower™
TinyPWM™
TinyWire™
TranSiC™
TriFault Detect™
TRUECURRENT®*
µSerDes™
SerDes™
UHC®
Ultra FRFET™
UniFET™
VCX™
VisualMax™
VoltagePlus™
XS™
Xsens™
仙童®

* Trademarks of System General Corporation, used under license by Fairchild Semiconductor.

DISCLAIMER

FAIRCHILD SEMICONDUCTOR RESERVES THE RIGHT TO MAKE CHANGES WITHOUT FURTHER NOTICE TO ANY PRODUCTS HEREIN TO IMPROVE RELIABILITY, FUNCTION, OR DESIGN. TO OBTAIN THE LATEST, MOST UP-TO-DATE DATASHEET AND PRODUCT INFORMATION, VISIT OUR WEBSITE AT HTTP://WWW.FAIRCHILDSEMI.COM. FAIRCHILD DOES NOT ASSUME ANY LIABILITY ARISING OUT OF THE APPLICATION OR USE OF ANY PRODUCT OR CIRCUIT DESCRIBED HEREIN; NEITHER DOES IT CONVEY ANY LICENSE UNDER ITS PATENT RIGHTS, NOR THE RIGHTS OF OTHERS. THESE SPECIFICATIONS DO NOT EXPAND THE TERMS OF FAIRCHILD'S WORLDWIDE TERMS AND CONDITIONS, SPECIFICALLY THE WARRANTY THEREIN, WHICH COVERS THESE PRODUCTS.

AUTHORIZED USE

Unless otherwise specified in this data sheet, this product is a standard commercial product and is not intended for use in applications that require extraordinary levels of quality and reliability. This product may not be used in the following applications, unless specifically approved in writing by a Fairchild officer: (1) automotive or other transportation, (2) military/aerospace, (3) any safety critical application – including life critical medical equipment – where the failure of the Fairchild product reasonably would be expected to result in personal injury, death or property damage. Customer's use of this product is subject to agreement of this Authorized Use policy. In the event of an unauthorized use of Fairchild's product, Fairchild accepts no liability in the event of product failure. In other respects, this product shall be subject to Fairchild's Worldwide Terms and Conditions of Sale, unless a separate agreement has been signed by both Parties.

ANTI-COUNTERFEITING POLICY

Fairchild Semiconductor Corporation's Anti-Counterfeiting Policy. Fairchild's Anti-Counterfeiting Policy is also stated on our external website, www.fairchildsemi.com, under Terms of Use

Counterfeiting of semiconductor parts is a growing problem in the industry. All manufacturers of semiconductor products are experiencing counterfeiting of their parts. Customers who inadvertently purchase counterfeit parts experience many problems such as loss of brand reputation, substandard performance, failed applications, and increased cost of production and manufacturing delays. Fairchild is taking strong measures to protect ourselves and our customers from the proliferation of counterfeit parts. Fairchild strongly encourages customers to purchase Fairchild parts either directly from Fairchild or from Authorized Fairchild Distributors who are listed by country on our web page cited above. Products customers buy either from Fairchild directly or from Authorized Fairchild Distributors are genuine parts, have full traceability, meet Fairchild's quality standards for handling and storage and provide access to Fairchild's full range of up-to-date technical and product information. Fairchild and our Authorized Distributors will stand behind all warranties and will appropriately address any warranty issues that may arise. Fairchild will not provide any warranty coverage or other assistance for parts bought from Unauthorized Sources. Fairchild is committed to combat this global problem and encourage our customers to do their part in stopping this practice by buying direct or from authorized distributors.

PRODUCT STATUS DEFINITIONS

Definition of Terms

Datasheet Identification	Product Status	Definition
Advance Information	Formative / In Design	Datasheet contains the design specifications for product development. Specifications may change in any manner without notice.
Preliminary	First Production	Datasheet contains preliminary data; supplementary data will be published at a later date. Fairchild Semiconductor reserves the right to make changes at any time without notice to improve design.
No Identification Needed	Full Production	Datasheet contains final specifications. Fairchild Semiconductor reserves the right to make changes at any time without notice to improve the design.
Obsolete	Not In Production	Datasheet contains specifications on a product that is discontinued by Fairchild Semiconductor. The datasheet is for reference information only.

Rev. I77