INCH-POUND

MS3114M
15 January 2015
SUPERSEDING
MS3114L
4 June 2009

DETAIL SPECIFICATION SHEET

CONNECTORS, RECEPTACLE, ELECTRICAL, SERIES 1, SOLDER TYPE, JAM NUT MOUNTING, BAYONET COUPLING, CLASSES E, F, H AND P

Inactive for new design after 10 June 1993.
For new design, use MS3474 for classes E, F, and P.

This specification is approved for use by all Departments and Agencies of the Department of Defense.

The requirements for acquiring the product described herein shall consist of this specification sheet and MIL-DTL-26482.

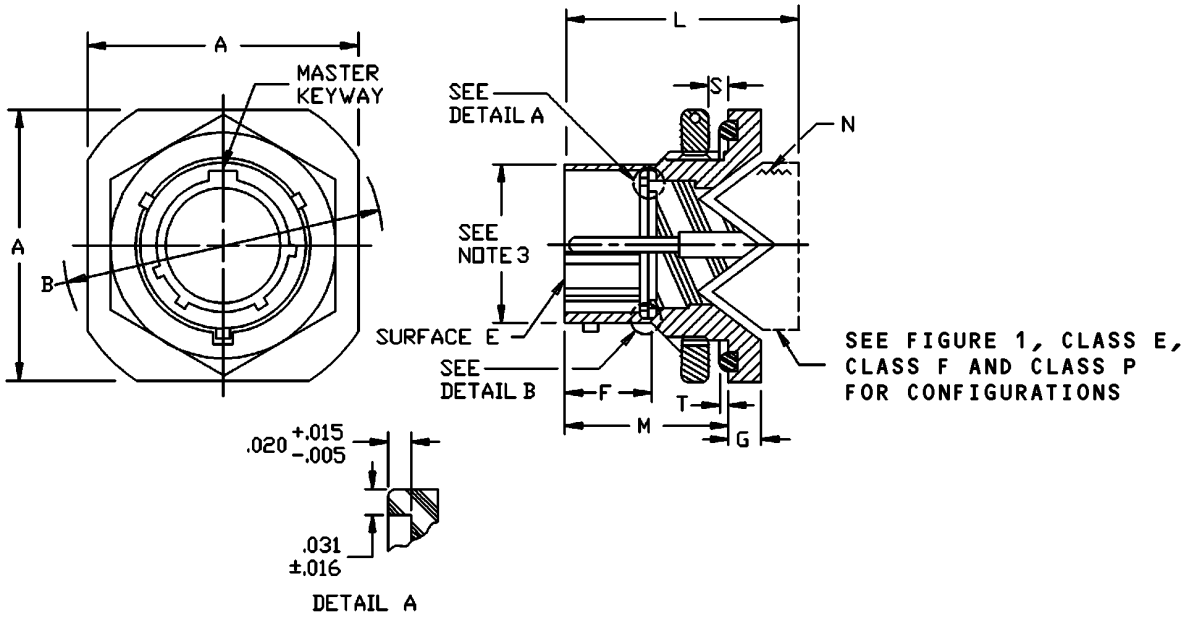

STYLE P, PIN INSERT

FIGURE 1. Dimensions and configurations for classes E, F and P.

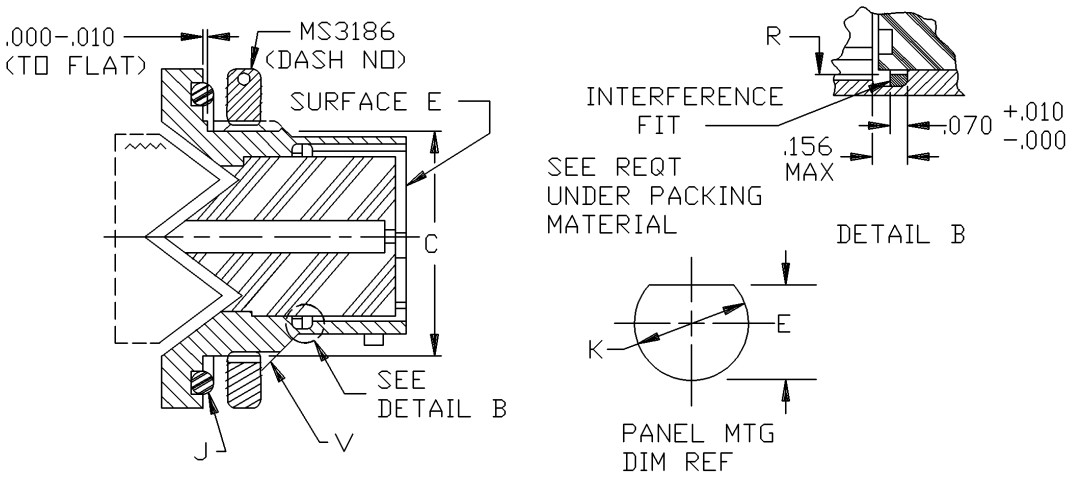

STYLE S, SOCKET INSERT

FIGURE 1. Dimensions and configurations for classes E, F and P - Continued.

Shell size	A max length	B dia +.000 -.032 across flange corner	C +.000 -.010 mtg flat	E +.010 -.005 panel flat location	F min mounting thread location	G ± .020 thick mtg flange	J O-ring seal SAE-AS29513-	K + .010 - .005 panel mounting hole
8	.954 (24.23)	1.078 (27.38)	.530 (13.46)	.540 (13.72)	.384 (9.75)	.117 (2.97)	017	.572 (14.53)
10	1.078 (27.38)	1.203 (30.56)	.655 (16.64)	.665 (16.89)			019	.697 (17.70)
12	1.266 (32.16)	1.391 (35.33)	.818 (20.78)	.828 (21.03)			022	.885 (22.48)
14	1.391 (35.33)	1.516 (38.51)	.942 (23.93)	.952 (24.18)			024	1.010 (25.65)
16	1.516 (38.51)	1.641 (41.68)	1.066 (27.08)	1.076 (27.33)			026	1.135 (28.83)
18	1.641 (41.68)	1.766 (44.86)	1.191 (30.25)	1.201 (30.51)			028	1.260 (32.00)
20	1.828 (46.43)	1.954 (49.63)	1.316 (33.43)	1.326 (33.68)	.446 (11.33)	.148 (3.76)	128	1.385 (35.18)
22	1.954 (49.63)	2.078 (52.78)	1.441 (36.60)	1.451 (36.86)			130	1.510 (38.35)
24	2.078 (52.78)	2.203 (55.96)	1.566 (39.78)	1.576 (40.03)	.479 (12.17)		132	1.635 (41.53)

FIGURE 1. Dimensions and configurations for classes E, F and P - Continued.

Shell size	M +.031 -.000 mounting flange location	N UNEF-2B accessory thread	R max ID gasket	S panel thick ref		T ± .011 O-ring projection	V UNEF-2A mounting thread
				min	max		
8	.691 (17.55)	.625-24	.329 (8.36)	.062 (1.57)	.125 (3.18)	.023 (0.58)	.5625-24
10		.750-20	.457 (11.61)				.6875-24
12		.875-20	.564 (14.33)				.875-20
14		1.000-20	.689 (17.50)				1.000-20
16		1.125-18	.814 (20.68)				1.125-18
18		1.250-18	.907 (23.04)				1.250-18
20	.879 (22.33)	1.375-18	1.039 (26.39)		.250 (6.35)	.028 (0.71)	1.375-18
22		1.500-18	1.164 (29.57)				1.500-18
24	.912 (23.16)	1.625-18	1.289 (32.74)				1.625-18

FIGURE 1. Dimensions and configurations for classes E, F and P - Continued.

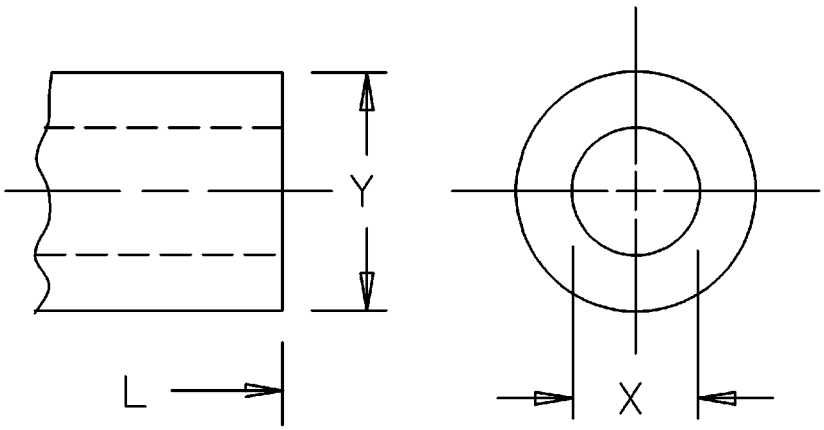

CLASS E

DIMENSIONS FOR CLASS E

Shell size	L max overall length	X dia min ID	Y dia max OD
8	1.344 (34.14)	.269 (6.83)	.750 (19.05)
10		.359 (9.12)	.875 (22.23)
12		.469 (11.91)	1.000 (25.40)
14		.589 (14.96)	1.125 (28.58)
16		.717 (18.21)	1.250 (31.75)
18		.779 (19.79)	1.375 (34.93)
20	1.594 (40.49)	.901 (22.89)	1.531 (38.89)
22		1.009 (25.63)	1.656 (42.06)
24	1.641 (41.68)	1.123 (28.52)	1.781 (45.24)

FIGURE 1. Dimensions and configurations for classes E, F and P - Continued.

CLASS F

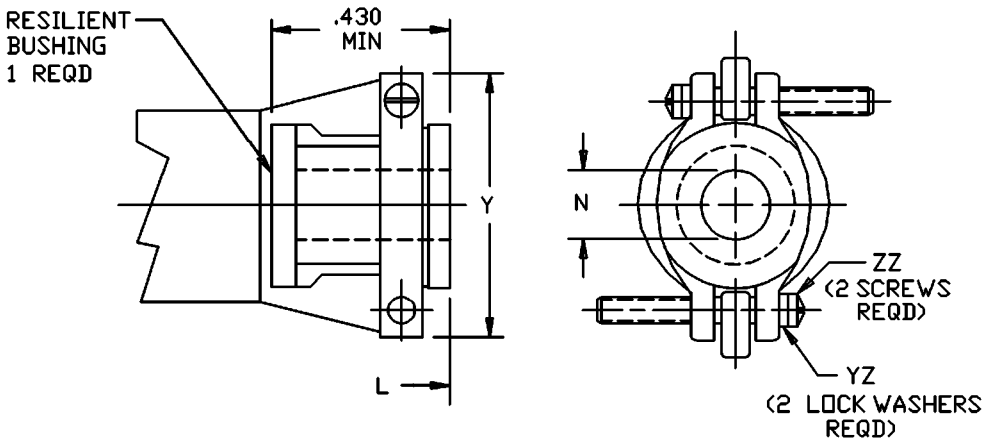

DIMENSIONS WITH BUSHING, CLASS F

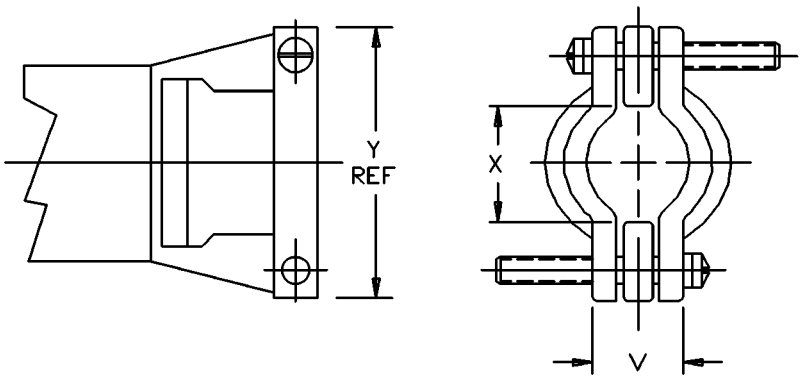

DIMENSIONS WITH BUSHING REMOVED, CLASS F

FIGURE 1. Dimensions and configurations for classes E, F and P - Continued.

DIMENSIONS FOR CLASS F

<table>
<tr><th>Shell size</th><th>L max overall length</th><th>X dia min open</th><th>Y max</th><th>V max closed</th><th>N free dia ±.010 (see note 4)</th><th>ZZ screw threads</th><th>YZ Lockwashers NASM35338 or NASM35333 types (see note 5)</th></tr>
<tr><td>8</td><td rowspan="3">1.906 (48.41)</td><td>.234 (5.94)</td><td>.828 (21.03)</td><td>.187 (4.75)</td><td>.125 (3.18)</td><td>6-32 UNC</td><td rowspan="4">NASM35338 -98 or -41
NASM35333 -105, -36 or -37</td></tr>
<tr><td>10</td><td>.297 (7.54)</td><td>.891 (22.63)</td><td>.187 (4.75)</td><td>.188 (4.78)</td><td rowspan="3"></td></tr>
<tr><td>12</td><td>.422 (10.72)</td><td>1.016 (25.81)</td><td>.281 (7.14)</td><td>.312 (7.92)</td></tr>
<tr><td>14</td><td>.547 (13.89)</td><td>1.141 (28.98)</td><td>.325 (8.26)</td><td>.375 (9.53)</td></tr>
<tr><td>16</td><td>2.047 (51.99)</td><td>.609 (15.47)</td><td>1.203 (30.56)</td><td>.356 (9.04)</td><td>.500 (12.70)</td></tr>
<tr><td>18</td><td>2.078 (52.78)</td><td rowspan="2">.734 (18.64)</td><td rowspan="2">1.469 (37.31)</td><td>.456 (11.58)</td><td>.625 (15.88)</td><td>8-32 UNC</td><td rowspan="4">NASM35338 -99 or -42
NASM35333 -106 or -38</td></tr>
<tr><td>20</td><td rowspan="2">2.328 (59.13)</td><td rowspan="2">.519 (13.18)</td><td>.625 (15.88)</td><td rowspan="3"></td></tr>
<tr><td>22</td><td>.922 (23.42)</td><td>1.656 (42.06)</td><td>.750 (19.05)</td></tr>
<tr><td>24</td><td>2.453 (62.31)</td><td>.984 (24.99)</td><td>1.750 (44.45)</td><td>.657 (16.69)</td><td>.800 (20.32)</td></tr>
</table>

FIGURE 1. Dimensions and configurations for classes E, F and P - Continued.

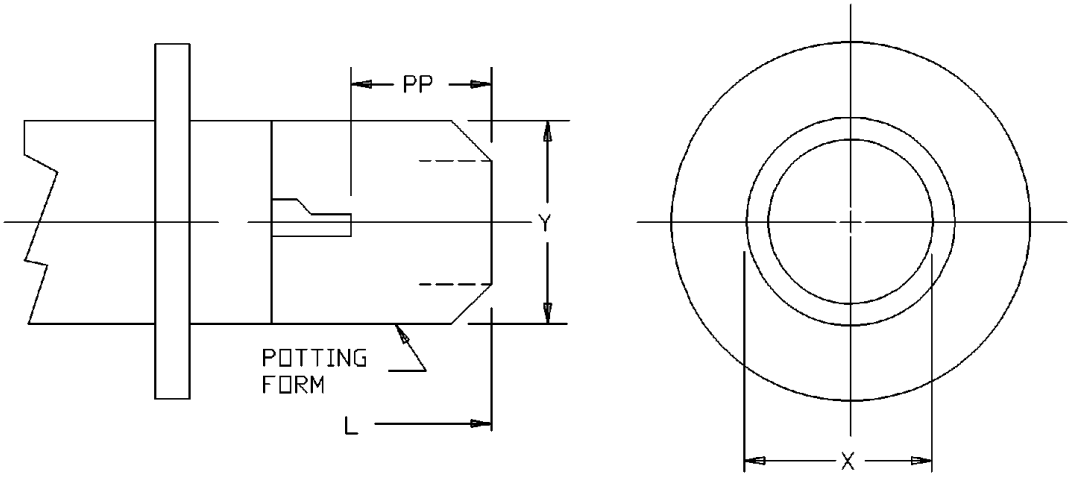

CLASS P

DIMENSIONS FOR CLASS P

Shell size	L max overall length	X dia min ID	Y dia max OD	PP min
8	1.391 (35.33)	.317 (8.05)	.608 (15.44)	.250 (6.35)
10		.434 (11.02)	.734 (18.64)	
12		.548 (13.92)	.858 (21.79)	
14		.673 (17.09)	.984 (24.99)	
16		.798 (20.27)	1.110 (28.19)	
18		.899 (22.83)	1.234 (31.34)	
20	1.641 (41.68)	1.024 (26.01)	1.360 (34.54)	
22		1.149 (29.18)	1.484 (37.69)	
24	1.703 (43.26)	1.274 (32.36)	1.610 (40.89)	

FIGURE 1. Dimensions and configurations for classes E, F and P - Continued.

Inches	mm	Inches	mm	Inches	mm	Inches	mm	Inches	mm
.005	0.13	.375	9.52	.691	17.55	1.024	26.01	1.451	36.86
.010	0.25	.384	9.75	.697	17.70	1.039	26.39	1.469	37.31
.011	0.28	.422	10.72	.717	18.21	1.066	27.08	1.484	37.69
.015	0.38	.430	10.92	.734	18.64	1.076	27.33	1.500	38.10
.016	0.41	.434	11.02	.750	19.05	1.078	27.38	1.510	38.35
.020	0.51	.446	11.33	.779	19.79	1.110	28.19	1.516	38.51
.023	0.58	.456	11.58	.798	20.27	1.123	28.52	1.531	38.89
.028	0.71	.457	11.61	.800	20.32	1.125	28.58	1.566	39.78
.031	0.79	.469	11.91	.814	20.68	1.135	28.83	1.576	40.03
.032	0.81	.479	12.17	.818	20.78	1.141	28.98	1.549	40.49
.062	1.57	.500	12.70	.828	21.03	1.149	29.18	1.610	40.89
.070	1.78	.519	13.18	.858	21.79	1.164	29.59	1.625	41.28
.117	2.97	.530	13.46	.875	22.22	1.191	30.25	1.635	41.53
.125	3.18	.540	13.72	.879	22.33	1.201	30.51	1.641	41.68
.148	3.75	.547	13.89	.885	22.48	1.203	30.56	1.656	42.06
.156	3.96	.548	13.92	.891	22.63	1.234	31.34	1.703	43.26
.187	4.75	.5625	14.288	.899	22.83	1.250	31.75	1.750	44.45
.188	4.78	.564	14.33	.901	22.89	1.260	32.00	1.766	44.86
.234	5.94	.572	14.53	.907	23.04	1.266	32.16	1.781	45.24
.250	6.35	.589	14.96	.912	23.16	1.275	32.39	1.828	46.43
.259	6.58	.608	15.44	.922	23.42	1.289	32.74	1.906	48.41
.281	7.14	.609	15.47	.942	23.93	1.316	33.43	1.954	49.63
.297	7.54	.625	15.88	.952	24.18	1.326	33.68	2.047	51.99
.312	7.92	.655	16.64	.954	24.23	1.344	34.14	2.078	52.78
.317	8.05	.657	16.69	.984	24.99	1.360	34.54	2.203	55.96
.325	8.26	.665	16.89	1.000	25.40	1.375	34.92	2.328	59.13
.329	8.36	.673	17.09	1.009	25.63	1.385	35.18	2.453	62.31
.356	9.04	.6875	17.462	1.010	25.65	1.391	35.33		
.359	9.12	.689	17.50	1.016	25.81	1.441	36.60		

NOTES:

1. Dimensions are in inches.
2. Metric equivalents are given for information only.
3. Intermateability dimensions shall be in accordance with MIL-DTL-26482.
4. Use SAE-AS85049/139 bushing if reduced opening is required.
5. Lock washers may be captive.
6. Not for Air Force use. Use MS3474 in lieu of MS3114 classes E, F and P.
7. True position (TP) tolerances specified are in accordance with ASME Y14.5.

FIGURE 1. Dimensions and configurations for classes E, F and P - Continued.

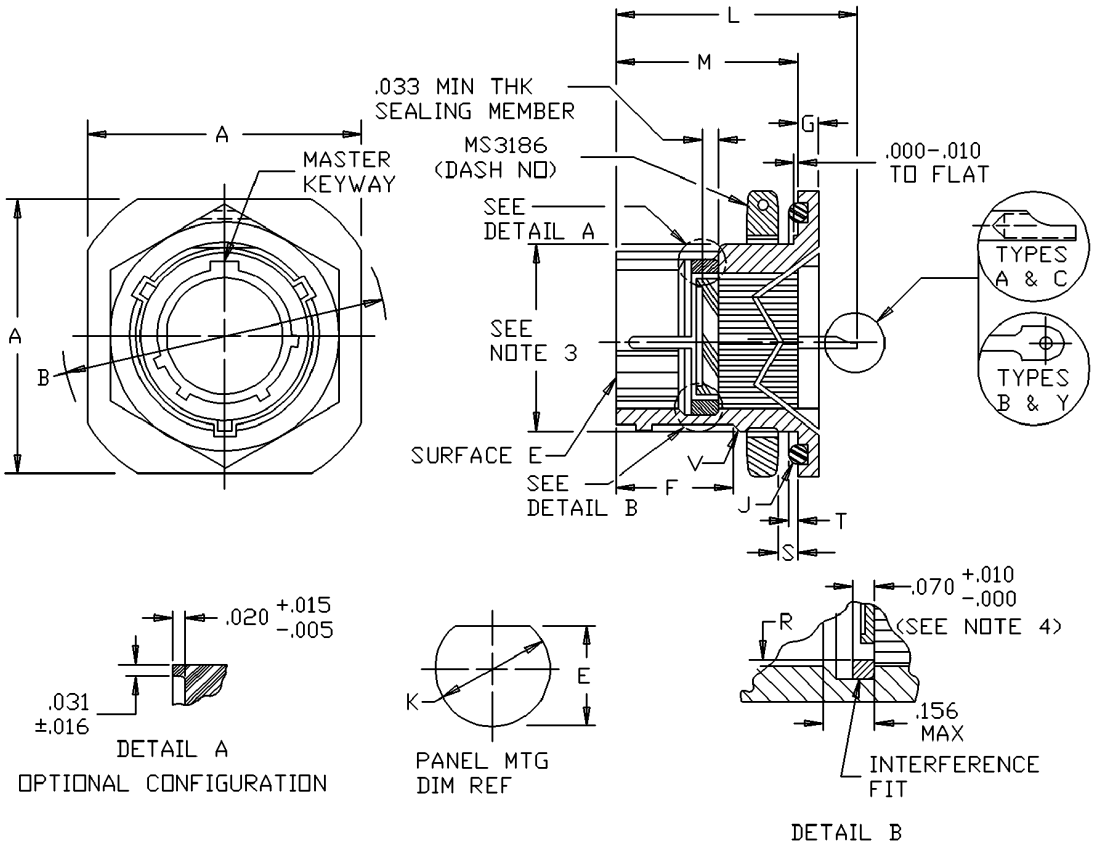

STYLE P
PIN INSERT

FIGURE 2. Dimensions and configurations for class H.

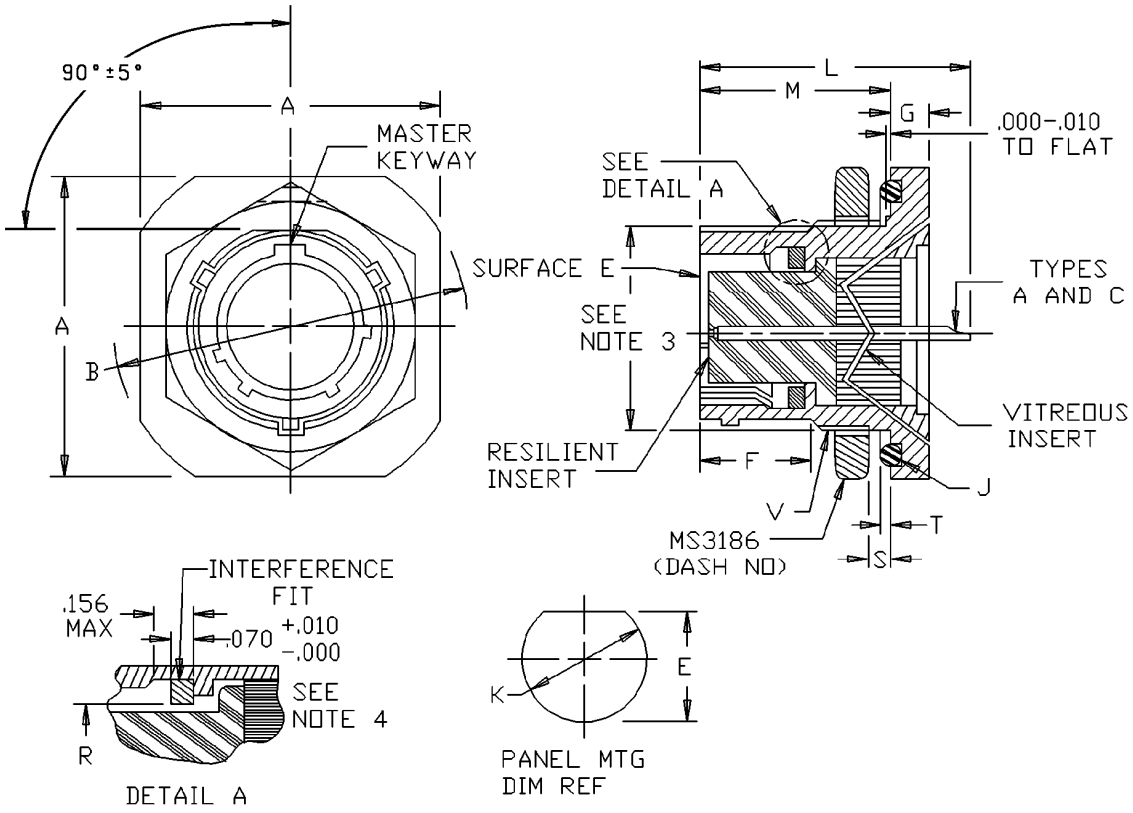

STYLE S
SOCKET INSERT

FIGURE 2. Dimensions and configurations for class H - Continued.

Shell size	A max length	B dia + .000 - .032 across flange corner	C + .000 - .010 mounting flat	E + .010 - .005 panel mounting hole	F min mounting thread location	G ± .020 thick mounting flange	J O-ring seal SAE-AS29513-	K + .010 - .005 panel mounting hole
8	.954 (24.23)	1.078 (27.38)	.530 (13.46)	.540 (13.72)	.384 (9.75)	.117 (2.97)	017	.572 (14.53)
10	1.078 (27.38)	1.203 (30.56)	.655 (16.64)	.665 (16.89)			019	.697 (17.70)
12	1.266 (32.16)	1.391 (35.33)	.818 (20.78)	.828 (21.03)			022	.885 (22.48)
14	1.391 (35.33)	1.516 (38.51)	.942 (23.93)	.952 (24.18)			024	1.010 (25.65)
16	1.516 (38.51)	1.641 (41.68)	1.066 (27.08)	1.076 (27.33)			026	1.135 (28.83)
18	1.641 (41.68)	1.766 (44.86)	1.191 (30.25)	1.201 (30.51)			028	1.260 (32.00)
20	1.828 (46.43)	1.954 (49.63)	1.316 (33.43)	1.326 (33.68)	.446 (11.33)	.148 (3.76)	128	1.385 (35.18)
22	1.954 (49.63)	2.078 (52.78)	1.441 (36.60)	1.451 (36.86)			130	1.510 (38.35)
24	2.078 (52.78)	2.203 (55.96)	1.566 (39.78)	1.576 (40.03)	.479 (12.17)		132	1.635 (41.53)

FIGURE 2. Dimensions and configuration for class H - Continued.

Shell size	L max	M +.031 .000 mounting flange location	R max ID gasket	S panel thickness ref		T ± .011 O-ring projection	V UNEF-2A mounting thread
				Min	Max		
8	.875 (22.23)	.691 (17.55)	.329 (8.36)	.062 (1.57)	.125 (3.18)	.023 (.58)	.5625-24
10			.457 (11.61)				.6875-24
12			.564 (14.33)				.875-20
14			.689 (17.50)				1.000-20
16			.814 (20.68)				1.125-18
18			.907 (23.04)				1.250-18
20	1.094 (27.79)	.879 (22.33)	1.039 (26.39)		.250 (6.35)	.028 (.71)	1.375-18
22			1.164 (29.57)				1.500-18
24	1.125 (28.58)	.912 (23.16)	1.289 (32.74)				1.625-18

Material and finish:

a. Shell types A and B - passivated stainless steel shells with gold plated contacts.
b. Shell types C and Y - tin-plated ferrous alloy shells with gold plated contacts (tin plating shall be no more than 97% pure tin and a minimum of 3% lead by mass).
c. Bayonet pins - passivated stainless steel.

FIGURE 2. Dimensions and configuration for class H - Continued.

Inches	mm	Inches	mm	Inches	mm	Inches	mm	Inches	mm
.005	0.13	.250	6.35	.814	20.68	1.078	27.38	1.441	36.60
.010	0.25	.329	8.36	.818	20.78	1.094	27.79	1.451	36.69
.011	0.28	.384	9.75	.828	21.03	1.125	28.58	1.500	38.10
.015	0.38	.446	11.33	.875	22.22	1.135	28.83	1.510	38.35
.016	0.41	.457	11.61	.879	22.33	1.164	29.59	1.516	38.51
.020	0.51	.479	12.17	.885	22.48	1.191	30.25	1.566	39.78
.023	0.58	.530	13.46	.907	23.04	1.201	30.51	1.576	40.03
.028	0.71	.540	13.72	.912	23.16	1.203	30.56	1.625	41.28
.031	0.79	.5625	14.288	.942	23.93	1.250	31.75	1.635	41.53
.032	0.81	.564	14.33	.952	24.18	1.260	32.00	1.641	41.68
.033	0.84	.572	14.53	.954	24.23	1.266	32.16	1.766	44.86
.062	1.57	.655	16.64	1.000	25.40	1.289	32.74	1.828	46.43
.070	1.78	.665	16.89	1.010	25.65	1.316	33.43	1.954	49.63
.117	2.97	.6875	17.462	1.024	26.01	1.326	33.68	2.078	52.78
.125	3.18	.689	17.50	1.039	26.39	1.375	34.92	2.203	55.96
.148	3.75	.691	17.55	1.066	27.08	1.385	35.18		
.156	3.96	.697	17.70	1.076	27.33	1.391	35.33		

NOTES:

1. Dimensions are in inches.
2. Metric equivalents are given for information only.
3. Intermateability dimensions shall be in accordance with MIL-DTL-26482.
4. Sealing member bonded to vitreous insert.
5. Not for Air Force use. Use MS3449 in lieu of MS3114 class H.
6. True position (TP) tolerances specified are in accordance with ASME Y14.5.
7. MS3114 class H is inactive for new design. For new design, use MS3449.

FIGURE 2. Dimensions and configurations for class H - Continued.

REQUIREMENTS:

Dimensions and configuration: See figures 1 and 2.
Connector mating: This connector mates with MS3116.
For insert arrangement: See MIL-STD-1669.
Sealing member (class H only): Bonded to vitreous insert.
Packing material shall meet the requirements of ASTM-D2000.
Finishes (classes E, F and P only): A finish designator shall not be included in the PIN when finish W is required. See MIL-DTL-26482 for alternative finish designators D, T and K for classes E, F and P.
Material and finish (class H only): See figure 2.

APPLICATION NOTE: MS3114 is similar to MS3474, except for the following: MS3474 utilizes crimp type rear release contacts, whereas connectors produced to this document utilize non-removable contacts with solderable terminations. Also, MS3474 does not include a hermetically sealed configuration. MS3114, class H, is similar to MS3449, series 2, class H, which has solder type terminations, and is also similar to MS3479, series 2, class N, which has crimp type terminations.

Part or Identifying Number (PIN) examples:

PIN example for classes E, F and P (see figure 1):

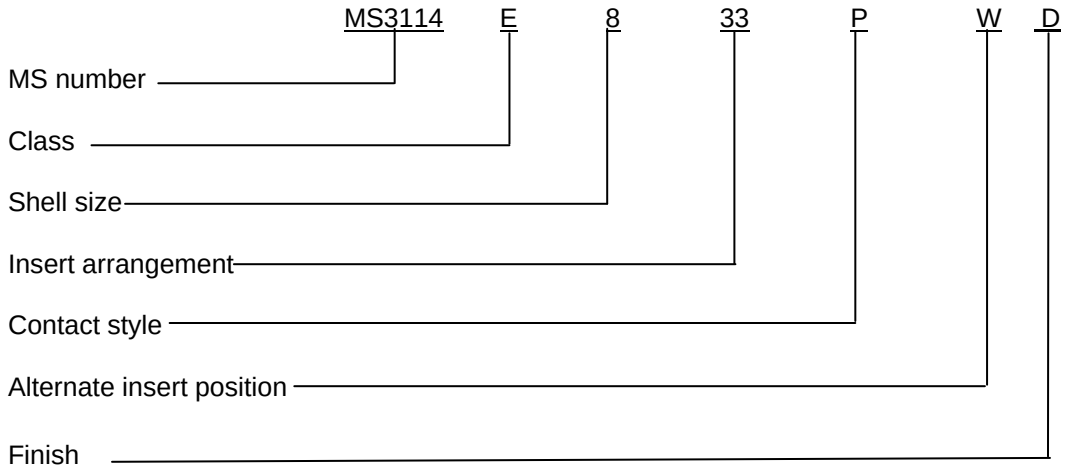

Note: No finish designator is used when finish W is required (finish W is the default finish).

PIN example for class H (see figure 2):

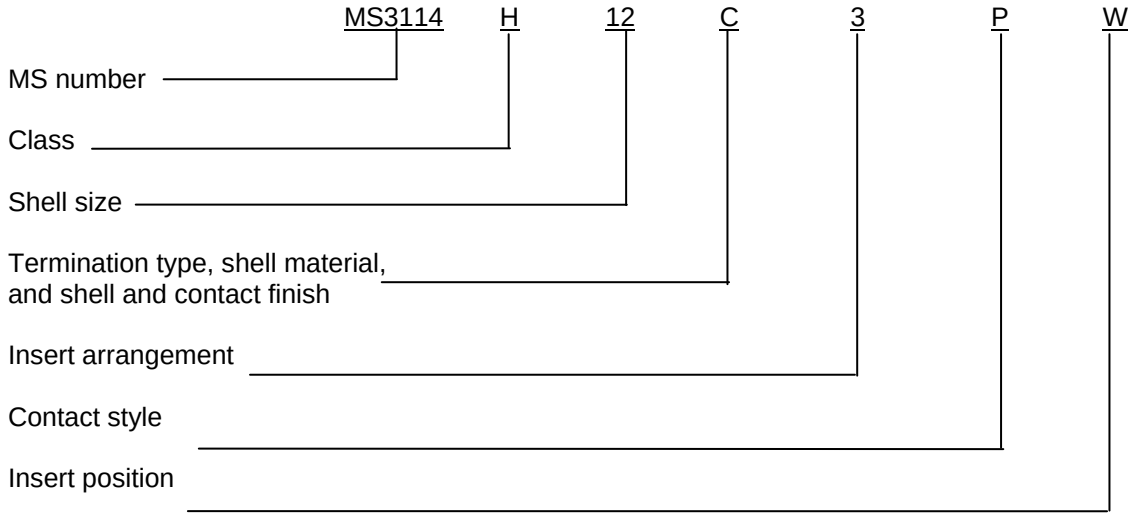

Changes from previous issue. The margins of this specification sheet are marked with vertical lines to indicate where changes from the previous issue were made. This was done as a convenience only and the Government assumes no liability whatsoever for any inaccuracies in these notations. Bidders and contractors are cautioned to evaluate the requirements of this document based on the entire content irrespective of the marginal notations and relationship to the last previous issue.

Referenced documents. In addition to MIL-DTL-26482, this document references the following:

MIL-STD-1669
MS3116
MS3449
MS3474
MS3479
NASM35338
NASM35333
ASME Y14.5
ASTM-D2000
SAE-AS85049/139

CONCLUDING MATERIAL

Custodians:
Army - CR
Navy - AS
Air Force - 85
DLA - CC

Preparing activity:
DLA - CC

(Project 5935-2015-033)

Review activities:
Army - AR, AV
Navy - EC, SH
Air Force - 99

NOTE: The activities listed above were interested in this document as of the date of this document. Since organizations and responsibilities can change, you should verify the currency of the information above using the ASSIST Online database at https://assist.dla.mil.