IMX35 Series

35 Watt Quad-Output DC-DC Converter

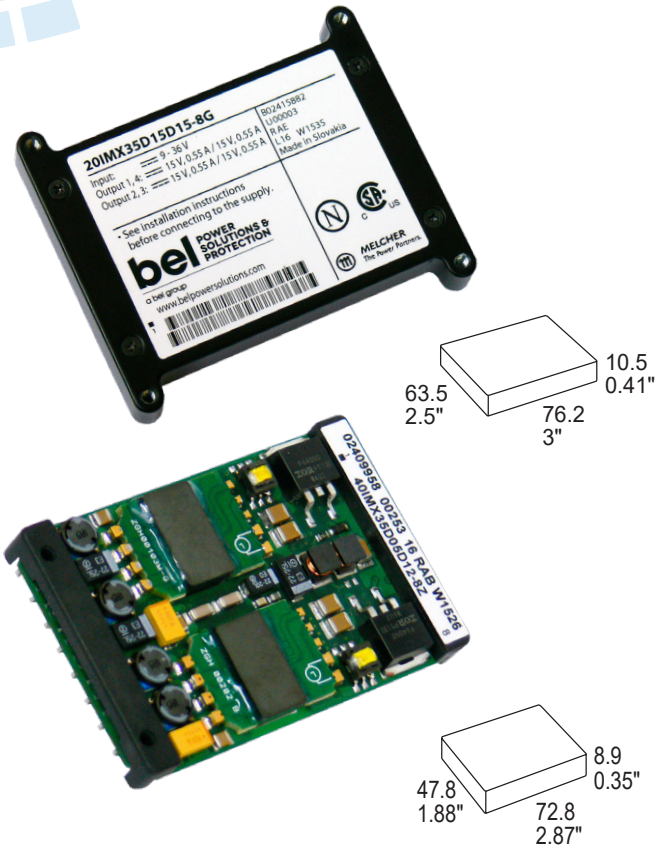

Features

- Extremely wide input voltage ranges up to 150 VDC
- 4 outputs up to 60 V
- RoHS lead-free-solder and lead-solder-exempted products available
- 5 year warranty for RoHS lead-free-solder products
- 1500 to 1800 VAC i/o electric strength test
- Electrical isolation between outputs
- Programmable input undervoltage lockout
- Shutdown/inhibit input
- Adjustable output voltages with flexible load distribution
- Frequency synchronization
- Outputs no-load, overload, and short-circuit proof
- Operating ambient temperature from –40 to 85 °C
- Thermal protection
- Low profile: 10.5 mm or 8.9 mm with open frame
- Basic insulation
- Flexible output possibilities between 5 V and 60 V
- Safety-approved to the latest edition of IEC/EN 62368-1, UL/CSA 60950-1

[1] 70/110IMX35 models

Table of Contents

Description....2
Model Selection....2
Functional Description....3
Electrical Input Data....4
Electrical Output Data....6
Auxiliary Functions....10
Electromagnetic Compatibility (EMC)....12
Immunity to Environmental Conditions....13
Mechanical Data....14
Safety and Installation Instructions....14
Description of Options....16

POWER | PROTECT | CONNECT

belfuse.com

Please read our datasheet & drawing disclaimer here.

IMX35 Series

35 W Quad-Output DC-DC Converter

MELCHER™

Description

The IMX35 Series of board-mountable, 35 Watt DC-DC converters has been designed according to the latest industry requirements and standards. The converters are particularly suitable for use in mobile or stationary applications in transport, railways, industry, or telecommunication, where variable input voltages or high transient voltages are prevalent.

Covering a total input voltage range from 9 V up to 150 V with 4 different models, the converters are available with up to four electrically isolated outputs from 5 V to 60 V, externally adjustable and with flexible load distribution. A shutdown input allows remote converter on/off. Features include consistently high efficiency over the entire input voltage range, high reliability, and excellent dynamic response to load and line changes.

The converters are designed and built according to the international safety standards IEC/EN 62368-1 3rd edition, and approved by Nemko. The converters provide basic insulation.

The circuit is comprised of 2 planar magnetics devices, and all components are automatically assembled and securely soldered onto a single PCB board without any wire connection. Magnetic feedback ensures maximum reliability and repeatability in the control loop over all operating conditions. Careful considerations of possible thermal stresses ensure the absence of hot spots providing long life in environments, where temperature cycles are present. The thermal design without using any potting material allows operation at full load up to an ambient temperature of 71 °C in free air and operation up to 105 °C with airflow. For extremely high vibration environments the case has holes for screw mounting.

Model Selection

Table 1: Model Selection

Output 1		Output 2		Output 3		Output 4		Input voltage	Efficiency [1]		Model	Options [2]
$V_{o\,nom}$ [VDC]	$I_{o\,nom}$ [A]	$V_{o\,nom}$ [VDC]	$I_{o\,nom}$ [A]	$V_{o\,nom}$ [VDC]	$I_{o\,nom}$ [A]	$V_{o\,nom}$ [VDC]	$I_{o\,nom}$ [A]	$V_{i\,min}$ to $V_{i\,max}$ [VDC]	η_{min} [%]	η_{max} [%]		
5	1.35	5	1.35	5	1.35	5	1.35	9 to 36	82.5	84.5	20IMX35D05D05-8G	
5	1.4	5	1.4	5	1.4	5	1.4	18 to75	82	84	40IMX35D05D05-8G	
5	1.4	5	1.4	5	1.4	5	1.4	40 to 121	83	85	70IMX35D05D05-8G	
5	1.4	5	1.4	5	1.4	5	1.4	60 to 150 [2]	82	84	110IMX35D05D05-8G	
12	0.65	12	0.65	12	0.65	12	0.65	9 to 36	83.5	85.5	20IMX35D12D12-8G	
12	0.7	12	0.7	12	0.7	12	0.7	18 to75	83.5	85.5	40IMX35D12D12-8G	
12	0.7	12	0.7	12	0.7	12	0.7	40 to 121	84.5	86.5	70IMX35D12D12-8G	
12	0.7	12	0.7	12	0.7	12	0.7	60 to 150 [2]	84	86	110IMX35D12D12-8G	
15	0.55	15	0.55	15	0.55	15	0.55	9 to 36	84	86	20IMX35D15D15-8G	i,
15	0.6	15	0.6	15	0.6	15	0.6	18 to75	83.5	85.5	40IMX35D15D15-8G	Z,
15	0.6	15	0.6	15	0.6	15	0.6	40 to 121	84	86	70IMX35D15D15-8G	non-G
15	0.6	15	0.6	15	0.6	15	0.6	60 to 150 [2]	83	85	110IMX35D15D15-8G	
5	1.35	12	0.65	12	0.65	5	1.35	9 to 36	84	86	20IMX35D05D12-8G	
5	1.4	12	0.7	12	0.7	5	1.4	18 to75	84	86	40IMX35D05D12-8G	
5	1.4	12	0.7	12	0.7	5	1.4	40 to 121	84	86	70IMX35D05D12-8G	
5	1.4	12	0.7	12	0.7	5	1.4	60 to 150 [2]	83.5	85.5	110IMX35D05D12-8G	
5	1.35	15	0.55	15	0.55	5	1.35	9 to 36	83.5	85.5	20IMX35D05D15-8G	
5	1.4	15	0.6	15	0.6	5	1.4	18 to75	83.5	85.5	40IMX35D05D15-8G	
5	1.4	15	0.6	15	0.6	5	1.4	40 to 121	84	86	70IMX35D05D15-8G	
5	1.4	15	0.6	15	0.6	5	1.4	60 to 150 [2]	84	86	110IMX35D05D15-8G	

[1] Efficiency at T_A = 25 °C, $V_{o\,nom}$, $I_{o\,nom}$
[2] 154 V for 2 s.

Product Marking

Converters without option Z are marked with type designation, input and output voltages and currents, applicable safety approval and recognition marks, company logo, production date, and serial no.

IMX35 Series

35 W Quad-Output DC-DC Converter

Part Number Description

40 IMX35 - D05 D05 -8 i Z G

Input voltage range V_i
- 9 to 36 VDC 20
- 18 to 75 VDC 40
- 40 to 121 VDC 70
- 60 to 150 VDC 110

Series IMX35

Outputs 1 and 4 (1st power train) D05, D12, D15

Outputs 2 and 3 (2nd power train) D05, D12, D15

Operating ambient temperature range
- T_A = –40 to 85 °C ..... -8

Options:
- Inhibit ..... -i
- Open frame ..... Z
- RoHS compliant for all six substances ..... G

Note: The sequence of options must follow the order above !

NFND: Not for new designs. Preferred for new designs.

Functional Description

The IMX35 converters are comprised of 2 feedback-controlled interleaved-switching flyback powertrains using current mode control.

Each converter consists of 4 electrically isolated outputs deriving from the 2 power trains. Vo1, Vo4 derive from the first powertrain and Vo2, Vo3 from the second one. Thus each pair of outputs is independent from the other one.

Voltage regulation for each pair of outputs is achieved with passive transformer feedback from the main transformer of the powertrain. Each pair of outputs has the same output voltage (i.e. D05, D12, etc.). If both powertrains have the same nominal output voltage (e.g. D12D12), all outputs may be simultaneously adjusted by the Trim input (pin 5). In case of different output voltages (e.g. D05D15), the Trim1 input influences only Vo1 and Vo4.

Current limitation is provided on the primary side for each powertrain and limits the possible output power for each pair of outputs. In the case of an overload on either of the power trains, which causes the output voltage to fall to less than typically 70% of $V_{o\,nom}$, the entire converter shuts down and automatically restart in short intervals (hiccup mode).

The incorporated overtemperature protection shuts down the hole converter in the case of overtemperature and resumes automatically after cooling down.

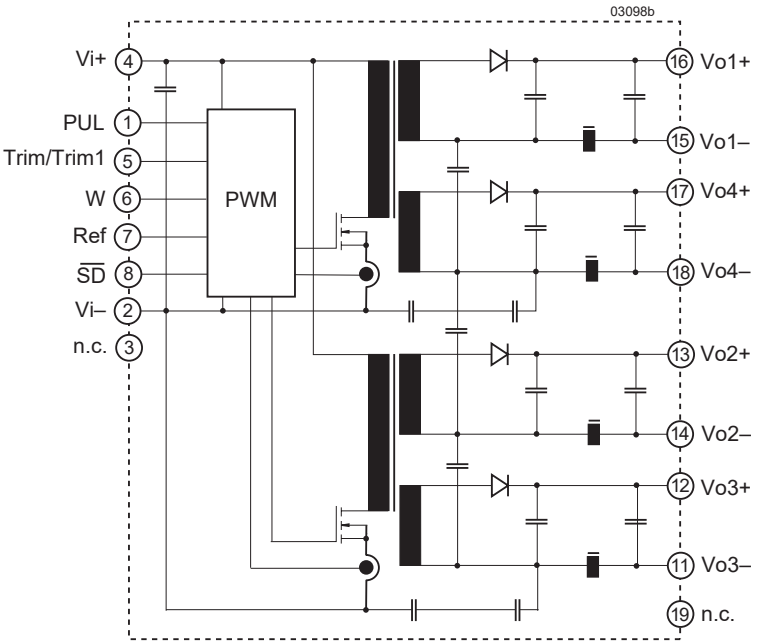

Fig. 1
Block diagram of quad-output models

IMX35 Series

35 W Quad-Output DC-DC Converter

Electrical Input Data

General conditions:

T_A = 25 °C, unless specified
Pins 8 (shutdown or i), 6 (W), 5 (Trim or Trim1), and 1 (PUL) left open-circuit (not connected), unless specified.

Table 2: Input Data

Model				20IMX35			40IMX35			Unit
Characteristics			Conditions	min	typ	max	min	typ	max	
V_i	Input voltage range [1]		$T_{A\,min}$ to $T_{A\,max}$,	9 [2]		36	18 [2]		75	V
$V_{i\,nom}$	Nominal input voltage		I_o = 0 to $I_{o\,nom}$		20			40		V
$V_{i\,sur}$	Repetitive surge voltage		Abs. max input (3 s)			40			100	V
$t_{start\text{-}up}$	Converter start-up time [2]	Switch on	Worst case condition at $V_{i\,min}$, and full load		0.25	0.5		0.25	0.5	s
		$\overline{SD}$ high				0.1			0.1	s
t_{rise}	Rise time [3]		$V_{i\,nom}$, resistive load		3			3		ms
			$I_{o\,nom}$, capacitive load		6	12		6	12	ms
$I_{i\,o}$	No-load input current		I_o = 0, $V_{i\,min}$ to $V_{i\,max}$			70			50	mA
$I_{i\,rr}$	Reflected ripple current		I_o = 0 to $I_{o\,nom}$			30			30	mA_{pp}
$I_{i\,inr\,p}$	Inrush peak current [4]		$V_i = V_{i\,nom}$			8			9	A
C_i	Input capacitance		For surge calculation		2			1.3		µF
$V_{\overline{SD}}$	Shutdown voltage		Converter disabled		-10 to +0.7			-10 to +0.7		V
			Converter operating		open circuit or 2 to 20			open circuit or 2 to 20		V
$R_{\overline{SD}}$	Shutdown input resistance				approx. 10			approx. 10		kΩ
$I_{\overline{SD}}$	Input current during shutdown		$V_{i\,min}$ to $V_{i\,max}$			12			6	mA
f_s	Switching frequency		$V_{i\,min}$ to $V_{i\,max}$, I_o = 0 to $I_{o\,nom}$		220	240		220	240	kHz

Model				70IMX35			110IMX35			Unit
Characteristics			Conditions	min	typ	max	min	typ	max	
V_i	Input voltage range [1]		$T_{A\,min}$ to $T_{A\,max}$,	40 [2]		121	60 [2]		150 [5]	V
$V_{i\,nom}$	Nominal input voltage		I_o = 0 to $I_{o\,nom}$		70			110		V
$V_{i\,sur}$	Repetitive surge voltage		Abs. max input (3 s)			150			170	V
$t_{start\text{-}up}$	Converter start-up time [2]	Switch on	Worst case condition at $V_{i\,min}$, and full load		0.25	0.5		0.4	0.7	s
		$\overline{SD}$ high				0.1			0.1	s
t_{rise}	Rise time [3]		$V_{i\,nom}$, resistive load		3			3		ms
			$I_{o\,nom}$, capacitive load		6	12		6	12	ms
$I_{i\,o}$	No-load input current		I_o = 0, $V_{i\,min}$ to $V_{i\,max}$			30			20	mA
$I_{i\,rr}$	Reflected ripple current		I_o = 0 to $I_{o\,nom}$			30			30	mA_{pp}
$I_{i\,inr\,p}$	Inrush peak current [4]		$V_i = V_{i\,nom}$			7			7	A
C_i	Input capacitance		For surge calculation		0.5			0.5		µF
$V_{\overline{SD}}$	Shutdown voltage		Converter disabled		-10 to +0.7			-10 to +0.7		V
			Converter operating		open circuit or 2 to 20			open circuit or 2 to 20		V
$R_{\overline{SD}}$	Shutdown input resistance				approx. 10			approx. 10		kΩ
$I_{\overline{SD}}$	Input current during shutdown		$V_{i\,min}$ to $V_{i\,max}$			5			5	mA
f_s	Switching frequency		$V_{i\,min}$ to $V_{i\,max}$, I_o = 0 to $I_{o\,nom}$		220	240			225 [6]	kHz

1 $V_{i\,min}$ will not be as stated, if V_o is increased above $V_{o\,nom}$ by use of Trim input. If the output voltage is set to a higher value, $V_{i\,min}$ will be proportionately increased.
2 Input undervoltage lockout at typ. 85% of $V_{i\,min}$.
3 Measured with resistive and max. admissible capacitive load.
4 Source impedance according to ETS 300132-2, version 4.3.
5 154 V during 2 s
6 Revision BA or later. Older converters had $f_s \leq 240$ kHz.

Inrush Current

The inrush current has been made as low as possible by choosing a very small input capacitance. A series resistor may be installed in the input line to further reduce this current.

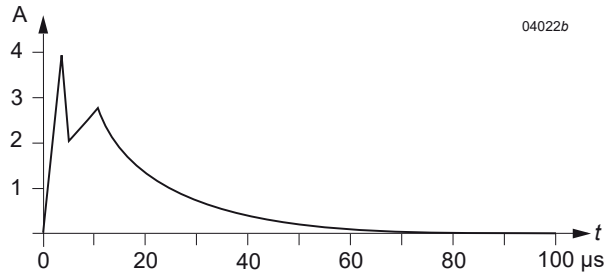

Fig. 2
Typical inrush current at $V_{i\,nom}$, $P_{o\,nom}$ versus time (40IMX35). Source impedance according to ETS 300132-2 at $V_{i\,nom}$.

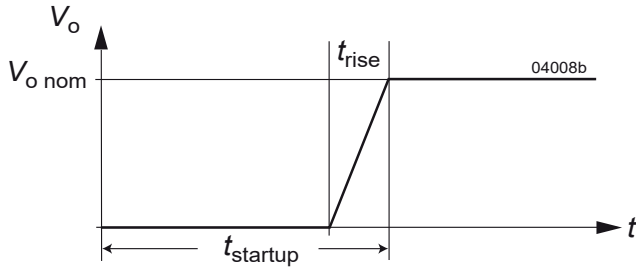

Fig. 3
Converter start-up and rise time (see table 2)

Reverse Polarity Protection

The built-in suppressor diode also provides for reverse polarity protection at the input by conducting current in the reverse direction. An external fuse is required to limit this current.

Table 3: Recommended external fuses in the non-earthed input line

Model	Fuse type
20IMX35	F 8.0 A
40IMX35	F 4.0 A
70IMX35	F 2.0 A
110IMX35	F 1.5 A

Input Transient Voltage Protection

A built-in suppressor diode provides effective protection against input transients, which may be generated for example by short-circuits across the input lines, where the network inductance may cause high energy pulses.

Table 4: Built-in transient voltage suppressor

Model	Breakdown voltage $V_{BR\,nom}$ [V]	Peak power at 1 ms P_P [Ω]	Peak pulse current I_{PP} [A]
20IMX35	39	1500	22
40IMX35	100	1500	9.7
70IMX35	151	600	2.9
110IMX35	176	600	2.5

For very high energy transients as for example to achieve IEC/EN 61000-4-5 compliance (as per table *Electromagnetic Immunity*) an external inductor and capacitor are required. The components should have similar characteristics as listed in table below.

Table 5:
Components for external circuitry for IEC/EN 61000-4-5, level 2

Model	Inductor (L)	Capacitor (C_1, C_2)	Diode (D)
20IMX35	1.45 mH / 5 A	C_1, C_2: 220 µF / 50 V	1.5 k E47A
40IMX35	4 mH / 3 A	C_1, C_2: 100 µF / 100 V	---
70IMX35	4 mH / 1.5 A	C_1: 120 µF / 160 V C_2: 240 µF / 160 V	---
110IMX35	4.5 mH / 1.5 A	C_1: 120 µF / 200 V C_2: 240 µF / 200 V	---

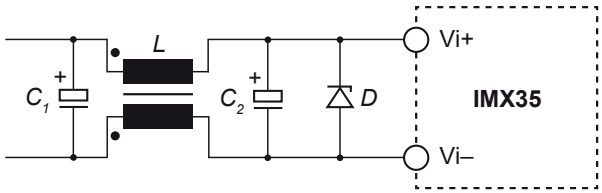

Fig. 4
Example for external circuitry to comply with IEC/EN 61000-4-5; the diode D is only necessary for 20IMX35 models.

Electrical Output Data

We recommend connecting an external 1 µF ceramic capacitor across the output pins.

General conditions:
- T_A = 25 °C, unless T_C is specified
- Pins 8 (shutdown or i), 6 (W), 5 (Trim or Trim1), and 1 (PUL) left open-circuit (not connected), unless specified.

*Table 6: Output data **per double-output powertrain** (Vo1/Vo4 or Vo2/Vo3; each power train has 2 outputs)*

Output Characteristics			Conditions	2 x 5 V min	2 x 5 V typ	2 x 5 V max	2 x 12 V min	2 x 12 V typ	2 x 12 V max	2 x 15 V min	2 x 15 V typ	2 x 15 V max	Unit
V_{o1} V_{o2}	Output voltage		$V_{i\,nom}$, $I_o = 0.5\ I_{o\,nom}$	4.95 4.94		5.05 5.06	11.88 11.86		12.12 12.14	14.85 14.82		15.15 15.18	V
$I_{o\,nom}$	Output current	20IMX	$V_{i\,min}$ to $V_{i\,max}$		2 x 1.35			2 x 0.65			2 x 0.55		A
		40IMX			2 x 1.40			2 x 0.70			2 x 0.60		
		70IMX			2 x 1.40			2 x 0.70			2 x 0.60		
		110IMX			2 x 1.40			2 x 0.70			2 x 0.60		
$I_{o\,L}$	Current limit [1]	20IMX	$V_{i\,nom}$, T_C = 25 °C, V_o = 93% $V_{o\,nom}$		3.5			1.8			1.5		
		40IMX			3.8			2.0			1.7		
		70IMX			3.8			2.0			1.7		
		110IMX			3.8			2.0			1.7		
ΔV_o	Line regulation		$V_{i\,min}$ to $V_{i\,max}$, $I_{o\,nom}$			±1			±1			±1	%
$\Delta V_{o\,l}$	Load regulation		$V_{i\,nom}$, I_o = (0.1 to 1) $I_{o\,nom}$			±3			±3			±3	
$V_{o1/2}$	Output voltage noise [5]		$V_{i\,min}$ to $V_{i\,max}$ [2]			80			120			150	mV_{pp}
			$I_o = I_{o\,nom}$ [3]			40			60			70	
$V_{o\,L}$	Output overvoltage limit [4]		Min. load 1%	115			115			115			%
$C_{o\,ext}$	Admissible capacitive load per power train [6]		produced after 2011 produced until 2011	0 0		6000 4000	0 0		680 470	0 0		470 330	µF
$V_{o\,d}$	Dynamic load regulation	Voltage deviation	$V_{i\,nom}$, $I_{o\,nom} \leftrightarrow {}^1/_2\ I_{o\,nom}$			±250			±480			±520	mV
t_d		Recovery time				0.75			0.75			0.75	ms
α_{Vo}	Temperature coefficient $\Delta V_o / \Delta T_C$		$V_{i\,min}$ to $V_{i\,max}$, I_o = (0.1 to 1) $I_{o\,nom}$			±0.02			±0.02			±0.02	%/K

[1] Both outputs of each powertrain connected in parallel. The current limit is primary side controlled. In the case of an overload condition, the thermal protection may cause the converter to shut down (automatic restart on cool-down).
[2] BW = 20 MHz, measured with an external capacitor of 1 µF across the output pins.
[3] Measured with a probe according to EN 61204
[4] The output overvoltage protection is located on the primary side. It is not tracking the Trim/Trim1 control.
[5] Both outputs of each powertrain connected in parallel.
[6] Sum of capacities on the outputs of each powertrain.

Thermal Considerations

If a converter, mounted on a PCB, is located in free, quasi-stationary air (convection cooling) at the indicated maximum ambient temperature $T_{A\,max}$ (see table *Temperature specifications*) and is operated at its nominal input voltage and output power, the case temperature T_C ($T_{C\,Z}$ with option Z) measured at the measuring point of case temperature (see *Mechanical Data*) will approach the indicated value $T_{C\,max}$ after the warm-up phase. However, the relationship between T_A and T_C depends heavily on the conditions of operation and integration into a system. The thermal conditions are influenced by input voltage, output current, airflow, temperature of surrounding components and the surfaces and properties of the printed circuit board. $T_{A\,max}$ is therefore only an indicative value, and under practical operating conditions, the ambient temperature T_A may be higher or lower than this value.

Caution: The case temperature T_C (*or* $T_{C\,Z}$) measured at the measuring point of case temperature (see *Mechanical Data*) may under no circumstances exceed the specified maximum value. The installer must ensure that under all operating conditions T_C (*or* $T_{C\,Z}$) remains within the limits stated in the table *Temperature specifications.*

The converters provide the specified output power with free air convection cooling. In the upper temperature range the output power derating below should be observed.

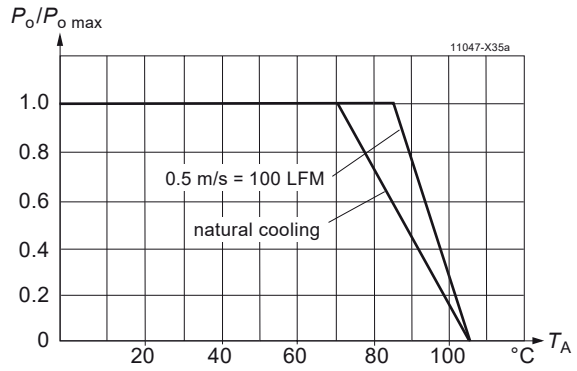

Fig. 5
Maximum allowed output power versus ambient temperature (models with and without option Z)

Overtemperature Protection

The converter is protected against possible overheating by means of an internal temperature monitoring circuit located on the primary side. It shuts down the converter above the internal temperature limit and attempts to restart automatically. This feature prevents excessive internal temperature building up which could occur under overload conditions.

Short Circuit Behavior

The current limit characteristic shuts down the converter whenever a short circuit is applied to an output. It acts self-protecting and automatically recovers after removal of the overload condition (hiccup mode).

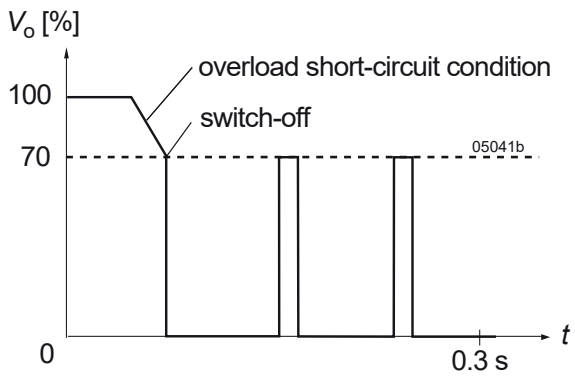

Fig. 6
Overload switch off (hiccup mode), typical values.

Series and Parallel Connection

The outputs of one or several double-output powertrains may be connected in series respecting the current limitation.

Both outputs of the same powertrain can always be connected in parallel in will behave like a single output.

Several outputs of the same converter with equal output voltage (e.g. 5 V / 5 V) can be connected in parallel and will share their output currents almost equally.

If outputs of the same converter are being parallel and series-connected, it is recommended that outputs from the same powertrains are parallel-connected first. This applies for instance, if 24 V shall be generated by a converter with four 12 V outputs; see fig. 7.

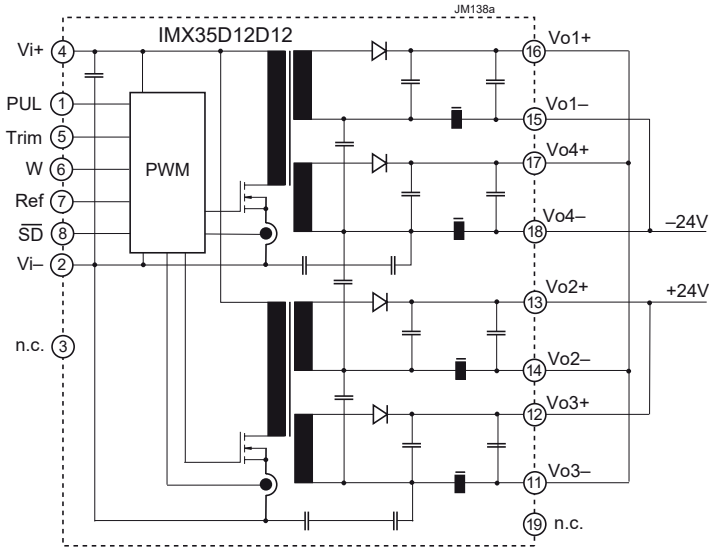

Fig. 7
Generating 24 V with an IMX35D12D12-8

Note: Parallel operation of several converters may cause start-up problems. This becomes noticeable in applications, where one converter is not able to deliver the full resistive and capacitive load current alone, as it is required in true redundant systems.

Typical Performance Curves

General conditions:

– T_A = 25 °C, unless T_C is specified.

– Shut down and Trim pin left open-circuit.

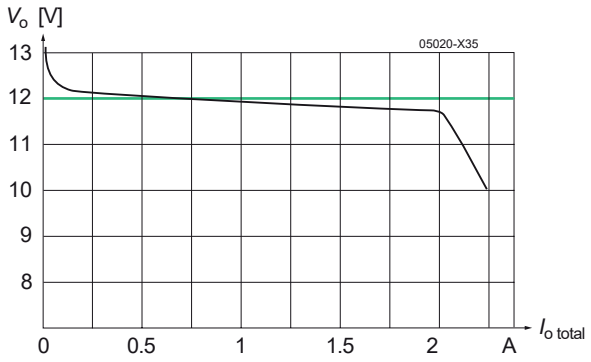

Fig. 8
V_o versus I_o (typ.) of a double-output power train, with both outputs in parallel (e.g., $V_{o1/4}$ of a 40IMX35D12D12)

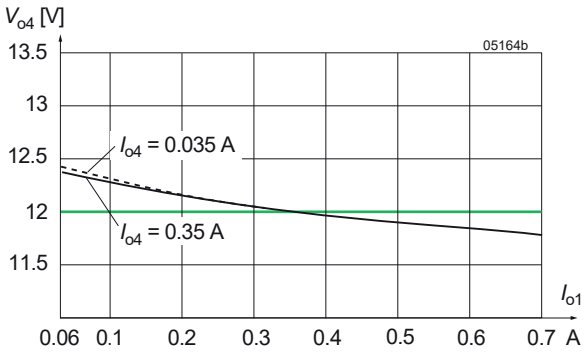

Fig. 9
Cross load regulation (typ.) on powertrain 1. V_{o4} versus I_{o1}

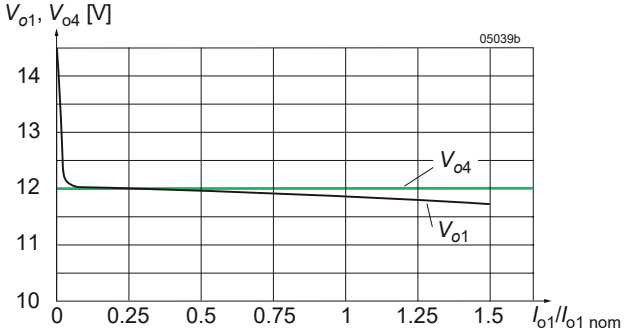

Fig. 10
Flexible load distribution (typ.) on power train 1 of a 40IMX35D12D12-8:
V_{o1} versus I_{o1}, I_{o4} = 0.5 $I_{o4\ nom}$

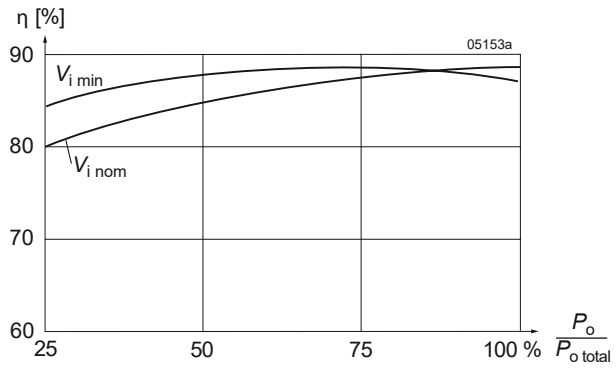

Fig. 11
Efficiency versus input voltage and load. Typical values (20IMX35D12D12-8)

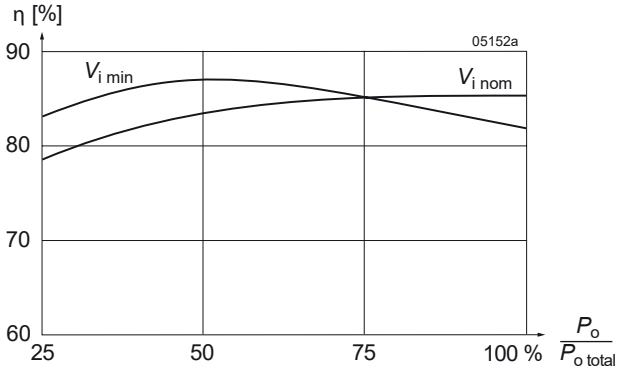

Fig. 12
Efficiency versus input voltage and load. Typical values (40IMX35D12D12-8)

Auxiliary Functions

Adjustable Output Voltage

As a standard feature, the IMX35 offer adjustable output voltages in the range of 85 to 105% of $V_{o\,nom}$. Fig. 13 shows the schematic diagram for the adjustment of quad-output models.

All models with equal output voltages have a Trim input at pin 5 referenced to the primary side, influencing all outputs simultaneously. Models with different output voltages exhibit a Trim1 input, influencing only the first power train (V_{o1} and V_{o4}).

Adjustment by means of an external resistor R_{ext}:

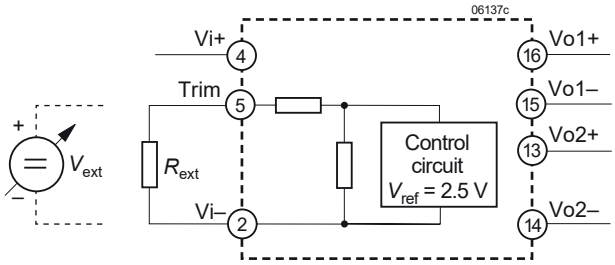

Fig. 13
Output voltage control by means of the Trim input

Table 7: R_{ext} for $V_o > V_{o\,nom}$; approximate values ($V_{i\,nom}$, $I_o = 0.5\ I_{o\,nom}$)

V_o [%$V_{o\,nom}$]	R_{ext} [kΩ]	
	Trim	Trim 1
105 to 108 (107 typically)	0	0
105	10	17
102	62	110
100	∞	∞

Table 8: V_o versus V_{ext} for V_o = 85 to 105% $V_{o\,nom}$; typical values ($V_{i\,nom}$, $I_o = 0.5\ I_{o\,nom}$)

V_o [%$V_{o\,nom}$]	V_{ext} [V]	
	Trim [V]	Trim 1 [V]
> 105	0	0
102	1.8	1.5
100	2.5	2.5
95	4.3	4.25
90	6.2	6.2
85	8	8

Adjustment of the output voltage by means of an external resistor R_{ext} is possible within the range of 100 to 105% of $V_{o\,nom}$. R_{ext} should be connected between Trim (pin 5) and Vi– (pin 2). The following table indicates suitable resistor values for typical output voltages under nominal conditions ($V_{i\,nom}$, $I_o = 0.5\ I_{o\,nom}$).

Note: Connection of R_{ext} to Vi+ may damage the converter.

Adjustment by means of an external voltage source V_{ext}

For external output voltage adjustment in the range 85 to 105% of $V_{o\,nom}$ a voltage source V_{ext} (0 to 20 V) is required, connected to Trim or Trim1 (pin 5) and Vi–. The table below indicates typical values V_o versus V_{ext}. Applying a control voltage of 15 to 20 V will set the converter into the hiccup mode. Direct paralleling of the Trim pins of converters of the same type connected in parallel is feasible.

Synchronization (W)

It is possible to synchronize the switching frequency of one or more converters to an external clock signal.

This logic input W can be used to synchronize the oscillator to an external frequency source. This signal is edge-triggered with TTL thresholds and requires a source frequency of 440 to 480 kHz (duty cycle 10 to 90%). The external source frequency is internally divided by 2 to define the switching frequency of the converter. If unused, this pin can be connected to V1– (pin 2) or left open-circuit.

Reference Output (Ref)

The converter provides a stable 5 V (±0.1 V) reference signal on pin 7 (Ref). The output is protected by a 1 kΩ resistor. The signal may be used also in conjunction with the Trim input (pin 5) as a limited external voltage reference.

It is recommended to connect a filter capacitor (0.1 µF) between Ref and Vi–, if Ref is used.

Shutdown

The outputs of the converters may be enabled or disabled by means of a logic signal (TTL, CMOS, etc.) applied to shutdown (pin 8). If the shutdown function is not required, pin 8 should be left open-circuit:

Converter operating:	2.0 to 20 V
Converter disabled:	–10 to +0.7 V

Progr. Input Undervoltage Lockout PUL

A special feature of the converter (with Rev. BA or later) is the adjustable undervoltage lockout protection, which protects the converter (and the system) from high current caused by operation at low input voltages. This ensures easier start-up in distributed power systems.

The table below shows the band of switch on/off and the hysteresis.

Table 9: Trigger level and hysteresis (pin 1 left open)

Model	Trigger level	Hysteresis	Unit
20IMX35	7 to 8	<0.5	V
40IMX35	14 to 15.5	<1	
70IMX35	31 to 34	<3	
110IMX35	42 to 50	< 8	

The undervoltage lockout levels may be programmed by using an external resistor R_{PUL} between PUL and Vi– to increase the preset levels as specified in table 10.

Table 10: Typical values for R_{PUL} and the respective lockout voltage for input voltage.

20IMX35		40IMX35	
R_{PUL} [kΩ]	$V_{i\,min}$ [V]	R_{PUL} [kΩ]	$V_{i\,min}$ [V]
∞	≤8	∞	≤15.5
39	10	43	22
19	12	16	26
13	14	10	28
9.1	16	0	32

70IMX35		110IMX35	
R_{PUL} [kΩ]	$V_{i\,min}$ [V]	R_{PUL} [kΩ]	$V_{i\,min}$ [V]
∞	**31**	∞	**42**
270	**40**	**270**	**50**
110	**50**	**120**	**60**
80	**55**	**51**	**75**

Electromagnetic Compatibility (EMC)

A suppressor diode together with an input filter form an effective protection against high input transient voltages which typically occur in many installations, but especially in battery-driven mobile applications.

Electromagnetic Immunity

Table 11: Immunity type tests

Phenomenon	Basic Standard	Level	Coupling mode [1]	Value applied	Waveform	Source imped.	Test procedure	In oper.	Perf. crit. [2]
Electrostatic discharge to case (not with option Z)	IEC/EN 61000-4-2	2 [3]	contact discharge (Trim pin open)	6000 V_p	1/50 ns	330 Ω 150 pF	10 pos. & 10 neg. discharges	yes	B
Electromagnetic field	IEC/EN 61000-4-3	x [4]	antenna	20 V/m	AM 80% / 1 kHz	N/A	80 – 800 MHz	yes	A
		[5]	antenna	20 V/m 10 V/m 5 V/m 3V/m	AM 80% / 1 kHz	N/A	800 – 1000 MHz 1400 – 2100 MHz 2100 – 2500 MHz 5100 – 6000 MHz	yes	A
Electrical fast transients / burst	IEC/EN 61000-4-4	3 [6]	direct +i/–i	±2000 V_p	bursts of 5/50 ns; 5 kHz over 15 ms burst period 300 ms	50 Ω	60 s positive 60 s negative transients	yes	A
Surges	IEC/EN 61000-4-5	3 [7]	+i/–i	±1000 V_p	1.2 / 50 µs	42 Ω 0.5 µF	5 pos. & 5 neg. surges	yes	A
RF Conducted immunity	IEC/EN 61000-4-6	3 [8]	+i/–i	10 VAC (140 dBµV)	AM modulated 80% / 1 kHz	50 Ω	0.15 – 80 MHz 150 Ω	yes	A

1 i = input, o = output, c = case (not with option Z)
2 A = normal operation, no deviation from specification, B = temporary deviation from specs. possible.
3 Corresponds to EN 50121-3-2:2016 table 5.3
4 Corresponds to EN 50121-3-2:2016 table 5.1
5 Corresponds to EN 50121-3-2:2016 table 5.2
6 Corresponds to EN 50121-3-2:2016 table 3.2
7 Corresponds to EN 50121-3-2:2016 table 3.3, external components required; see fig. 15
8 Corresponds to EN 50121-3-2:2016 table 3.1

Electromagnetic Emissions

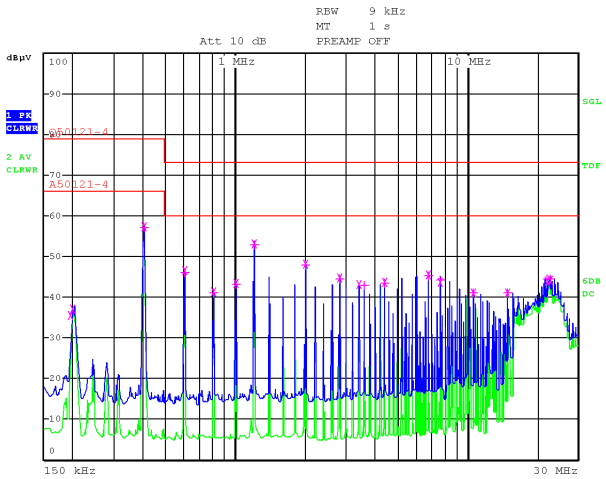

Fig. 14
Typ disturbances (quasi-peak and average) at the input according to EN 50121-4, measured at $V_{i\,nom}$ and $I_{o\,nom}$ (110IMX35D05D15-8).

Conducted Emissions

Compliance with EN 55011 group 1, class A, and EN 50121-4 was tested with the filter Fig. 4 (values Table 5) see page 5. The resuts are shown in Fig. 14 above.

Immunity to Environmental Conditions

Table 12: Mechanical and climatic stress

Test method		Standard	Test Conditions		Status
Cab	Damp heat steady state	IEC/EN 60068-2-78 MIL-STD-810D section 507.2	Temperature: Relative humidity: Duration:	$40^{\pm 2}$ °C $93^{+2/-3}$ % 56 days	Converter not operating
Ka	Salt mist test (sodium chloride NaCl solution) [2]	EN 50155:2007 clause 12.2.10 class ST3 [2]	Temperature: Duration:	$35^{\pm 2}$ °C 48 h	Converter not operating
Fc	Vibration (sinusoidal)	IEC/EN 60068-2-6 MIL-STD-810D section 514.3	Acceleration amplitude: Frequency (1 Oct/min): Test duration:	0.35 mm (10 – 60 Hz) 5 g_n = 49 m/s^2 (60 - 2000 Hz) 10 – 2000 Hz 7.5 h (2.5 h in each axis)	Converter operating
Fh	Random vibration road-band (digital control) & guidance	IIEC/EN 60068-2-64	Acceleration spectral density: Frequency band: Acceleration magnitude: Test duration:	0.05 g_n^2/Hz 8 to 500 Hz 4.9 $g_{n\ rms}$ 1.5 h (0.5 h in each axis)	Converter operating
Ea	Shock (half-sinusoidal)	IEC/EN 60068-2-27 MIL-STD-810D section 516.3	Acceleration amplitude: Bump duration: Number of bumps:	50 g_n = 490 m/s^2 11 ms 18 (3 in each direction)	Converter operating
-	Shock	EN 50155:2007 clause 12.2.11 EN 61373 sect. 10, class B, body mounted [1]	Acceleration amplitude: Bump duration: Number of bumps:	5.1 g_n 30 ms 18 (3 in each direction)	Converter operating
-	Simulated long life testing at increased random vibration levels	EN 50155:2007 clause 12.2.11 EN 61373 sect. 8 and 9, body mounted [1]	Acceleration spectral density: Frequency band: Acceleration magnitude: Test duration:	0.02 g_n^2/Hz 5 to 150 Hz 0.8 $g_{n\ rms}$ 15 h (5 h in each axis)	Converter operating

[1] Body mounted = chassis of a railway coach
[2] Models without option Z

Temperatures

Table 13: Temperature specifications, valid for air pressure of 800 to 1200 hPa (800 to 1200 mbar)

Model			-8			Unit
Characteristics		Conditions	min	typ	max	
T_A	Ambient temperature	Operational [1]	- 40 [3]		85 [1]	° C
T_C	Case temperature (without opt. Z) [2]		- 40 [3]		105 [2]	
$T_{C\,Z}$	Components temperature with opt. Z [2]		- 40 [3]		105 [2]	
T_S	Storage temperature	Non operational	- 55		85	

[1] See *Thermal Considerations*
[2] Temperature measurement point; see *Mechanical Data*
[3] Start-up at –55 °C

Reliability

Table 14: MTBF at nom. load

Ratings		Ground benign	Ground fixed		Ground mobile	Device hours [1]	Unit
Model	Standard	40 °C	40 °C	70 °C	50 °C		
40IMX35	MIL-HDBK-217F, T_C	336 000	141 000	86 000	110 000	396 000	h
110IMX35	Bellcore, T_A	1 445 000	529 000	294 000	144 000		

[1] The device hours are based upon the IMX35 series field failure rate recorded between 2000 and 2005

Mechanical Data

Dimensions in mm (inches). Tolerances ±0.3 mm, unless otherwise noted.

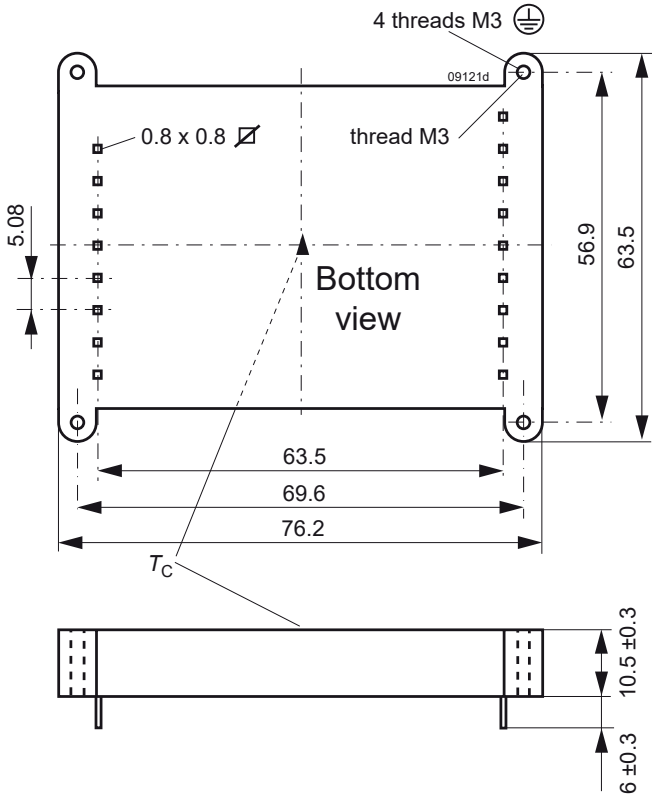

Fig. 15
Case IMX35 (Standard)
Material: Zinc; weight: approx. 104 g

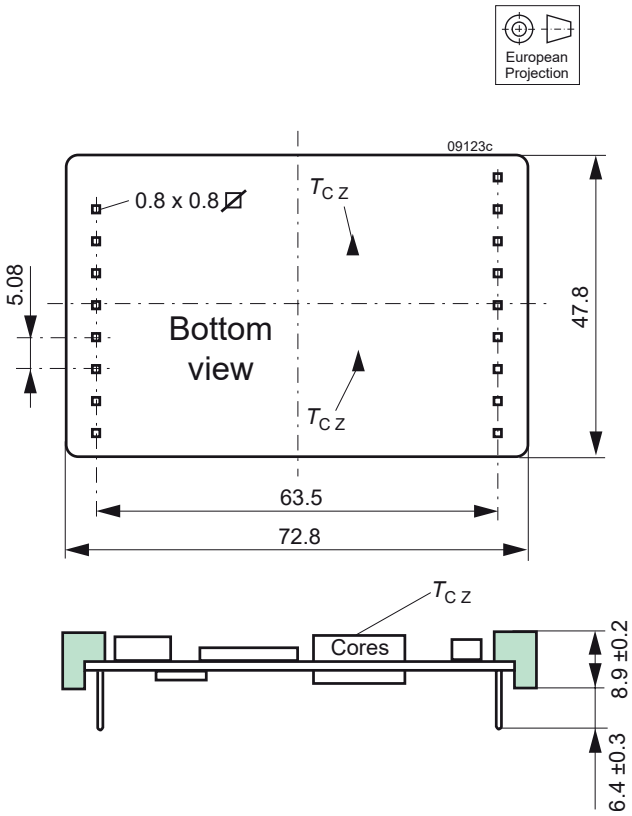

Fig. 16
Case IMX35 open frame (option Z)
Weight: approx. 47 g

Safety and Installation Instruction

Pin Allocation

Table 15: Pin allocation

Pin No.	Quadruple output
1	PUL
2	Vi-
3	n.c.
4	Vi+
5	Trim or Trim 1
6	W
7	Ref
8	$\overline{\text{SD}}$ or i

Pin No.	Quadruple output
11	Vo3-
12	Vo3+
13	Vo2+
14	Vo2-
15	Vo1-
16	Vo1+
17	Vo4+
18	Vo4-
19	n.c.

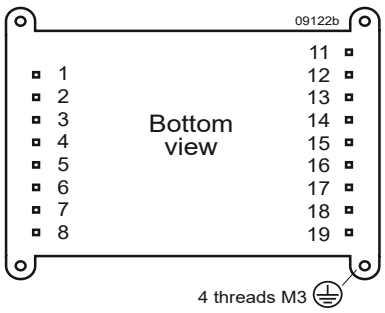

Fig. 17
Footprint. The holes in the PCB should have a diameter of 1.6 mm.

Installation Instructions

Installation of the converters must strictly follow the national safety regulations in compliance with the enclosure, mounting, creepage, clearance, casualty, markings, and segregation requirements of the end-use application.

Connection to the system shall be made via a printed circuit board with hole diameters of 1.5 mm for the pins.

The converters should be connected to a secondary circuit.

Do not open the converter.

Ensure that a converter failure (e.g., by an internal short-circuit) does not result in a hazardous condition.

Input Fuse

To prevent excessive current flowing through the input supply line in case of a short-circuit in the converter, an external fuse should be installed in the non-earthed input line. We recommend a fast acting fuse specified in table 3.

Standards and Approvals

All converters are safety-approved to IEC/EN 62368-1 and UL/CSA 60950-1.

The converters have been evaluated for:

- Building-in
- Basic insulation input to output, based on their maximum input voltage
- Pollution degree 2 (not option Z)
- Connecting the input to a secondary circuit, which is subject to a maximum transient rating of 1500 V.

The converters are subject to manufacturing surveillance in accordance with the above mentioned standards.

CB scheme is available.

Railway Applications

To comply with Railway standards, all components are coated with a protective lacquer (except for option Z).

Protection Degree and Cleaning Liquids

The protection degree is IP 30 (not for option Z). In order to avoid damage, any penetration of cleaning fluids should be prevented, since the converters are not hermetically sealed.

However, open-frame models (option Z) leave the factory unlacquered; they may be lacquered by the customer, for instance together with the mother board. Cleaning liquids are not permitted – except washing at room temperature with isopropyl alcohol and de-inonized/destilled water (1 : 1).

Note: Cleaning liquids can damage the adhesive joints of the ferrite cores.

Isolation

The electric strength test is performed in the factory as a routine test in accordance with EN 62911 and EN 62368-1, and should not be repeated in the field. The Company will not honor any warranty claims resulting from electric strength field tests.

Table 16: Electric strength test voltages

Characteristics	Input to (outputs + case)	Input to (outputs + case)	Outputs to case all models [3]	Betveen outputs all models	Unit
	20/40IMX35 [3]	70/110IMX35 [3]			
Factory test >1 s	1.2 / 1.5 [1]	1.8	0.5	0.15 [2]	kVAC
Equivalent DC test voltage	1.5 / 2.1 [1]	2.5	0.7	0.20 [2]	kVDC
Insulation resistance (500 VDC)	>100	> 100	-	-	MΩ

[1] 1.5 kVAC according to IEC 62368-1 3rd edition, sect. 6.2, Telecom equipment; type test with 1.5 kVAC / 60 s (IEE 802.3). IMX35 units produced before 2013 were tested with 1.2 kVAC only.

[2] The test voltage between outputs is not applied as routine test.

[3] For open-frame models (option Z), only the insulation input to outputs is tested.

Asia-Pacific +86 755 298 85888
EMEA +353 61 531 820
North America +1 866 513 2839
powersupport@belf.com
belfuse.com

Please read our datasheet & drawing disclaimer here.

IMX35 Series

35 W Quad-Output DC-DC Converter

Description of Options

i: Inhibit (Negative Shutdown Logic)

The outputs of the converter may be enabled or disabled by means of a logic signal (TTL, CMOS, etc.) applied to the inhibit pin 8. If the inhibit function is not required the inhibit (pin 8) should be connected to Vi– to enable the output (active low logic, fail safe).

Voltage at pin 8:

Converter operating:	–10 V to 0.8 V
Converter disabled:	2.4 V to 20 V or left open-circuit

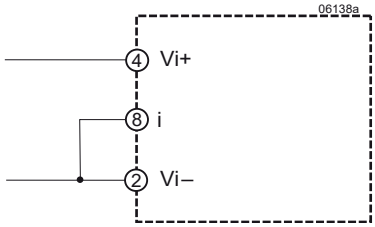

Fig. 18
If the inhibit pin is not used, connect it to Vi–.

Z: Open Frame

For applications, where the protection by a housing is not necessary or in the case that the motherboard should be lacquered after fitting the converter.

Note: The converters shall not be exposed to cleaning processes, as this will damage the glue of the ferrite cores.

G: RoHS-6

Converters with a type designation ending by G are RoHS-compliant for all six substances.

Non-G models are produced with leaded solder and are not RoHS-compliant. They are not preferred models.

NUCLEAR AND MEDICAL APPLICATIONS - These products are not designed or intended for use as critical components in life support systems, equipment used in hazardous environments, or nuclear control systems.

TECHNICAL REVISIONS - The appearance of products, including safety agency certifications pictured on labels, may change depending on the date manufactured. Specifications are subject to change without notice.