Linear Series

AC-DC Power Supplies

The Bel Power Solutions produces the industry's broadest selection of Linear power supplies with output voltages from 5 to 48 Volts. Rugged technology and proven design merge to create quiet, highly-regulated, dependable DC power.

The Linear power supplies are approved to domestic and international regulatory standards, and are CE Marked to the Low Voltage Directive (LVD).

RoHS Compliant

Key Features & Benefits

- RoHS compatible for all six substances
- Worldwide AC Input Capabilities:
- 100/120/220/230/240 VAC
- ±0.05% Output Regulation
- Low Output Ripple
- Mean Time Before Failure (MTBF) 300,000 Hours
- CE marked to Low Voltage Directive
- 100% Burn-In
- 2 Year Warranty
- Overvoltage Protection (OVP) Standard on 5 V Single Outputs, Optional for other outputs under 48 V

Applications

- Used in industrial and medical applications needing low noise/ripple – amplifiers, acoustic, broadcast, ATE and control equipment.

bel POWER SOLUTIONS & PROTECTION
a bel group

belfuse.com/power-solutions

Please read our datasheet & drawing disclaimer here.

1. OVERVOLTAGE PROTECTION OPTIONS

These optional overvoltage protection modules are offered for use with Linear Power Supplies. Each is user adjustable from 6.4 V to 34 V.

OVP-12G

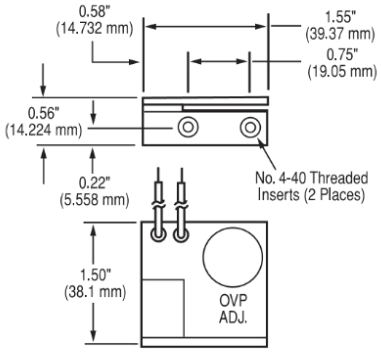

OVP-24G

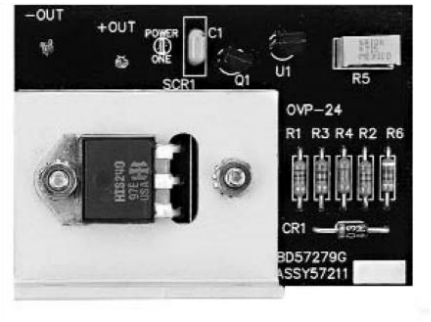

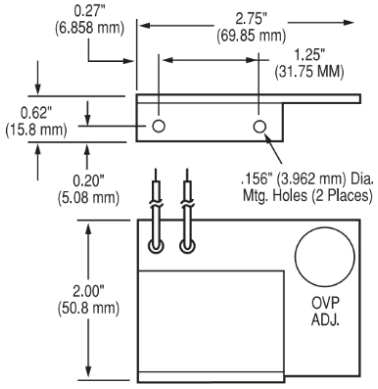

2. OVP SELECTION GUIDE

MODEL	CASE SIZE	OVP MODULES REQUIRED *
SINGLE OUTPUT	B, C, N, D	OVP-12G
	E, F	OVP-24G
DUAL OUTPUT	AA, B, BB, CC	OVP-12G protects both outputs
	E	OVP-24G protects both outputs
TRIPLE OUTPUT	AA, BAA, D CBB, 131 DBB, DCC	OVP-12G protects both 12 V through 15 V outputs
PEAK CURRENT MODELS	N, BAA, CBB 131	OVP-12G protects any output not provided with built-in OVP

* Outputs with factory built-in OVP are indicated in the Voltage/Current Rating Chart for each model. OVP is not available for 48 V models.

3. MODEL SELECTION – SINGLE OUTPUT

Model Input 100 to 264 VAC	Nominal Vout*	Max Amps	Case Type	Additional Features
5 Vout				
HA5-1.5/OVP-AG	5	1.5	B	A
HB5-3/OVP-AG	5	3	B	A, C
HC5-6/OVP-AG	5	6	C	A, C
HN5-9/OVP-AG	5	9	N	A, C
HD5-12/OVP-AG	5	12	D	A, C
HE5-18/OVP-AG	5	18	E	A, C
F5-25/OVP-AG	5	25	F	A, C, D, H
G5-35/OVP-AG	5	35	F	A, C, D, H
CP197-AG	5	50	F	A, C, D
12 to 15 Vout				
HA15-0.9-AG	12	0.9	B	
HB12-1.7-AG	12	1.7	B	C
HC12-3.4-AG	12	3.4	C	C
HN12-5.1-AG	12	5.1	N	C
HD12-6.8-AG	12	6.8	D	C
HE12-10.2-AG	12	10.2	E	C
F15-15-AG	12	16	F	C, D, H
HA15-0.9-AG	15*	0.9	B	
HB15-1.5-AG	15	1.5	B	C
HC15-3-AG	15	3	C	C
HN15-4.5-AG	15	4.5	N	C
HD15-6-AG	15	6	D	C
HE15-9-AG	15	9	E	C
F15-15-AG	15*	15	F	C, D, H

Model Input 100 to 264 VAC	Nominal Vout*	Max Amps	Case Type	Additional Features
24 to 28 Vout				
HA24-0.5-AG	24	0.5	B	
HB24-1.2-AG	24	1.2	B	C
HC24-2.4-AG	24	2.4	C	C
HN24-3.6-AG	24	3.6	N	C
HD24-4.8-AG	24	4.8	D	C
HE24-7.2-AG	24	7.2	E	C
F24-12-AG	24	12	F	C, D, H
HA24-0.5-AG	28*	0.5	B	
HB28-1-AG	28	1	B	C
HC28-2-AG	28	2	C	
HN28-3-AG	28	3	N	C
HD28-4-AG	28	4	D	C
HE28-6-AG	28	6	E	C
F24-12-AG	28*	10	F	C, D, H
48 Vout				
HB48-0.5-AG	48	0.5	B	
HC48-1-AG	48	1	C	
HD48-3-AG	48	3	D	C
HE48-4-AG	48	4	E	C

* May require jumpering or potentiometer adjustment.

Model numbers highlighted in yellow are not recommended for new designs or reached End-Of-Life (EOL) status.

Case Type	Dimensions	
	inches	millimeters
AA	6.50 x 4.00 x 2.10	165.10 x 101.60 x 53.34
B	4.87 x 4.00 x 2.10	123.70 x 101.60 x 53.34
BAA	10.25 x 4.00 x 2.95	260.35 x 101.60 x 74.93
BB	7.00 x 4.87 x 2.95	177.80 x 123.70 x 74.93
C	5.62 x 4.87 x 2.95	142.75 x 123.70 x 74.93
CBB	11.00 x 4.87 x 3.28	279.40 x 123.70 x 83.31
CC	9.38 x 4.87 x 3.28	238.25 x 123.70 x 83.31
CP131	11.00 x 4.87 x 3.28	279.40 x 123.70 x 83.31
D	9.00 x 4.87 x 3.28	228.60 x 123.70 x 83.31
DBB	14.25 x 4.87 x 3.38	361.95 x 123.70 x 85.85
DCC	15.00 x 4.88 x 4.55	381.00 x 123.95 x 115.57
E	14.00 x 4.87 x 3.53	355.60 x 123.70 x 89.66
F	16.75 x 4.88 x 5.00	425.50 x 123.95 x 127.00
N	7.00 x 4.87 x 3.28	177.80 x 123.70 x 83.31

Additional Features:

- A Overvoltage protection, set at 6.2 V ±0.4 V.
- B Non-adjustable 3-terminal regulator.
- C Remote sense provided.
- D With output inhibit & parallel operation master/slave capability.
- E With output inhibit.
- F Adjustable 3-terminal regulator.
- G Can be made into an isolated output by removing jumper W1.
- H Model requires 100 LFM forced-air cooling above 75% of rated output power at 50°C.

bel POWER SOLUTIONS & PROTECTION
a bel group

Asia-Pacific +86 755 298 85888
Europe, Middle East +353 61 49 8941
North America +1 866 513 2839

© 2022 Bel Power Solutions & Protection

Please read our datasheet & drawing disclaimer here.

4. MODEL SELECTION – DUAL OUTPUT

Model Input 100 to 264 VAC	Nominal Vout*	Max Amps	Case Type	Additional Features
5 to 15 Vout				
HAA5-1.5/OVP-AG	+5, –5	1.5, 1.5	AA	A
HBB5-3/OVP-AG	+5, –5	3, 3	BB	A
HCC5-6/OVP-AG	+5, –5	6, 6	CC	A, C
HAA512-AG	5, 12 to 15	2, 0.5	AA	A
HBB512-AG	5, 12 to 15	3, 1.25	BB	A, C
HCC512-AG	5, 12 to 15	6, 2.5	CC	A, C
HAA15-0.8-AG	+12, –5*	1, 0.4	AA	C
HBB15-1.5-AG	+12, –5*	1.7, 0.7	BB	C
HAD12-0.4-AG	+12, –12	0.4, 0.4	B	B
HAA15-0.8-AG	+12, –12	1, 1	AA	C
HBB15-1.5-AG	+12, –12	1.7, 1.7	BB	C
HCC15-3-AG	+12, –12	3.4, 3.4	CC	C
HDD15-5-AG	+12, –12*	5, 5	E	C
HAA15-0.8-AG	+12, –15*	1, 0.8	AA	C
HBB15-1.5-AG	+12, –15*	1.7, 1.5	BB	C
HCC15-3-AG	+12, –15*	3.4, 3	CC	C
HDD15-5-AG	+12, –15*	5, 5	E	C
HAA15-0.8-AG	+15, –5*	0.8, 0.4	AA	C
HBB15-1.5-AG	+15, –5*	1.5, 0.7	BB	C
HAA15-0.8-AG	+15, –12*	0.8, 1	AA	C
HBB15-1.5-AG	+15, –12*	1.5, 1.7	BB	C
HCC15-3-AG	+15, –12*	3, 3.4	CC	C
HDD15-5-AG	15, –12*	5, 5	E	C
15 to 24 Vout				
HAD15-0.4-AG	+15, –15	0.4, 0.4	B	B
HAA15-0.8-AG	+15, –15	0.8, 0.8	AA	C
HBB15-1.5-AG	+15, –15*	1.5, 1.5	BB	C
HCC15-3-AG	+15, –15*	3, 3	CC	C
HDD15-5-AG	+15, –15	5, 5	E	C
HAA24-0.6-AG	+24, –24	0.6, 0.6	AA	
HBB24-1.2-AG	+24, –24	1.2, 1.2	BB	
HCC24-2.4-AG	+24, –24	2.4, 2.4	CC	C

* May require jumpering or potentiometer adjustment.

Model numbers highlighted in yellow are not recommended for new designs or reached End-Of-Life (EOL) status.

Case Type	Dimensions	
	inches	millimeters
AA	6.50 x 4.00 x 2.10	165.10 x 101.60 x 53.34
B	4.87 x 4.00 x 2.10	123.70 x 101.60 x 53.34
BAA	10.25 x 4.00 x 2.95	260.35 x 101.60 x 74.93
BB	7.00 x 4.87 x 2.95	177.80 x 123.70 x 74.93
C	5.62 x 4.87 x 2.95	142.75 x 123.70 x 74.93
CBB	11.00 x 4.87 x 3.28	279.40 x 123.70 x 83.31
CC	9.38 x 4.87 x 3.28	238.25 x 123.70 x 83.31
CP131	11.00 x 4.87 x 3.28	279.40 x 123.70 x 83.31
D	9.00 x 4.87 x 3.28	228.60 x 123.70 x 83.31
DBB	14.25 x 4.87 x 3.38	361.95 x 123.70 x 85.85
DCC	15.00 x 4.88 x 4.55	381.00 x 123.95 x 115.57
E	14.00 x 4.87 x 3.53	355.60 x 123.70 x 89.66
F	16.75 x 4.88 x 5.00	425.50 x 123.95 x 127.00
N	7.00 x 4.87 x 3.28	177.80 x 123.70 x 83.31

Additional Features:

- A Overvoltage protection, set at 6.2 V ±0.4 V.
- B Non-adjustable 3-terminal regulator.
- C Remote sense provided.
- D With output inhibit and parallel operation master/slave capability.
- E With output inhibit.
- F Adjustable 3-terminal regulator.
- G Can be made into an isolated output by removing jumper W1.
- H Model requires 100 LFM forced-air cooling above 75% of rated output power at 50°C.

5. MODEL SELECTION – TRIPLE OUTPUT

Unsigned output voltages are isolated and can be used as either + or - polarities.

Model Input 100 to 264 VAC	Nominal Vout*	Max Amps	Case Type	Additional Features
5 to 24 Vout				
HTAA-16W-AG	+5, +12, –5*	2, 0.4, 0.4	AA	A
HBAA-40W-AG	5, +12, –5*	3, 1, 0.4	BAA	A, C
HCAA-60W-AG	+5, +12, –5*	6, 1, 0.4	D	A, C
HCBB-75W-AG	5, +12, –5*	6, 1.7, 0.7	CBB	C
CP131-AG	5, +12, –5*	8, 1.7, 0.7	CP131	A, C
HDBB-105W-AG	5, +12, –5*	12, 1.7, 0.7	DBB	A, C
HTAA-16W-AG	5, +12, –12	2, 0.4, 0.4	AA	A
HBAA-40W-AG	5, +12, –12	3, 1, 1	BAA	A, C
HCAA-60W-AG	+5, +12, –12	6, 1, 1	D	A, C
HCBB-75W-AG	5, +12, –12	6, 1.7, 1.7	CBB	C
CP131-AG	5, +12, –12	8, 1.7, 1.7	CP131	A, C
HDBB-105W-AG	5, +12, –12	12, 1.7, 1.7	DBB	C
HDCC-150W-AG	5, +12, –12	12, 3.4, 3.4	DCC	A, C
HTAA-16W-AG	5, +12, –15*	2, 0.4, 0.4	AA	A
HBAA-40W-AG	5, +12, –15*	3, 1, 0.8	BAA	A, C
HCAA-60W-AG	+5, +12, –15*	6, 1, 1	D	A, C
HCBB-75W-AG	5, +12, –15*	6, 1.7, 1.5	CBB	C
CP131-AG	5, +12, –15	8, 1.7, 1.5	CP131	A, C
HDBB-105W-AG	5, +12, –15*	12, 1.7, 1.5	DBB	C
HDCC-150W-AG	5, +12, –15	12, 3.4, 3	DCC	A, C
HTAA-16W-AG	5, +15, –5*	2, 0.4, 0.4	AA	A
HBAA-40W-AG	5, +15, –5*	3, 0.8, 0.4	BAA	A, C
HCAA-60W-AG	+5, +15, –5*	6, 1, 0.4	D	A, C
HCBB-75W-AG	5, +15, –5*	6, 1.5, 0.7	CBB	C
CP131-AG	5, +15, –5*	8, 1.5, 0.7	CP131	A,
HDBB-105W-AG	5, +15, –5*	12, 1.5, 0.7	DBB	C
HTAA-16W-AG	5, +15, –12*	2, 0.4, 0.4	AA	A
HBAA-40W-AG	5, +15, –12*	3, 0.8, 1	BAA	A, C
HCAA-60W-AG	+5, +15, –12*	6, 1, 1	D	A, C
HCBB-75W-AG	5, +15, –12*	6, 1.5, 1.7	CBB	C
CP131-AG	5, +15, –12	8, 1.5, 1.7	CP131	A, C
HDBB-105W-AG	5, +15, –12*	12, 1.5, 1.7	DBB	C
HDCC-150W-AG	5, +15, –12	12, 3, 3.4	DCC	A, C
HTAA-16W-AG	5, +15, –15*	2, 0.4, 0.4	AA	A
HBAA-40W-AG	5, +15, –15*	3, 0.8, 0.8	BAA	A, C
HCAA-60W-AG	+5, +15, –15*	6, 1, 1	D	A, C
HCBB-75W-AG	5, +15, –15*	6, 1.5, 1.5	CBB	C
CP131-AG	5, +15, –15	8, 1.5, 1.5	CP131	A, C
HDBB-105W-AG	5, +15, –15*	12, 1.5, 1.5	DBB	C
HDCC-150W-AG	5, +15, –15	12, 3, 3	DCC	A, C

Case Type	Dimensions	
	inches	millimeters
AA	6.50 x 4.00 x 2.10	165.10 x 101.60 x 53.34
B	4.87 x 4.00 x 2.10	123.70 x 101.60 x 53.34
BAA	10.25 x 4.00 x 2.95	260.35 x 101.60 x 74.93
BB	7.00 x 4.87 x 2.95	177.80 x 123.70 x 74.93
C	5.62 x 4.87 x 2.95	142.75 x 123.70 x 74.93
CBB	11.00 x 4.87 x 3.28	279.40 x 123.70 x 83.31
CC	9.38 x 4.87 x 3.28	238.25 x 123.70 x 83.31
CP131	11.00 x 4.87 x 3.28	279.40 x 123.70 x 83.31
D	9.00 x 4.87 x 3.28	228.60 x 123.70 x 83.31
DBB	14.25 x 4.87 x 3.38	361.95 x 123.70 x 85.85
DCC	15.00 x 4.88 x 4.55	381.00 x 123.95 x 115.57
E	14.00 x 4.87 x 3.53	355.60 x 123.70 x 89.66
F	16.75 x 4.88 x 5.00	425.50 x 123.95 x 127.00
N	7.00 x 4.87 x 3.28	177.80 x 123.70 x 83.31

Additional Features:

A Overvoltage protection, set at 6.2 V ±0.4 V.
B Non-adjustable 3-terminal regulator.
C Remote sense provided.
D With output inhibit and parallel operation master/slave capability.
E With output inhibit.
F Adjustable 3-terminal regulator.
G Can be made into an isolated output by removing jumper W1.
H Model requires 100 LFM forced-air cooling above 75% of rated output power at 50°C.

* May require jumpering or potentiometer adjustment.
Model numbers highlighted in yellow are not recommended for new designs or reached End-Of-Life (EOL) status.

bel POWER SOLUTIONS & PROTECTION
a bel group

Asia-Pacific +86 755 298 85888
Europe, Middle East +353 61 49 8941
North America +1 866 513 2839

© 2022 Bel Power Solutions & Protection

Please read our datasheet & drawing disclaimer here.

6. INPUT SPECIFICATIONS

PARAMETER	CONDITIONS / DESCRIPTION		MIN	NOM	MAX	UNITS
AC Input Voltage [1, 2]	Jumper selectable, shipped factory configured for 120 VAC operation. All models must be externally fused for proper operation. Fuse ratings are marked on each unit. Consult factory for each unit's fuse requirements.	100 VAC Tap	87	100	110	VAC
		120 VAC Tap	104	120	132	
		220 VAC Tap	191	220	242	
		240 VAC Tap	209	240	264	
Input Frequency	AC input.		47		63	Hz
Line Regulation	Output voltage charge for a 10% line change: F case models.		-0.01		+0.01	%
	HAD12, HAD15.		-1.0		+1.0	
	Outputs with adjustable three terminal regulators.		-0.5		+0.5	
	All other models.		-0.05		+0.05	

7. OUTPUT SPECIFICATIONS

PARAMETER	CONDITIONS / DESCRIPTION	MIN	NOM	MAX	UNITS
Output Adjustment	Minimum output adjustment range [3]	-5		+5	%
Efficiency	5 volt outputs.		45		%
	12 volt and 15 volt outputs.		55		
	24 volt and higher outputs.		60		
Ripple and Noise [4]	F case models.			3.0	mV_{PK-PK}
	5 volt, 12 volt, and 15 volt models.			5.0	mV_{PK-PK}
	All three terminal regulator outputs.			0.2	$\%_{PK-PK}$
	24 volt through 48 volt models.		3.0 mV_{PK-PK} plus 0.02% of output voltage, max		
Load Regulation	Output change for a 50% load change: F case models.	-0.02		+0.02	%
	HAD12, HAD15.	-1		+1	
	Outputs with adjustable three terminal regulators.	-0.5		+0.5	
	All other models.	-0.05		+0.05	
Transient Response	Recovery time, to within 1% of initial set point due to a 50% load change.			50	µs

[1] Derate output current 10% for 50Hz operation.
[2] Input voltage tolerance for 230 VAC operation is +15%, -10%.
[3] Output voltage adjustments can be made to within ±5% of factory setting of nominal output voltage. Locate the "Vadj" potentiometer on the power supply PCB and use a screwdriver to adjust the output pot. The HAD12 and HAD15 3 terminal regulator outputs are not adjustable.
[4] Full load, 20 MHz bandwidth.

8. SAFETY, REGULATORY AND EMI SPECIFICATIONS

PARAMETER	CONDITIONS / DESCRIPTION	MIN	NOM	MAX	UNITS
Agency Approvals	Approved to the latest edition of the following standards; UL/CSA 60950-1 and IEC/EN 62368-1				
Dielectric Withstand Voltage	Input to case Input to output (tested by manufacturer only)	2121 4242			VDC
Electromagnetic	FCC CFR title 47 Part 15 Sub-Part B - conducted.				
Interference	EN 55022 / CISPR 22 conducted. EN 55022 / CISPR 22 radiated.	Compatible with system compliance to Level B.			
Leakage Current	Per EN 62368-1 (264 VAC)		23	50	µA

9. SIGNALS AND INTERNAL PROTECTION

PARAMETER	CONDITIONS / DESCRIPTION	MIN	NOM	MAX	UNITS
Overvoltage Protection	Provided on 5 V output units where indicated. Other outputs may use optional overvoltage protectors OVP-12 and OVP-24.	5.8		6.6	V
Remote Sense	Total voltage compensation for cable losses with respect to the main output. Provided on models where indicated.			250	mV
Overcurrent/Short Circuit Protection	Automatic current limit/foldback. Rated as a percentage of output power.	115	120	140	%
Master/Slave Operation	For parallel operation of up to 6 units. Master/slave pin provided on F case models only. Contact factory for application notes.				

10. ENVIRONMENTAL SPECIFICATIONS

PARAMETER	CONDITIONS/DESCRIPTION		MIN	NOM	MAX	UNITS
Operating Temperature	Derate output power linearly above 50°C by 3% per °C.	@ 100% load	0		50	°C
		@ 40% load			70	°C
Storage Temperature			-40		85	°C
Temperature Coefficient	0°C to 50°C (after 15-minute warm-up).			0.1	0.3	%/°C
	24 hours after warm-up.		-0.3		+0.3	%
Shock	Operating.				20	G_{PK}
Vibration	Random vibration from 10 Hz to 2 kHz, 3 axis.				6.15	G_{RMS}
Relative Humidity	Non-Condensing.		5		95	%RH

© 2022 Bel Power Solutions & Protection

Please read our datasheet & drawing disclaimer here.

AA CASE

OVERALL SIZE
6.50" x 4.00" x 2.10"
(165.10 mm) x (101.60 mm) x (53.34 mm)

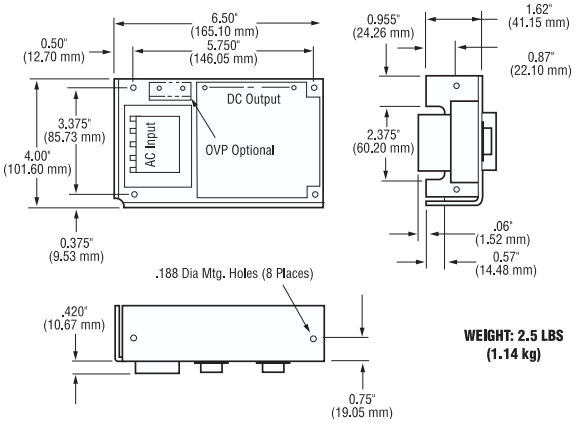

WEIGHT: 2.5 LBS
(1.14 kg)

BAA CASE

OVERALL SIZE
10.25" x 4.00" x 2.95"
(260.35 mm) x (101.60 mm) x (74.93 mm)

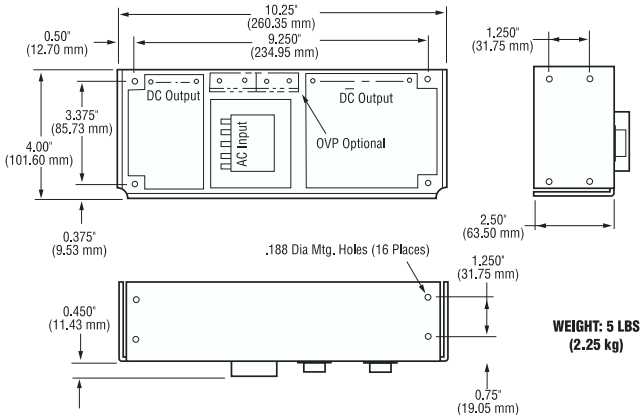

WEIGHT: 5 LBS
(2.25 kg)

B CASE

OVERALL SIZE
4.87" x 4.00" x 2.10"
(123.70 mm) x (101.60 mm) x (53.34 mm)

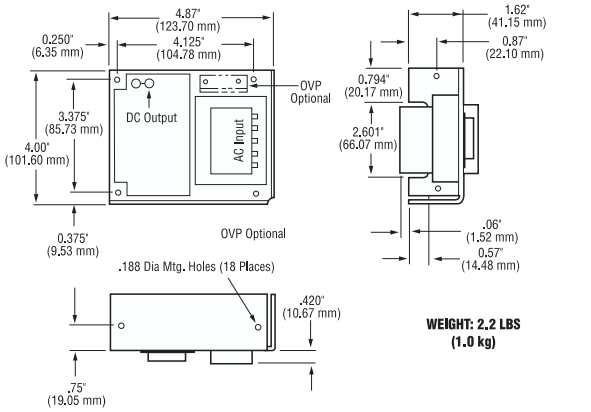

WEIGHT: 2.2 LBS
(1.0 kg)

C CASE

OVERALL SIZE
5.62" x 4.87" x 2.95"
(142.75 mm) x (123.70 mm) x (74.93 mm)

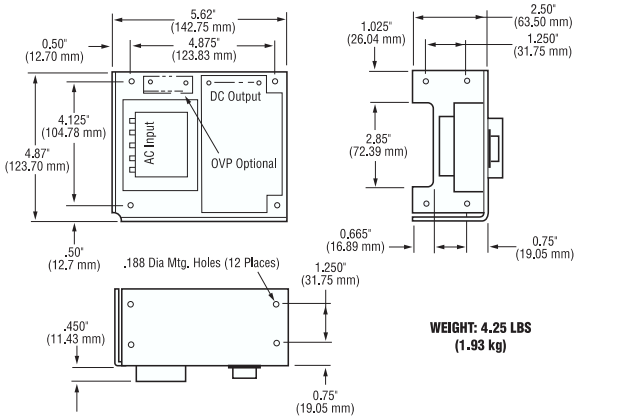

WEIGHT: 4.25 LBS
(1.93 kg)

BB CASE

OVERALL SIZE
7.00" x 4.87" x 2.95"
(177.80 mm) x (123.70 mm) x (74.93 mm)

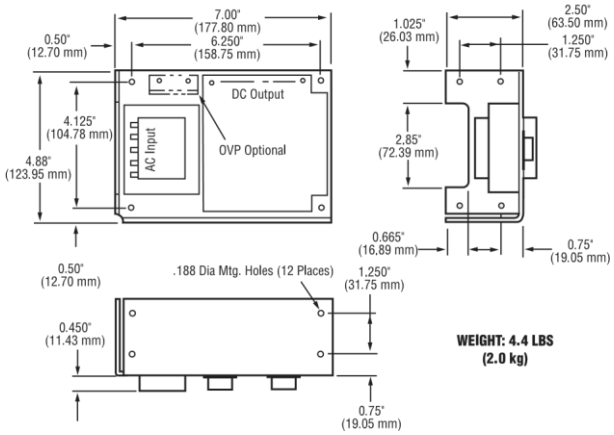

WEIGHT: 4.4 LBS
(2.0 kg)

CC CASE

OVERALL SIZE
9.38" x 4.87" x 3.28"
(238.25 mm) x (123.70 mm) x (83.31 mm)

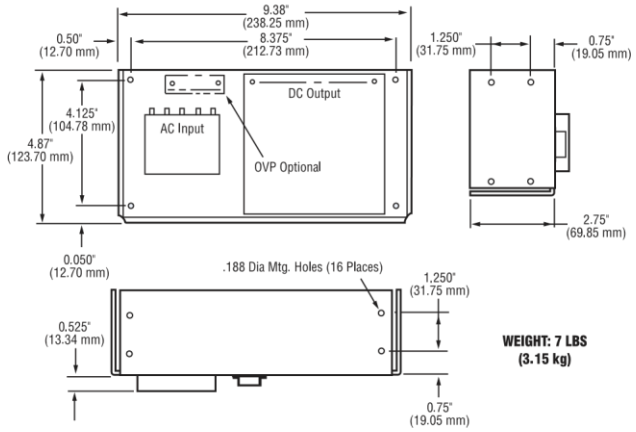

WEIGHT: 7 LBS
(3.15 kg)

CBB CASE

OVERALL SIZE
11.00" x 4.87" x 3.28"
(279.40 mm) x (123.70 mm) x (83.31 mm)

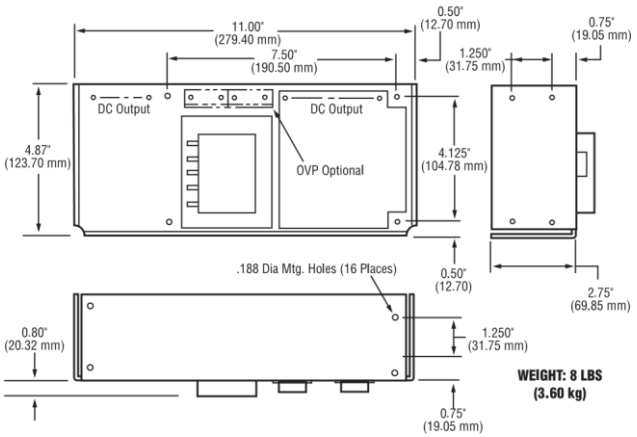

WEIGHT: 8 LBS
(3.60 kg)

DCC CASE

OVERALL SIZE
15.00" x 4.88" x 4.55"
(381.00 mm) x (123.95 mm) x (115.57 mm)

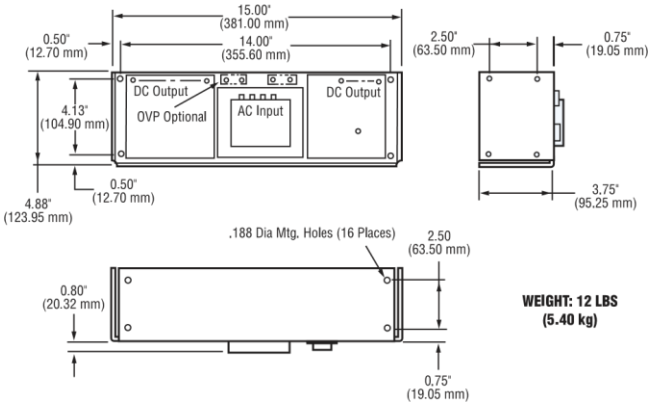

WEIGHT: 12 LBS
(5.40 kg)

D CASE

OVERALL SIZE
9.00" x 4.87" x 3.28"
(228.60 mm) x (123.70 mm) x (83.31 mm)

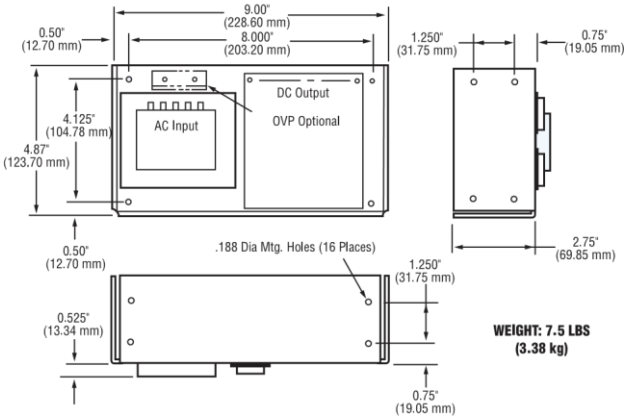

WEIGHT: 7.5 LBS
(3.38 kg)

E CASE

OVERALL SIZE
14.00" x 4.87" x 3.53"
(355.60 mm) x (123.70 mm) x (89.66 mm)

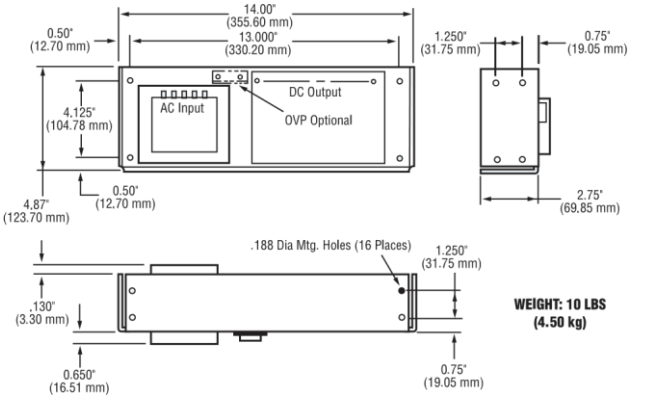

WEIGHT: 10 LBS
(4.50 kg)

DBB CASE

OVERALL SIZE
14.25" x 4.87" x 3.38"
(361.95 mm) x (123.70 mm) x (85.85 mm)

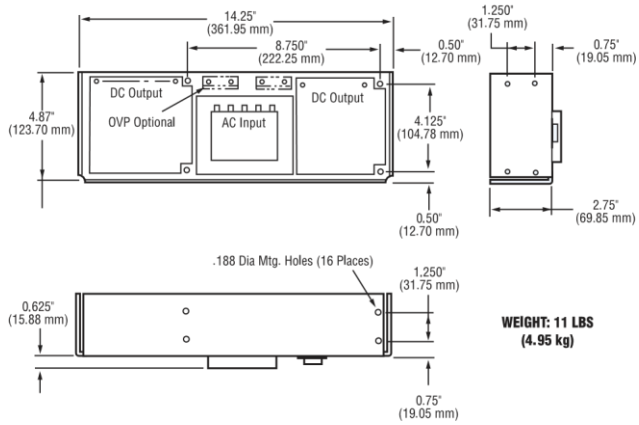

WEIGHT: 11 LBS
(4.95 kg)

F CASE

OVERALL SIZE
16.75" x 4.88" x 5.00"
(425.5 mm) x (123.95 mm) x (127.00 mm)

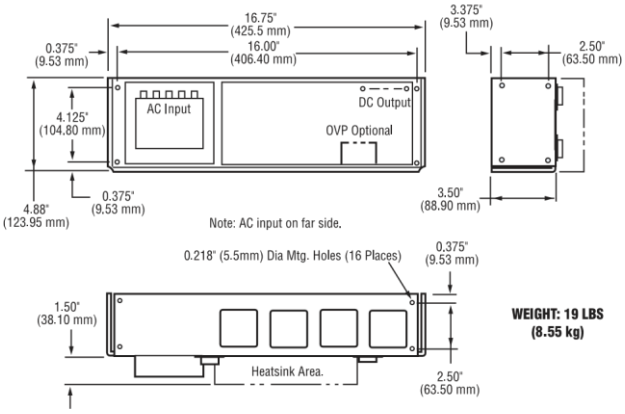

WEIGHT: 19 LBS
(8.55 kg)

bel POWER SOLUTIONS & PROTECTION
a bel group

Asia-Pacific +86 755 298 85888
Europe, Middle East +353 61 49 8941
North America +1 866 513 2839

© 2022 Bel Power Solutions & Protection BCD.00650_AE

Please read our datasheet & drawing disclaimer here.

N CASE

OVERALL SIZE
7.00" x 4.87" x 3.28"
(177.80 mm) x (123.70 mm) x (83.31 mm)

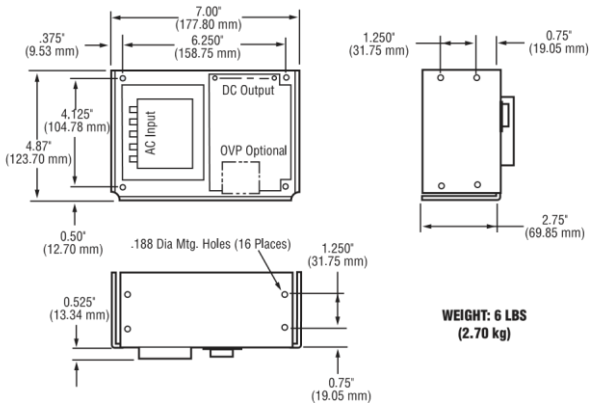

WEIGHT: 6 LBS
(2.70 kg)

CP510-A CASE

OVERALL SIZE
8.25" x 4.87" x 3.28"
(209.55 mm) x (123.70 mm) x (83.31 mm)

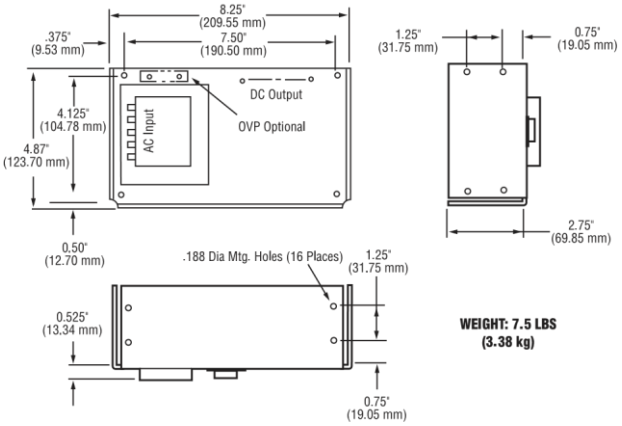

WEIGHT: 7.5 LBS
(3.38 kg)

CP131 CASE

OVERALL SIZE
11.00" x 4.87" x 3.28"
(279.40 mm) x (123.70 mm) x (83.31 mm)

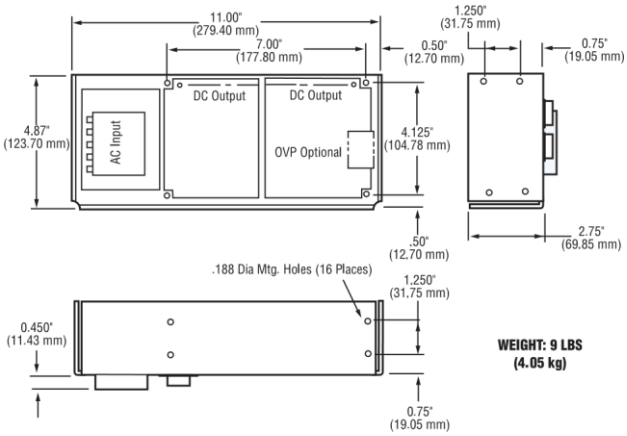

WEIGHT: 9 LBS
(4.05 kg)

Mechanical Dimensions of Case Types

For more information on these products consult: tech.support@psbel.com

NUCLEAR AND MEDICAL APPLICATIONS - Products are not designed or intended for use as critical components in life support systems, equipment used in hazardous environments, or nuclear control systems.
TECHNICAL REVISIONS - The appearance of products, including safety agency certifications pictured on labels, may change depending on the date manufactured. Specifications are subject to change without notice.