IMX70 / IMY70 Series

70 to 90 Watt DC-DC Converters

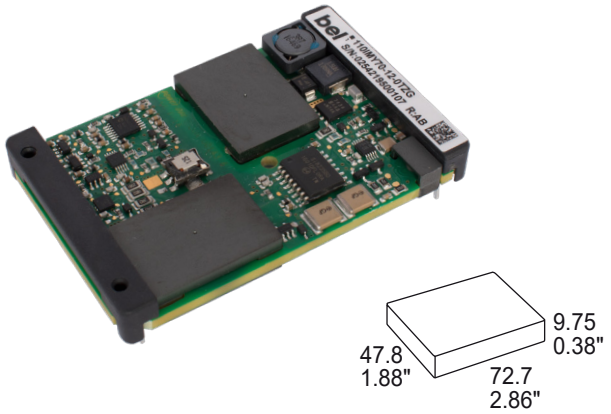

[1] 110IMY70

The IMX/IMY70 Series of board-mountable 70 Watt DC-DC converters has been designed according to the latest industry requirements and standards. The converters are particularly suitable for use in mobile or stationary applications in transport, railways, industry, or telecommunication, where variable input voltages or high transient voltages are prevalent.

Covering 24, 72, 96 & 110 V battery voltages with 2 different models, the converters are available with one or two electrically isolated outputs from 5 V to 48 V, externally adjustable and with flexible load distribution. A shutdown input allows remote converter on/off. Features include consistently high efficiency over the entire input voltage range, high reliability, and excellent dynamic response to load and line changes.

Features

- RoHS-compliant for all six substances
- 5 year warranty
- Extremely wide input voltage ranges up to 154 VDC
- 1 or 2 isolated outputs up to 48 V
- Basic insulation: IMX models
- Class I equipment with reinforced insulation: IMY models
- 1500 to 3000 VAC i/o electric strength test voltage
- Programmable input undervoltage lockout
- Shutdown / inhibit input
- Adjustable output voltages with flexible load distribution
- Sense lines and current share option
- External frequency synchronization
- Output(s) no-load, overload, and short-circuit proof
- Operating ambient temperature from –40 to 95 °C
- Thermal protection
- Planar technology for best stability
- Metal case (12.5 mm high) or open frame with 9.75 mm profile
- Safety-approved to the latest edition of IEC/EN 60950-1 and UL/CSA 60950-1
- CE mark for 110IMY70

Table of Contents Page

Description....1
Model Selection....2
Functional Description....3
Electrical Input Data....4
Electrical Output Data....6
Auxiliary Functions....10
Electromagnetic Compatibility (EMC)....12
Immunity to Environmental Conditions....13
Mechanical Data....14
Safety and Installation Instructions....15
Options....17

IMX70 / IMY70 Series

70 - 90 W DC-DC Converters

MELCHER™

Description

The converters are designed according to the international safety standards IEC/EN/UL 60950-1 2nd Edition. The 24IMX70 converters exhibit basic insulation for the specified input voltage, whereas the 110IMY70 converters have reinforced insulation.

The circuit is comprised of 2 planar magnetic devices. The components are automatically assembled and securely soldered onto a single PCB without any wire connection. Magnetic feedback ensures maximum repeatability in the control loop over all operating conditions and best reliability. Careful consideration of possible thermal stress ensure the absence of hot spots, such providing long life in environments, where temperature cycles are present. The thermal design without using any potting material allows operation up to an ambient temperature of 70 °C in free air and up to 100 °C with forced cooling. For extremely high vibration environments the case has holes for screw mounting.

Model Selection

Table 1: Model Selection

Output 1		Output 2		Input voltage			Efficiency η [1]		Model	Options
$V_{o\,nom}$ [V]	$I_{o\,nom}$ [A]	$V_{o\,nom}$ [V]	$I_{o\,nom}$ [A]	$V_{i\,min}$ [2] [V]	$V_{i\,cont}$ [V]	$V_{i\,max}$ [2] [V]	min [%]	typ [%]		
5.1	12	-	-	43.2	50 to 137.5	154	89.5	91	110IMY70-05-0TG	i, Z
12	7.0	-	-	12	15 to 33.6	40.1	91	93	24IMX70-12-0TG	i, Z
12	7.5	-	-	43.2	50 to 137.5	154	90	93	110IMY70-12-0TG	
15	5.7	-	-	12	15 to 33.6	40.1	91	92	24IMX70-15-0TG	i, Z
15	6.0	-	-	43.2	50 to 137.5	154	90	93	110IMY70-15-0TG	
24	1.3	24	1.3	12	15 to 33.6	40.1	87	90	24IMX70-24-24-0G	i, Z
24	1.3	24	1.3	43.2	50 to 137.5	154	89	91	110IMY70-24-24-0G	

[1] Efficiency at T_A = 25 °C, $V_{o\,nom}$, $I_{o\,nom}$
[2] Short time; see table 2 for details

Part Number Description

110 IMY70 - 24 - 24 0 i Z G

Input voltage V_i
- 24 V battery 24
- 72 V, 96 V, 110 V battery 110

Series IMX70, IMY70

Output voltage of output 1 ..... 05, 12, 15, 24

Output voltage of output 2 ..... 05, 12, 15, 24

Operating ambient temperature range
- T_A = –40 to 95 °C ..... -0

Options:
- Inhibit i
- Current sharing function ..... T[1]
- Open frame ..... Z

Feature:
- RoHS-compliant for all 6 substances ..... G[2]

[1] Standard feature for single-output models, not available for dual-output models
[2] G is standard and is placed at the end of the part number

Note: The sequence of options must follow the order above.

Product Marking

Converters without option Z are marked with the type designation, input and output voltages and currents, applicable safety approval and recognition marks, company logo, date code, and serial no.

Functional Description

The IMX/IMY70 Series converters are comprised of a feedback-controlled forward converter using current-mode pulse width modulation (PWM). The switching frequency is fixed; it can by externally synchronized for double-output models. The main transformer and the output choke are designed in planar technology, which guarantees excellent mechanical features and reproducibility of electric properties. No optocouplers are used.

Single-output converters exhibit at the output a synchronous rectifier and sense lines to ensure accurate output voltage regulation. An auxiliary input R allows adjustment of the output voltage. Proper parallel operation is possible using the current sharing feature.

Double-output converters exhibit Schottky diodes at both outputs. The first output voltage is sensed and accurately regulated by influencing the PWM via the magnetic feedback.

The output voltage is transferred to the primary side by magnetic feedback via a pulse transformer. The 2nd output is tracking. The close magnetic coupling of the main transformer and the main choke guarantee minor deviation of both output voltages. Both outputs can be simultaneously adjusted by the R input located on the secondary side.

A current limitation circuits limits the possible output power. The topology allows for single-output models an unlimited output capacity and for double-output models a high output capacity; see *Electrical Output Data*.

An incorporated protection disables the converter in an overtemperature condition. The converter automatically recovers, after the temperature has dropped below the limit.

The input voltage is monitored, shutting down the converter in an overvoltage condition. The minimum input voltage for startup can be externally adjusted, which helps to limit the input current at low input voltage.

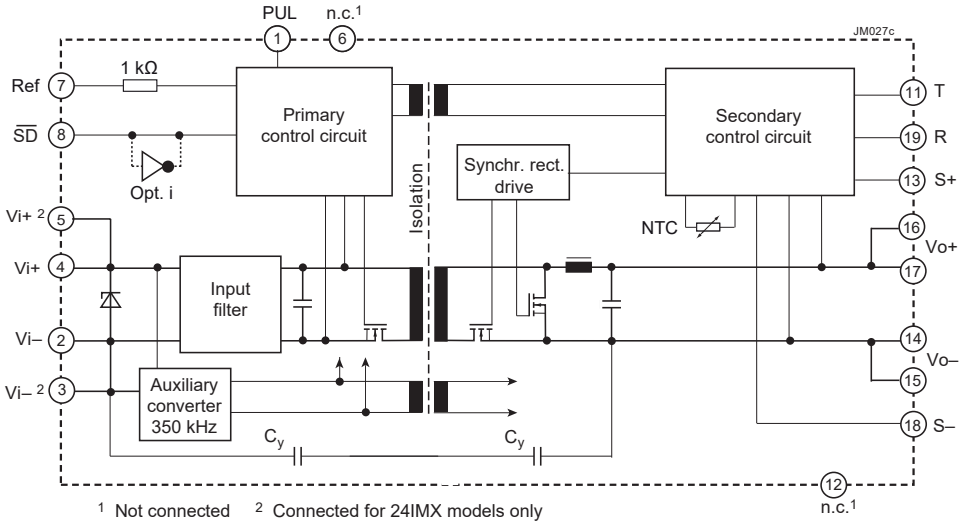

Fig. 1
Block diagram of single-output models

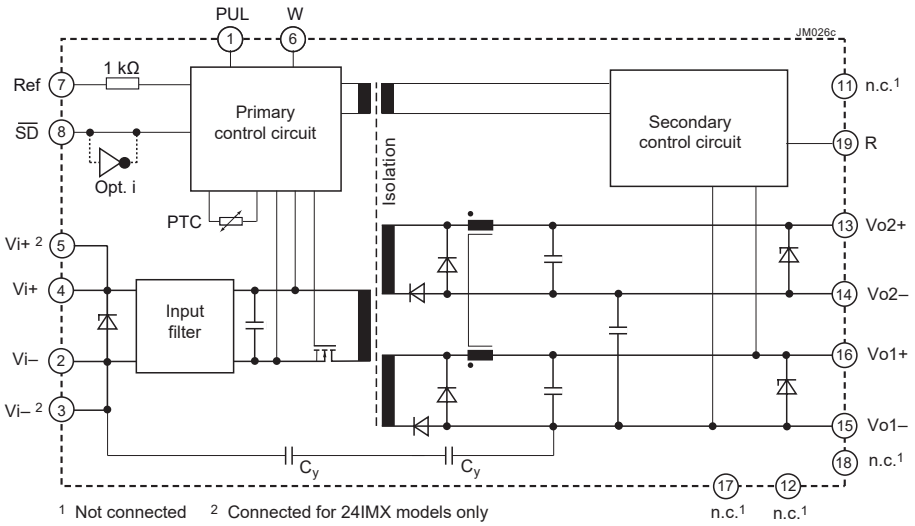

Fig. 2
Block diagram of double-output models

Electrical Input Data

General conditions:

- T_A = 25 °C, shutdown and R pin left open-circuit, unless specified.

Table 2: Input data

Model				24IMX70			110IMY70			Unit
Characteristics			Conditions	min	typ	max	min	typ	max	
V_i	Operating input voltage		$T_{A\,min}$ to $T_{A\,max}$, $I_o = 0 - I_{o\,nom}$	15 [1]		33.6	50		137.5	VDC
$V_{i\,nom}$	Nominal input voltage				24			(72, 96), 110		
$V_{i\,2s}$	Temporary input voltage		For 2 s, no shutdown	12 [1]		40.1	43.2 [1]		154	
$V_{i\,sur}$	Repetitive surge voltage		Shutdown, no damage			50			168	
$t_{start\text{-}up}$	Converter start-up time	Switch on	Worst case condition at $V_{i\,min}$ and full load			500		250	500	ms
		$\overline{SD}$ high				500			500	
t_{rise}	Rise time		$V_i = 0 \rightarrow V_{i\,nom}$, $I_{o\,nom}$			25			25	
$I_{i\,o}$	No-load input current		$I_o = 0$, $V_{i\,min} - V_{i\,max}$		200			25	50	mA
I_{irr}	Reflected ripple current		$I_o = 0 - I_{o\,nom}$			30			200	mA_{pp}
$I_{inr\,p}$	Inrush peak current		$V_i = V_{i\,max}$		25			35		A
C_i	Input capacitance		For surge calculation		24			7.7		µF
$V_{\overline{SD}}$	Shutdown voltage		Converter disabled		– 0.7 to +0.7			– 0.7 to +0.7		V
			Converter operating		2 to 20 (or open-circuit)			2 to 20 (or open-circuit)		
$I_{\overline{SD}}$	Shutdown pin current				– 0.2			– 0.2		mA
$I_{i\,\overline{SD}}$	Input current at shutdown		$V_{i\,min} - V_{i\,max}$			2			2	
f_s	Switching frequency		$V_{i\,min} - V_{i\,max}$, $I_o = 0 - I_{o\,nom}$		200 [2]	210 [2]		200 [2]	210 [2]	kHz

[1] $V_{i\,min}$ will not be as stated, if V_o is increased above $V_{o\,nom}$ by use of R-input. If the output voltage is set to a higher value, $V_{i\,min}$ will be proportionately increased.
[2] Typ. 240 kHz for single-output models, typ. 300 kHz for models with 5 V output

Inrush Current

The inrush current has been kept as low as possible by choosing a very small input capacitance. A series resistor may be installed in the input line, in order to further reduce this current.

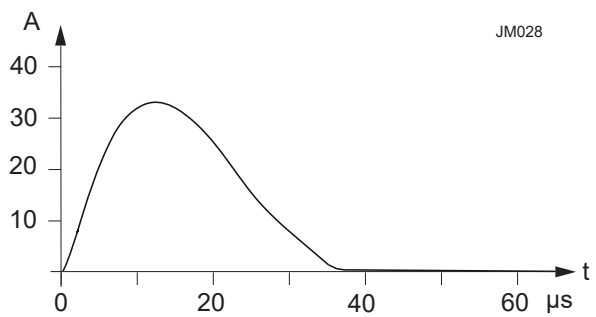

Fig. 3
Inrush current at $V_{i\,nom}$, $P_{o\,nom}$ versus time (110IMY70-24-24-8). Source impedance according to ETS 300132-2: L = 10 µH, R = 1.5 Ω.

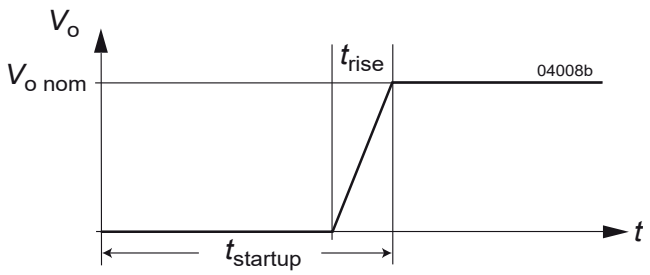

Fig. 4
Converter start-up and rise time

Reverse Polarity Protection and Fuse

The built-in suppressor diode also provides for reverse polarity protection at the input by conducting current in the reverse direction. An external fuse is required to limit this current.

Table 3: Recommended external fuses in the non-earthed input line

Converter model	Fuse type	Rating
24IMX70 single-output	Littlefuse 166	10 A, 80 V
24IMX70 double-output	Littlefuse 166	10 A, 80 V
110IMY70 single-output	Littlefuse 372	3.15 A, 250 V
110IMY70 double-output	Littlefuse 372	3.15 A, 250 V

Input Transients Protection

When V_i exceeds 154 V, the converter is temporarily disabled. Furthermore, a built-in suppressor diode provides effective protection against higher input transients, which may be generated for example by short-circuits across the input lines.

Table 4: Built-in transient voltage suppressor

Model	Breakdown voltage $V_{Br\ nom}$ [V]	Peak power at 1 ms P_p [kW]	Peak pulse current I_{pp} [A]
24IMX70	56	1.5	19.4
110IMY70	176	0.6	2.5

For very high energy transients as for example to achieve IEC/EN 61000-4-5 compliance (as per table *Electromagnetic Immunity*) an external inductor and capacitor are required. The components should have similar characteristics as listed in table below.

Table 5: Components for external circuitry to comply with IEC/EN 61000-4-5; see table 10

Model	Inductor (L)	Capacitor (C)
24IMX70	---	330 µF / 100 V
110IMY70	---	150 µF / 200 V

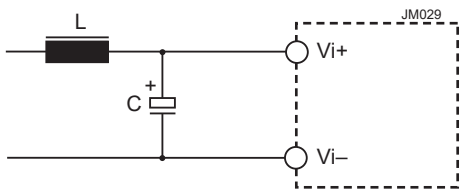

Fig. 5
Example for external circuitry to comply with IEC/EN 61000-4-5; see table 10

Electrical Output Data

General conditions:

- T_A = 25 °C, unless T_C is specified
- Shutdown pin not connected
- R-pin not connected

Table 6: Output data for single-output models

Output				5.1 V			12 V			Unit
Characteristics			Conditions	min	typ	max	min	typ	max	
V_o	Output voltage		$V_{i\,nom}$, 0.5 $I_{o\,nom}$	5.07	5.1	5.13	11.94	12.0	12.06	V
$I_{o\,nom}$	Output current	24IMX	$V_{i\,min} - V_{i\,max}$					7.0		A
		110IMY			12			7.5		
$I_{o\,L}$	Current limit [1]	24IMX	$V_{i\,nom}$, T_C = 25 °C				7.5	8.0	8.5	
		110IMY	V_o = 93% $V_{o\,nom}$	13.6	13.9	14.4	8.5	8.8	9.2	
ΔV_o	Line / load regulation		$V_{i\,min} - V_{i\,max}$ (0.1 – 1) $I_{o\,nom}$			±0.5			±0.5	%
V_{noise}	Output voltage noise		$V_{i\,min} - V_{i\,max}$ [2]			100			150	mV_{pp}
			$I_o = I_{o\,nom}$ [3]			50			80	
$V_{o\,OS}$	Output overshot at turn-on		$V_{i\,min} - V_{i\,max}$			0.1			0.24	V
$V_{o\,L}$	Output overvoltage limit		Min. load 1%	6.0		7.0	13.5		15	
$C_{o\,ext}$	Capacitive load				unlimited			unlimited		µF
$V_{o\,d}$	Dynamic load regulation	Voltage deviation	$V_{i\,nom}$, (0 ↔ 0.5) $I_{o\,nom}$		±1000 [4]			±1800 [5]		mV
t_d		Recovery time	or (0.1 ↔ 0.6) $I_{o\,nom}$		2			2		ms
a_{Vo}	Temperature coefficient $\Delta V_o / \Delta T_C$		$V_{i\,min} - V_{i\,max}$ I_o = (0.1 to 1) $I_{o\,nom}$			±0.02			±0.02	%/K

[1] Rectangular characteristic V_o/I_o
[2] BW = 20 MHz, measured with an external capacitor of 1 µF across each pair of output pins.
[3] Measured with a probe according to EN 61204
[4] With an output cap C_o = 2200 µF: ±250 mV
[5] With an output cap C_o = 1500 µF: ±600 mV

Table 7: Output data for single- and double-output models; general condition as per table 6.

Output				15 V			2 x 24 V			Unit
Characteristics			Conditions	min	typ	max	min	typ	max	
V_o	Output voltage		$V_{i\,nom}$, 0.5 $I_{o\,nom}$	14.93	15.0	15.08	23.88	24.0	24.12	V
$I_{o\,nom}$	Output current	24IMX	$V_{i\,min} - V_{i\,max}$		5.7			2 x 1.3		A
		110IMY			6.0			2 x 1.3		
$I_{o\,L}$	Current limit [1]	24IMX	$V_{i\,nom}$, T_C = 25 °C	6.2		7.0	3.0	3.15	3.3	
		110IMY	V_o = 93% $V_{o\,nom}$	6.6		7.5	3.0	3.15	3.3	
ΔV_o	Line / load regulation		$V_{i\,min} - V_{i\,max}$ (0.1 – 1) $I_{o\,nom}$			±0.5			±0.5	%
V_{noise}	Output voltage noise		$V_{i\,min} - V_{i\,max}$ [2]			150			200	mV_{pp}
			$I_o = I_{o\,nom}$ [3]			100			150	
$V_{o\,OS}$	Output overshot at turn-on		$V_{i\,min} - V_{i\,max}$			0.3			0.48	V
$V_{o\,L}$	Output overvoltage limit		Min. load 1%	16.8		18		[4]		
$C_{o\,ext}$	Capacitive load				unlimited		0		1500 [6, 7]	µF
$V_{o\,d}$	Dynamic load regulation	Voltage deviation	$V_{i\,nom}$, (0 ↔ 0.5) $I_{o\,nom}$		±1500 [5]			±1500		mV
t_d		Recovery time	or (0.1 ↔ 0.6) $I_{o\,nom}$		2			2		ms
a_{Vo}	Temperature coefficient $\Delta V_o / \Delta T_C$		$V_{i\,min} - V_{i\,max}$ I_o = (0.1 to 1) $I_{o\,nom}$			±0.02			±0.02	%/K

1 The current limit is primary side controlled. In an overload condition the thermal protection may cause the converter to shut down (automatic restart on cool-down).
2 BW = 20 MHz, measured with an external capacitor of 1 µF across each output pins.
3 Measured with a probe according to EN 61204
4 Both outputs of double-output models are protected by a suppressor diode.
5 With an output cap C_o = 1500 µF: ±750 mV
6 Both outputs of double-output models connected in parallel. For series connection, only $^1/_4$ of the capacitance is possible.
7 1000 µF for 110IMY70-24-24 produced before 2012

Thermal Considerations

Fig. 6a and 6b specify the admissible output power of a converter, mounted on a printed circuit board, located in free environment, exposed to an airflow with the ambient temperature T_A. This applies to continuous operation in the input voltage range $V_{i\,min}$ to $V_{i\,max}$; see table 2, *Input data*. The case temperature T_C ($T_{C\,Z}$ for option Z) measured at the measuring point of case temperature (see *Mechanical Data*) will approach the indicated value $T_{C\,max}$ after the warm-up phase.

However, the reached temperature T_C depends heavily on the conditions of operation, the distance and temperature of surrounding components, the orientation of the converter and the airflow, and the surfaces, thickness, and properties of the printed circuit board.

Caution: The case temperature T_C ($T_{C\,Z}$ for option Z), measured at the temperature measuring point (see *Mechanical Data*) may under no circumstances exceed the specified maximum value. The installer must ensure that under all operating conditions T_C ($T_{C\,Z}$) remain within the limits stated in the table *Temperature specifications*.

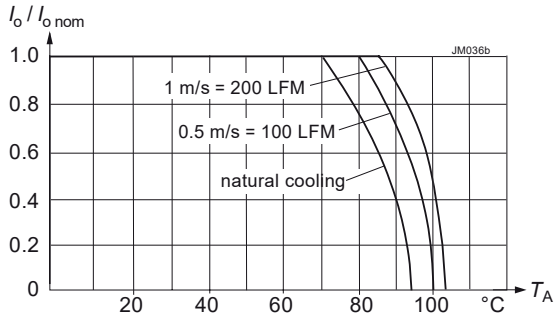

Fig. 6a
Maximum allowed output power versus ambient temperature for cased models 24IMX70-24-24-0 and 110IMY70-24-24-0 (with rev. AB or greater).

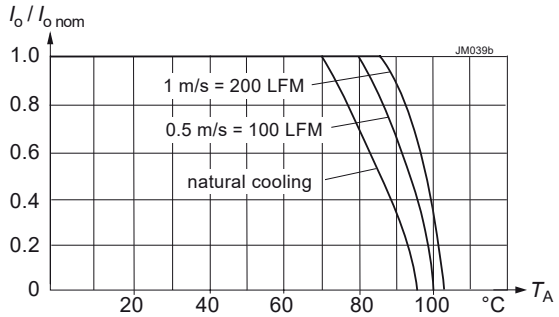

Fig. 6b
Maximum allowed output power versus ambient temperature for 24IMX70-24-24-0Z and 110IMY70-24-24-0Z (with rev. AB or greater).

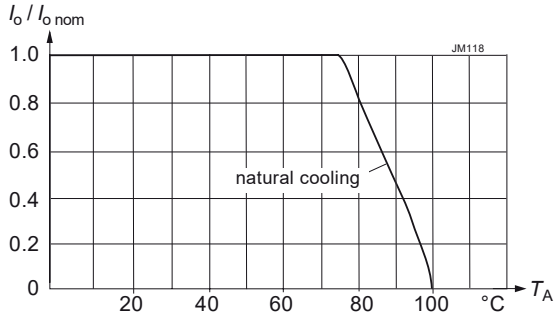

Fig. 6c
Max. allowed output power versus ambient temperature for converters 110IMY70-12 without opt. Z in vertical position.

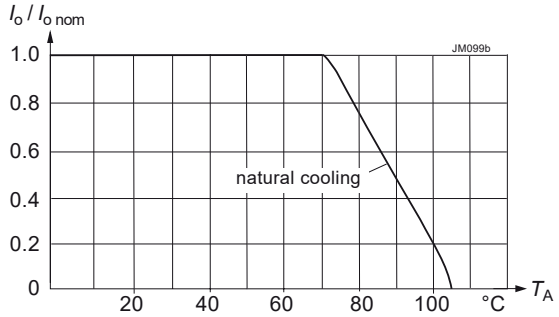

Fig. 6d
Max. allowed output power versus ambient temperature for converters 110IMY70-12-0Z in vertical position.

Overtemperature Protection

The converter is protected against possible overheating by means of an internal temperature monitoring circuit. It shuts down the converter above the internal temperature limit and attempts to automatically restart. This feature prevents excessive internal temperature building up, which could occur under heavy overload conditions.

Short Circuit Behavior

The current limiting circuit decreases the output voltage, when an overcurrent occurs. It protects against a short circuit and automatically recovers after removal of the overload condition. If one output of double-output models is overloaded, the current limiting circuit decreases the output voltage of output 1 and simultaneously of the tracking output 2.

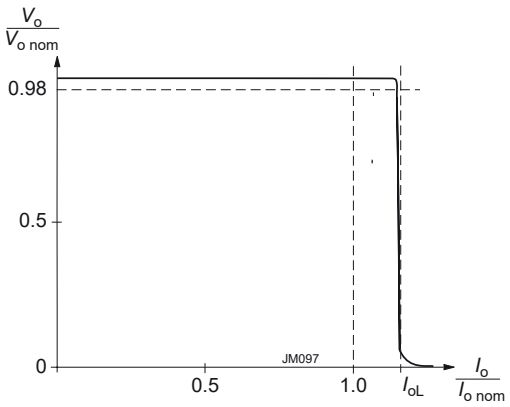

Fig. 7
Rectangular current limitation of single-output models

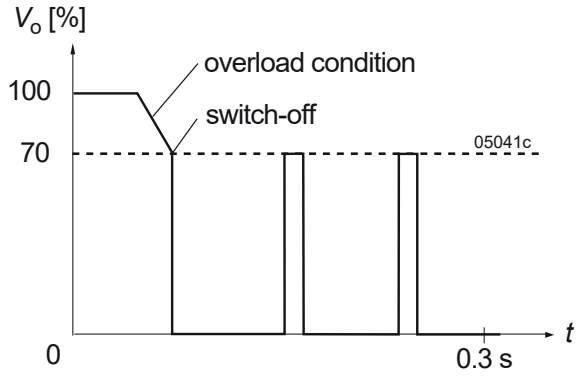

Fig. 8
Current limitation of double-output models with both outputs connected in parallel

Connection in Series and in Parallel

The outputs of all models may be connected in series without any precaution. If single-output converters are operated in parallel, we recommend ordering option T.

Both outputs of a double-output converter can be connected in parallel without precaution and will share their currents evenly.

Note: If output 2 of a double-output converter is not used, connect it in parallel with output 1 !

Single-output converters without option T or double-output converters with the same nominal output voltage should only be operated in parallel with some precautions. The output lines to the load should have the same length and section. To improve the current repartition, small resistors should be present in the output lines. If ORing diodes are used, double Schottky diodes should be chosen to keep both diodes at the same temperature level. If single diodes are chosen, they should be mounted on the same heat sink. If the total load exceeds 150% of the nominal load of one converter, start-up problems are possible.

Note: Instead of connecting two 24 V models in parallel, we recommend connecting of two 12 V models in series.

Cross Regulation of Double-Output Models

See fig. 9. General conditions:

– T_A = 25 °C, unless T_C is specified.

– Shutdown and R pin left open-circuit.

Efficiency

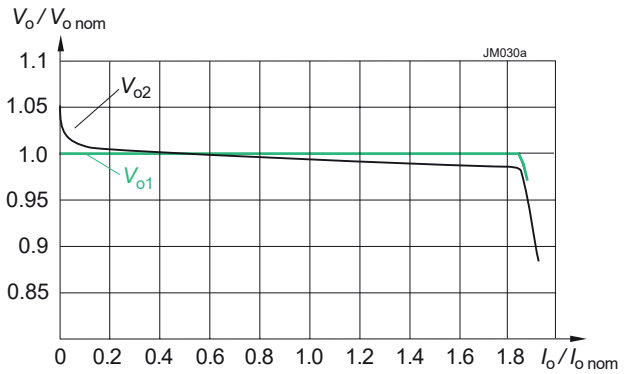

Fig. 9
Cross regulation of double-output models (typ.) V_{o2} versus I_{o2}, I_{o1} = 0.5 $I_{o1\ nom}$

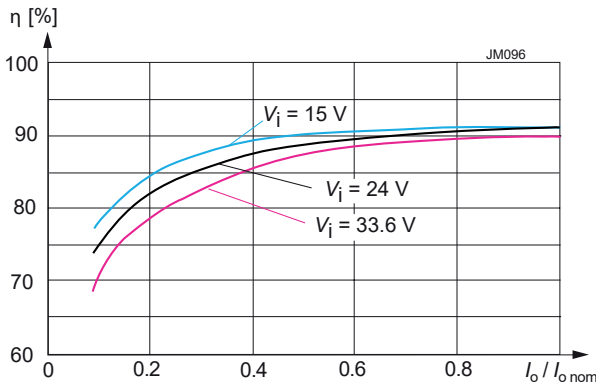

Fig. 10a
Efficiency versus input voltage and load. Typical values (24IMX70-24-24)

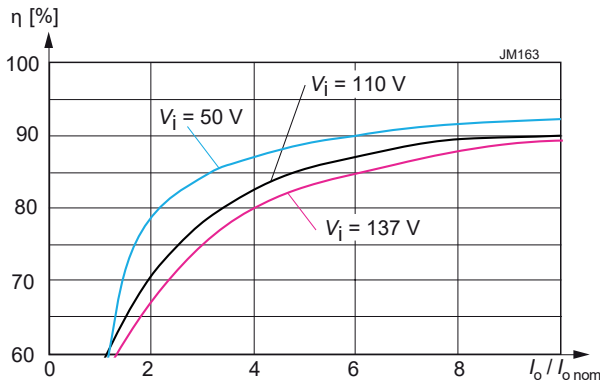

Fig. 10b
Efficiency versus input voltage and load. Typical values (110IMY70-05)

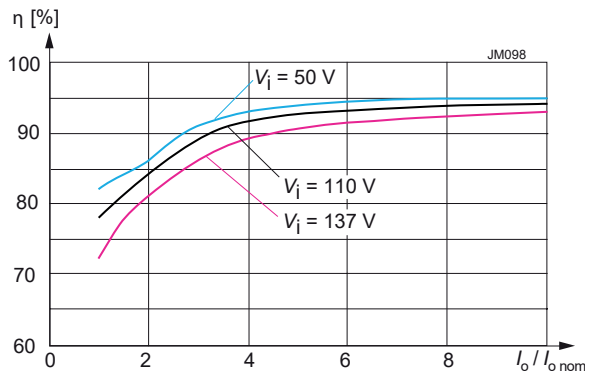

Fig. 10c
Efficiency versus input voltage and load. Typical values (110IMY70-12)

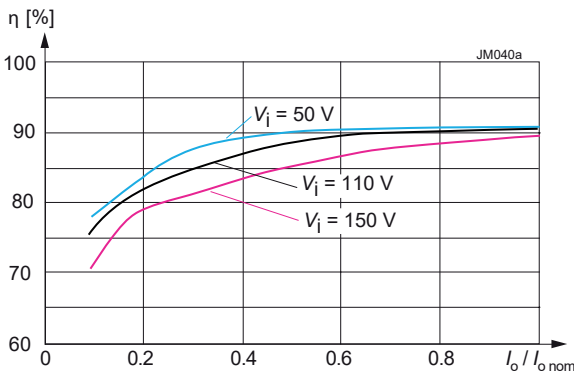

Fig. 10d
Efficiency versus input voltage and load. Typical values (110IMY70-24-24)

Auxiliary Functions

Adjustable Output Voltage

As a standard feature, the converters offer adjustable output voltages by using the control input R. Fig. 11 shows the schematic diagram of the circuitry. If the control input is left open-circuit, the output voltage is set to $V_{o\,nom}$.

Note: For output voltages $V_o > V_{o\,nom}$, the minimum input voltage $V_{i\,min}$ (see *Electr. Input Data*) increases proportionally to $V_o/V_{o\,nom}$.

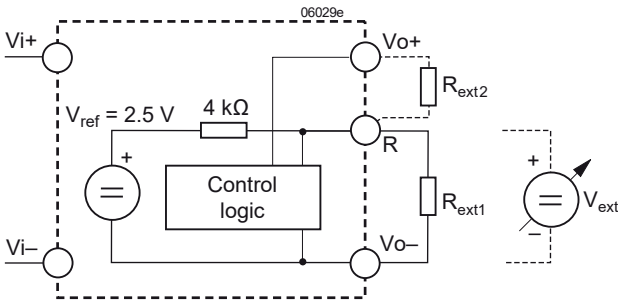

Fig. 11
Output voltage control by means of the R input

The R-input is referenced to the secondary side of the converter. Adjustment of V_o (or V_{o1}) is possible by means of either an external resistor or a voltage source.

a) Adjustment by means of an external resistor R_{ext}.

Depending upon the value of the required output voltage, the resistor shall be connected:

either: Between the R-pin and Vo– (or Vo1) to achieve an output voltage adjustment range of $V_o \approx 80$ to 100 % of $V_{o\,nom}$

Single-output models can be trimmed to $V_o \approx 0$ V.

$$R_{ext1} \approx 4\ \text{k}\Omega \cdot \frac{V_o}{V_{o\,nom} - V_o}$$

or: Between the R-pin and Vo+ (or Vo1+) to achieve an output voltage range of $V_o \approx 100$ to 105% of $V_{o\,nom}$.

$$R_{ext2} \approx 4\ \text{k}\Omega \cdot \frac{(V_o - 2.5\ \text{V})}{2.5\ \text{V} \cdot (V_o/V_{o\,nom} - 1)}$$

b) Adjustment by means of an external voltage V_{ext} between Vo– (or Vo1–) and the R-pin.

The control voltage range is 1.96 to 2.62 V and allows for adjustment in the range of $V_o \approx 80$ to 105% of $V_{o\,nom}$.

Single-output models can be trimmed to $V_o \approx 0$ V.

$$V_{ext} \approx \frac{V_o \cdot 2.5\ \text{V}}{V_{o\,nom}}$$

Note: Single-output models can be trimmed up to 110% of $V_{o\,nom}$.

Note: Applying a higher external control voltage as needed for the max. trim range may damage the converter.

Reference Output (Ref)

The converter provides a stable 5 V (±0.25 V) reference signal on pin 7 (Ref). The output is protected by a 1 kΩ resistor.

Note: It is recommended to connect a filter capacitor (0.1 µF) between Ref and Vi–, if Ref is used.

Current Sharing (T)

This feature is available for single-output models. Several parallel connected converters will share their current evenly by interconnecting the T pins (pin 11).

Note: This feature allows connecting the outputs together through ORing diodes to achieve redundancy. We recommend Schottky diodes mounted onto the same heat sink (for thermal balancing).

Sense Lines

The sense inputs of single-output models allow for compensating a voltage drop up to 1 V (0.6 V for models with $V_{o\,nom}$ = 5.1 V).

Synchronization (W)

Double-output models can be synchronized to an external TTL signal (220 ±10 kHz, duty cycle 10 – 15%). Due to the higher switching frequency, the efficiency will slightly drop.

Note: If this feature is not used, W (pin 6) can be connected to Vi– (pin 2) or left open-circuit.

Shutdown ($\overline{SD}$)

The outputs of the converters may be enabled or disabled by a logic signal (TTL, CMOS, etc.) applied between the shutdown pin 8 and Vi–. If the shutdown function is not required, pin 8 should be left open-circuit. Voltage on pin 8:

Converter operating:	2.0 to 20 V
Converter disabled:	–0.7 to +0.7 V

Progr. Input Voltage Lockout PUL

A special feature of these converters is the adjustable undervoltage lockout function, protecting the converter (and system) from high currents caused by operation at too low input voltage. This ensures easier start-up in distributed power systems.

The undervoltage lockout level can be programmed by an external resistor R_{PUL} (between PUL and Vi–) to increase the preset levels, as indicated in the table below (with hysteresis). The overvoltage lockout (OVL) cannot be varied.

Table 8: Turn-on and shutdown voltage (pin 1 left open)

Model	Turn-on level	Hysteresis	OVL	Unit
24IMX70	3.5 – 14.5	typ. 2.5	41 – 43	V
110IMY70	44.5 – 47.5	typ. 6	160 – 175	

Table 9: Typical values for R_{PUL} and the respective turn-on input voltage $V_{i\,LO}$.

24IMX70	R_{PUL} [kΩ]		110IMY70	R_{PUL} [kΩ]	
$V_{i\,LO}$ [V]	single-output	double-output	$V_{i\,LO}$ [V]	single-output	double-output
14	∞	∞	46	∞	∞
16	40.5	120	50	68	270
18	60	62	57	25.5	110
20	65	41	61	18	82

Electromagnetic Compatibility (EMC)

A suppressor diode together with an input filter form an effective protection against high input transient voltages which typically occur in many installations, but especially in battery-driven mobile applications.

Electromagnetic Immunity

Table 10: Electromagnetic immunity (type tests)

Phenomenon	Standard	Level	Coupling mode [1]	Value applied	Waveform	Source imped.	Test procedure	In oper.	Perf. crit. [2]
Electrostatic discharge (to case)	IEC/EN 61000-4-2	[3]	contact discharge (R pin open)	±6000 V_p	1/50 ns	330 Ω 150 pF	10 pos. & 10 neg. discharges	yes	B
		3	air discharge (R pin open)	±8000 V_p					
Electromagnetic field	IEC/EN 61000-4-3	x [4]	antenna	20 V/m	AM 80% / 1 kHz	N/A	80 – 1000 MHz	yes	A
		[5]	antenna	20 V/m	AM 80% / 1 kHz	N/A	800 – 1000 MHz	yes	A
				10 V/m			1400 – 2100 MHz		
				5 V/m			2100 – 2500 MHz		
Electrical fast transients / burst	IEC/EN 61000-4-4	3 [6]	direct coupling +i/c, –i/c, +i/–i	±2000 V_p	bursts of 5/50 ns; 5 kHz over 15 ms; burst period: 300 ms	50 Ω	60 s positive 60 s negative transients per coupling mode	yes	A
		4		±4000 V_p				yes	B
		3	capacit. coupl. o/c	±2000 V_p				yes	B
Surges	IEC/EN 61000-4-5	3 [7]	+i/c, –i/c	±2000 V_p	1.2 / 50 µs	12 Ω/ 9 µF	5 pos. & 5 neg. surges per coupling mode	yes	B
		2 [7]	+i/–i	±1000 V_p		2 Ω/ 18 µF			
Conducted disturbances	IEC/EN 61000-4-6	3 [8]	i, o, signal wires	10 VAC (140 dBµV)	AM 80% / 1 kHz	150 Ω	0.15 – 80 MHz	yes	A

1 i = input, o = output, c = case (not for option Z)
2 A = normal operation, no deviation from specification, B = temporary deviation from specs. possible.
3 Corresponds to EN 50121-3-2:2016 table 5.3 and EN 50121-4:2016 table 2.4.
4 Corresponds to EN 50121-3-2:2016 table 5.1 and exceeds EN 50121-4:2016 table 2.1.
5 Corresponds to EN 50121-3-2:2016 table 5.2 and EN 50121-4:2016 table 2.2.
6 Corresponds to EN 50121-3-2:2016 table 3.2 and EN 50121-4:2016 table 4.2.
7 Measured with an external input capacitor specified in table 5. Exceeds EN 50121-3-2:2016 table 3.3 and EN 50121-4:2016 table 4.3.
8 Corresponds to EN 50121-3-2:2016 table 3.1 and EN 50121-4:2016 table 4.1.

Electromagnetic Emissions

The EMC requirements must be observed at the end product system level. However, we test the converters to EMC standards. An effective integrated input filter significantly reduces the reflected input current and improves EMC features. Further improvements are possible by adding external filters.

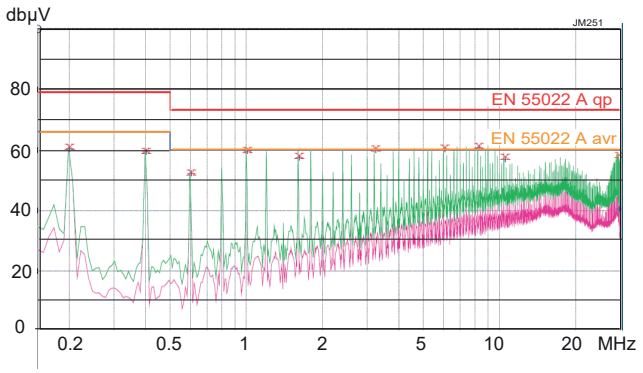

Fig. 12
Typical disturbance voltage at the input (green = peak, x = quasi-peak, pink = average) according to EN 55011, measured at $V_{i\,nom}$ and $I_{o\,nom}$. Output leads = 0.1 m, twisted (110IMY70-24-24).

Immunity to Environmental Conditions

Table 11: Mechanical and climatic stress

Test method		Standard	Test Conditions		Status
Cab	Damp heat steady state	IEC/EN 60068-2-78 MIL-STD-810D section 507.2	Temperature: Relative humidity: Duration:	40 ±2 °C 93 +2/-3 % 56 days	Converter not operating
Db	Damp heat test, cyclic	EN 50155:2007, clause 12.2.5 IEC/EN 60068-2-30	Temperature: Cycles (respiration effect): Duration:	55 °C and 25 °C 2 2 x 24 h	Converter not operating
Bd	Dry heat test steady state	EN 50155:2007, clause 12.2.4 IEC/EN 60068-2-2	Temperature: Duration:	70 °C 6 h	Converter operating
Ad	Cooling test steady state	EN 50155:2007, clause 12.2.3 IEC/EN 60068-2-1	Temperature, duration: Performance test:	-40 °C, 2 h +25 °C	Converter not operating
Ka	Salt mist test sodium chloride (NaCl) solution [2]	EN 50155:2007, clause 12.2.10 IEC/EN 60068-2-11 class ST2	Temperature: Duration:	35 ±2 °C 16 h	Converter not operating
Fc	Vibration (sinusoidal)	IEC/EN 60068-2-6 MIL-STD-810D section 514.3	Acceleration amplitude: Frequency (1 Oct/min): Test duration:	0.35 mm (10 – 60 Hz) 5 g_n = 49 m/s² (60 - 2000 Hz) 10 – 2000 Hz 7.5 h (2.5 h in each axis)	Converter operating
Fh	Random vibration broad band (digital control) & guidance	IEC/EN 60068-2-64	Acceleration spectral density: Frequency band: Acceleration magnitude: Test duration:	0.05 g_n^2/Hz 8 – 500 Hz 4.9 $g_{n\ rms}$ 1.5 h (5 h in each axis)	Converter operating
Ea	Shock (half-sinusoidal)	IEC/EN 60068-2-27 MIL-STD-810D section 516.3	Acceleration amplitude: Bump duration: Number of bumps:	50 g_n = 490 m/s² 11 ms 18 (3 in each direction)	Converter operating
---	Shock	EN 50155:2007, clause 12.2.11 EN 61373 sect. 10 class B, body mounted [1]	Acceleration amplitude: Bump duration: Number of bumps:	5.1 g_n 30 ms 18 (3 in each direction)	Converter operating
---	Simulated long life testing at increased random vibration levels	EN 50155:2007, clause 12.2.11 EN 61373 sect. 8 and 9 class B, body mounted [1]	Acceleration spectral density: Frequency band: Acceleration magnitude: Test duration:	0.02 g_n^2/Hz 5 – 150 Hz 0.8 $g_{n\ rms}$ 15 h (5 h in each axis)	Converter operating

[1] Body mounted = chassis of a railway coach
[2] Models with option Z have been covered by lacquer (AVR80 or Peters SL1301) in order to simulate the end-use situation.

Temperatures

Table 8: Temperature specifications, valid for an air pressure of 800 – 1200 hPa (800 – 1200 mbar)

Model			-0			Unit
Characteristics		Conditions	min	typ	max	
T_A	Ambient temperature	In operation [1]	- 40		100 [1]	° C
T_C	Case temperature (without opt. Z) [2]		- 40		105 [2]	
T_{CZ}	Component temperature with opt. Z [2]		- 40		115 [2]	
T_S	Storage temperature	Not operational	- 55		85	

[1] See *Thermal Considerations*
[2] Temperature measurement point; see *Mechanical Data*

Reliability

Table 13: Calculated MTBF at nominal load

Model		Ground benign	Ground fixed		Ground mobile	Device hours	Unit
		40 °C	40 °C	70 °C	50 °C		
24IMX70-24-24	(Bellcore Telc. SR-332)	1 022 000	510 000	162 500	118 500		h
110IMY70-05	(Bellcore Telc. SR-332)	720 000	360 000	98 000	98 000		
110IMY70-12	(Bellcore Telc. SR-332)	825 000	413 000	182 000	106 000		
110IMY70-24-24	(Bellcore Telc. SR-332)	1 000 000	632 000	163 000	117 400		

[1] with an air flow of 0.5 m/s

Mechanical Data

Dimensions are in mm. Tolerances ±0.3 mm (unless noted).

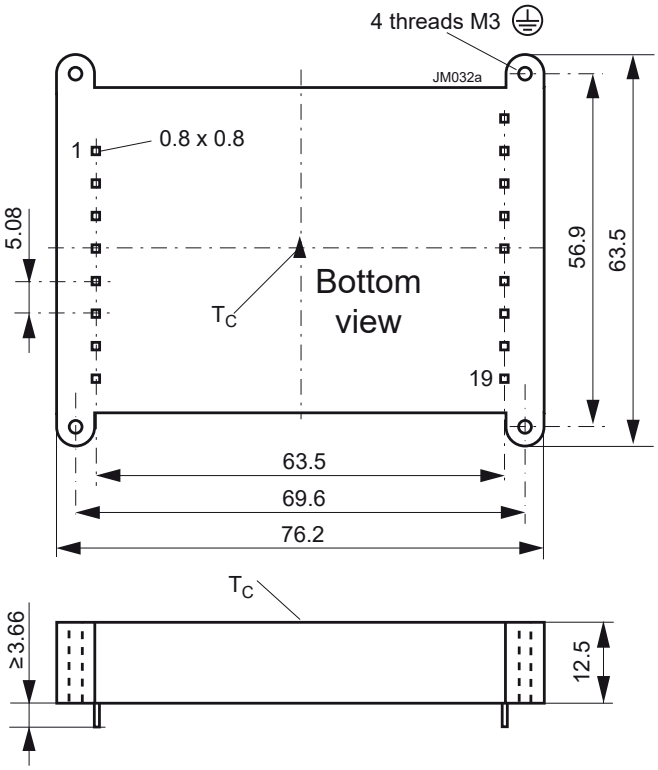

Fig. 13
Case IMX70/IMY70 (without opt. Z)
Material Zinc; weight: approx. 140 g

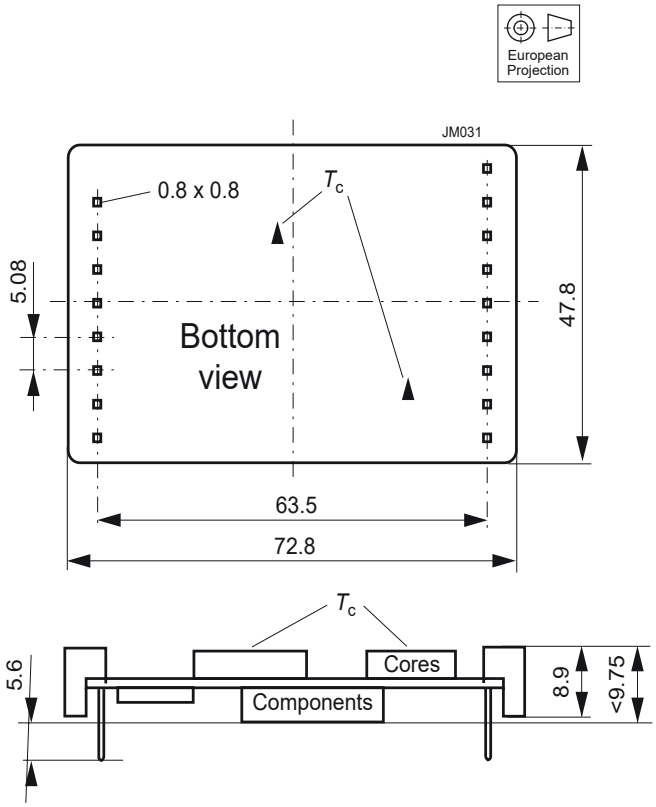

Fig. 14
IMX70/IMY70 open frame (option Z)
Weight: approx. 70 g

Safety and Installation Instruction

Pin Allocation

Table 12: Pin allocation

Pin no.	Single-output	Double-output
1	PUL	PUL
2	Vi–	Vi–
3	n.c. / Vi– [1]	n.c. / Vi– [1]
4	Vi+	Vi+
5	n.c. / Vi+ [1]	n.c. / Vi+ [1]
6	W (Sync.)	W (Sync.)
7	Ref	Ref
8	$\overline{SD}$ / i [2]	$\overline{SD}$ / i [2]
11	T	n.c.
12	n.c.	n.c.
13	S+	Vo2+
14	Vo–	Vo2–
15	Vo–	Vo1–
16	Vo+	Vo1+
17	Vo+	n.c.
18	S–	n.c.
19	R (adjust)	R (adjust)

[1] Only connected at 24IMX models, n.c. for 110IMY
[2] i if option i (inhibit) is fitted

Installation Instructions

Installation of the converters must strictly follow the national safety regulations in compliance with the enclosure, mounting, creepage distances and clearances, markings, and segregation requirements of the end-use application.

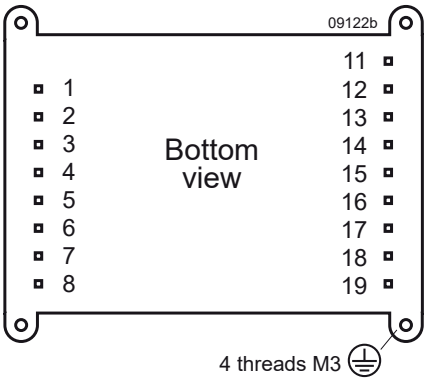

Fig. 15
Footprint. The holes in the PCB should have a diameter of 1.6 mm.

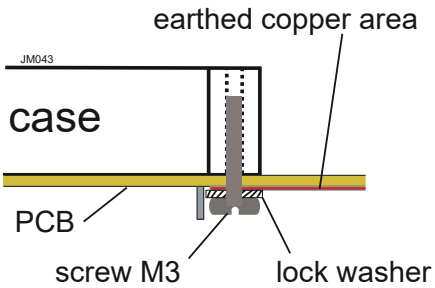

Fig. 16
Reliable connection of the metallic case to protective earth (110IMY70 models). Use at least 2 screws!

Connection to the system shall be made via a printed circuit board with hole diameters of 1.6 mm for the pins. Connect both input pins for 24IMX70 models.

The converters should be connected to a secondary circuit.

Ensure that a converter failure (e.g. by an internal short-circuit) does not result in a hazardous condition.

Standards and Approvals

The converters are safety agency approved to the standards IEC/EN 60950 and UL/CSA 60950-1 2nd Edition.

The converters have been evaluated for:

- Building-in
- Basic insulation input to output for 24IMX70 models, based on the maximum input voltage;
- Reinforced insulation input to output for 110IMY70 models, basic insulation to the case, based on the input voltage of 150 V. The case can be reliably connected to PE (protective earth) – except option Z; see fig. 15 and 16.
- Pollution degree 2
- Connecting the input to a secondary circuit, which is subject to a maximum transient rating of 1500 V.

The converters are subject to manufacturing surveillance in accordance with the above mentioned standards.

CB scheme is available.

Input Fuse

To prevent excessive current flowing through the input supply lines in case of a short-circuit in the converter, an external fuse should be installed in the non-earthed input line; see table 3.

Railway Applications

To comply with Railway standards, all components are coated with a protective lacquer (except option Z).

Protection Degree and Cleaning Liquids

The protection degree is IP 40 (except option Z).

In order to avoid possible damage, any penetration of cleaning fluids should be prevented, since the converters are not hermetically sealed.

However, open-frame models (option Z) leave the factory unlacquered. They can be lacquered by the customer, for instance together with the mother board. Cleaning liquids are not permitted – except washing at room temperature with isopropyl alcohol and de-ionized/distilled water (1 : 1).

The mother board can also be cleaned, before fitting the open-frame converter.

Note: Other cleaning liquids can damage the adhesive joints of the ferrite cores.

Isolation

The electric strength test is performed in the factory as a routine test in accordance with EN 50514, IEC/EN 60950-1, and UL/CSA 60950-1. The Company will not honor any warranty claims resulting from incorrectly executed electric strength field tests.

Table 15: Electric strength test voltages

Characteristics	Input to (Outputs + Case) 24IMX70 [1]	Input to (Outputs + Case) 110IMY70 [1]	Outputs to Case all models [1]	Between Outputs all models	Unit
Factory test ≥1 s	1.5 [2]	3	0.5	0.15 [3]	kVAC
Equivalent DC voltage	2.1	4.2	0.7	0.21 [3]	kVDC
Insulation resistance at 500 VDC	>100	>100	---	---	MΩ

[1] For open-frame models (option Z), only the insulation input to outputs is tested.
[2] 1.5 kVAC according to IEC 60950, sect. 6.2, Telecom equipment; type test with 1.5 kVAC / 60 s (IEE 802.3).
[3] The test voltage between outputs is not applied as routine test.

Options

Option i: Inhibit (Negative Shutdown Logic)

The output of the converter may be enabled or disabled by means of a logic signal (TTL, CMOS, etc.) applied to the inhibit pin 8.

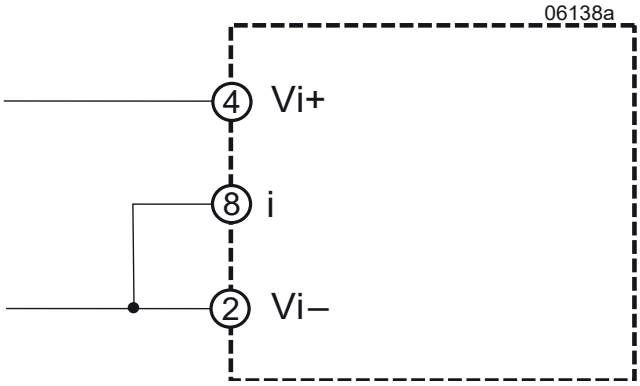

Fig. 17
If the inhibit function is not used, connect the inhibit pin i with Vi–.

No output voltage overshoot will occur, when the converter is turned on. If the inhibit function is not required the inhibit pin 8 should be connected to Vi– to enable the output (active low logic, fail safe). Voltage on pin 8:

Converter operating:	–10 V to +0.8 V
Converter disabled:	2.4 V to 20 V

Option Z

If the converters are mounted onto a mother board, in many cases, a converter case is not required. Only converters with option Z are not varnished, and this allows dipping of the populated board including the converter into a protection lacquer.

Note: The converters shall not be exposed to cleaning processes, as this will damage the glue of the ferrite cores.

NUCLEAR AND MEDICAL APPLICATIONS - These products are not designed or intended for use as critical components in life support systems, equipment used in hazardous environments, or nuclear control systems.

TECHNICAL REVISIONS - The appearance of products, including safety agency certifications pictured on labels, may change depending on the date manufactured. Specifications are subject to change without notice.