AzureWave Technologies, Inc.

AW-AM281SM

IEEE 802.11 1X1 a/b/g/n Wireless LAN + Bluetooth 5.0 Combo LGA Module

Datasheet

Rev. A

(For Standard)

The information contained herein is the exclusive property of AzureWave and shall not be distributed, reproduced, or disclosed in whole or in part without prior written permission of AzureWave.

Features

WLAN

- IEEE 802.11n compliant, 1x1 spatial stream with data rates up to MCS 7 (150 Mbps).
- PHY data rates up to 150 Mbps.
- Backward compatibility with legacy 802.11n/a/g/b technology.
- 20MHz bandwidth/ channel, 40MHz bandwidth/ channel, upper/ lower 20MHz packets in 40MHz channel, 20MHz duplicate legacy packets in 40MHz channel mode operation.
- Dynamic frequency selection (radar detection).
- 20/40 MHz coexistence.
- Multiple power saving modes for low power consumption.

Bluetooth

- Baseband and radio BDR and EDR packet types – 1Mbps (GFSK), 2Mbps (π/4-DQPSK), and 3Mbps (8DPSK).
- Fully qualified Bluetooth BT4.2 (includes LE) and support Bluetooth 5.
- Enhanced Data Rate (EDR) compliant for both 2Mbps and 3Mbps supported.
- PCM/Inter-IC Sound(I2S) for Bluetooth.
- Standard Bluetooth power saving mechanisms.
- WLAN/Bluetooth Coexistence (BCA) protocol support.

The information contained herein is the exclusive property of AzureWave and shall not be distributed, reproduced, or disclosed in whole or in part without prior written permission of AzureWave.

Revision History

Document NO: R2-2281SM-DST-01

Version	Revision Date	DCN NO.	Description	Initials	Approved
Version A	**2019/10/22**	**DCN016159**	**Initial Version**	**Grace Liu**	**N.C Chen**

The information contained herein is the exclusive property of AzureWave and shall not be distributed, reproduced, or disclosed in whole or in part without prior written permission of AzureWave.

Table of Contents

Features 2
Revision History 3
Table of Contents 4
1. Introduction 5
1.1 Product Overview 5
1.2 Block Diagram 6
1.3 Specifications Table 7
1.3.1 General 7
1.3.2 WLAN 7
1.3.3 Bluetooth 9
1.3.4 Operating Conditions 9
2. Pin Definition 10
2.1 Pin Map 10
2.2 Pin Table 11
3. Electrical Characteristics 13
3.1 Absolute Maximum Ratings 13
3.2 Recommended Operating Conditions 13
3.3 Digital IO Pin DC Characteristics 13
3.3.1 1.8V Operation (VDDIO) 13
3.3.2 3.3V Operation (VDDIO) 13
3.4 Host Interface 14
3.4.1 SDIO Interface 14
3.4.2 SDIO Protocol Timing 15
3.4.3 PCM Interface 19
3.5 Timing Sequence 21
3.6 Power Consumption* 22
3.6.1 WLAN 22
3.6.2 Bluetooth 22
3.7 Sleep Clock 23
4. Mechanical Information 24
4.1 Mechanical Drawing 24
5. Packaging Information 25

The information contained herein is the exclusive property of AzureWave and shall not be distributed, reproduced, or disclosed in whole or in part without prior written permission of AzureWave.

1. Introduction

1.1 Product Overview

AzureWave Technologies, Inc. introduces the IEEE 802.11a/b/g/n WLAN, BT, combo module – **AW-AM281SM.** With four advanced radio technologies integrated into a module, AW-AM281SM provides the best and most convenient SMT process. The module is targeted to mobile devices including**,** Tablet PC, Portable Media Players (PMPs), Portable Navigation Devices (PNDs), Personal Digital Assistants (PDAs), Tracking Devices, Gaming Devices which need convenient SMT process, low power consumption.

By using AW-AM281SM, the customers can easily integrate the Wi-Fi, BT, by a combo module with the benefits of **high design flexibility, high success rate on SMT process, short development cycle, and quick time-to-market.**

Compliance with the IEEE 802.11a/b/g/n standard, the AW-AM281SM uses **DSSS**, **OFDM**, **DBPSK**, **DQPSK**, **CCK** and **QAM** baseband modulation technologies. A high level of integration and full implementation of the power management functions specified in the IEEE 802.11 standard minimize the system power requirements by using AW-AM281SM.

The AW-AM281SM supports standard interface **SDIO (4-bit and 1-bit)** for WLAN/BT. AW-AM281SM is suitable for multiple mobile processors for different applications. With the combo functions and the good performance, the AW-AM281SM is the best solution for the consumer electronics and the tablet PC.

The information contained herein is the exclusive property of AzureWave and shall not be distributed, reproduced, or disclosed in whole or in part without prior written permission of AzureWave.

1.2 Block Diagram

A simplified block diagram of the AW-AM281SM module is depicted in the figure below.

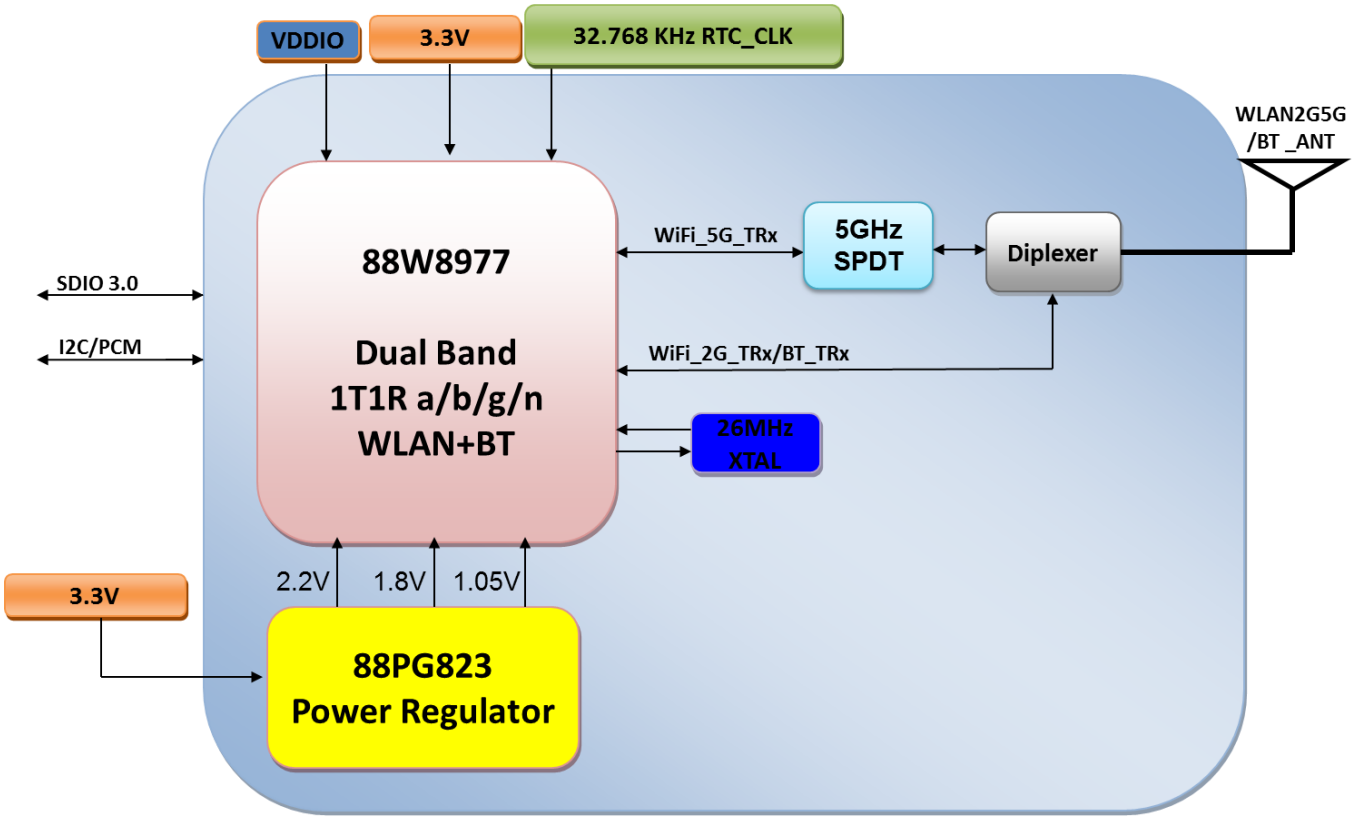

AW-AM281SM BLOCK DIAGRAM

The information contained herein is the exclusive property of AzureWave and shall not be distributed, reproduced, or disclosed in whole or in part without prior written permission of AzureWave.

1.3 Specifications Table

1.3.1 General

Features	Description
Product Description	IEEE 802.11 a/b/g/n Wi-Fi with Bluetooth 5.0 Combo Module
Major Chipset	Marvell 88W8977
Host Interface	Wi-Fi: SDIO , BT: SDIO
Dimension	12 mm X 12 mm x 1.7 mm(Max)
Package	LGA
Weight	0.5g

1.3.2 WLAN

Features	Description
WLAN Standard	IEEE802.11 a/b/g/n
Frequency Rage	2.4 GHz ISM Bands 2.412-2.472 GHz 5.15-5.25 GHz (FCC UNII-low band) for US/Canada and Europe 5.25-5.35 GHz (FCC UNII-middle band) for US/Canada and Europe 5.47-5.725 GHz for Europe 5.725-5.825 GHz (FCC UNII-high band) for US/Canada
Modulation	DSSS, OFDM, DBPSK, DQPSK, CCK, 16-QAM, 64-QAM
Number of Channels	2.4GHz: ■ USA, NORTH AMERICA, Canada and Taiwan - 1 ~ 11 ■ China, Australia, Most European Countries - 1 ~ 13 ■ Japan, 1 ~ 13 5GHz: ■ USA, Canada, Most European Countries - 36,40,44,48,52,56,60,64,100,104,108,112,116,120,124,128,132,136,140,149,153,157,161,165 ■ Japan - 36,40,44,48,52,56,60,64,100,104,108,112,116,120,124,128,132,136,140 ■ China - 36,40,44,48,52,56,60,64, 149,153,157,161,165

The information contained herein is the exclusive property of AzureWave and shall not be distributed, reproduced, or disclosed in whole or in part without prior written permission of AzureWave.

Output Power (Board Level Limit)*

2.4G

	Min	Typ	Max	Unit
11b (11Mbps) @EVM<35%	14	16	18	dBm
11g (54Mbps) @EVM≦-27 dB	12	14	16	dBm
11n (HT20 MCS7) @EVM≦-28 dB	11	13	15	dBm
11n (HT40 MCS7) @EVM≦-28 dB	9	11	13	dBm

5G

	Min	Typ	Max	Unit
11a (54Mbps) @EVM≦-27 dB	11	13	15	dBm
11n (HT20 MCS7) @EVM≦-28 dB	10	12	14	dBm
11n (HT40 MCS7) @EVM≦-28 dB	8	10	12	dBm

Receiver Sensitivity

2.4G

	Min	Typ	Max	Unit
11b (11Mbps)		-87	-84	dBm
11g (54Mbps)		-73	-69	dBm
11n (HT20 MCS7)		-69	-66	dBm
11n (HT40 MCS7)		-67	-64	dBm

5G

	Min	Typ	Max	Unit
11a (54Mbps)		-71	-68	dBm
11n (HT20 MCS7)		-67	-64	dBm
11n (HT40 MCS7)		-63	-60	dBm

Data Rate

WLAN:
802.11b : 1, 2, 5.5, 11Mbps
802.11a/g : 6, 9, 12, 18, 24, 36, 48, 54Mbps
802.11n : Maximum data rates up to 72 Mbps (20 MHz channel), 150 Mbps (40 MHz channel)

Security

- WAPI
- WEP 64-bit and 128-bit encryption with H/W TKIP processing
- WPA/WPA2 (Wi-Fi Protected Access)
- AES-CCMP hardware implementation as part of 802.11i security standard

* If you have any certification questions about output power please contact FAE directly.

The information contained herein is the exclusive property of AzureWave and shall not be distributed, reproduced, or disclosed in whole or in part without prior written permission of AzureWave.

1.3.3 Bluetooth

<table>
<tr><th>Features</th><th>Description</th></tr>
<tr><td>Bluetooth Standard</td><td>BT4.2+Enhanced Data Rate (EDR)
Bluetooth 5 support</td></tr>
<tr><td>Frequency Rage</td><td>2402MHz~2483MHz</td></tr>
<tr><td>Modulation</td><td>Header GFSK
Payload 2M: π/4-DQPSK
Payload 3M: 8DPSK</td></tr>
<tr><td>Output Power</td><td>
<table>
<tr><th></th><th>Min</th><th>Typ</th><th>Max</th><th>Unit</th></tr>
<tr><td>BDR</td><td>0</td><td>2</td><td>4</td><td>dBm</td></tr>
<tr><td>EDR</td><td>-4</td><td>-1</td><td>1</td><td>dBm</td></tr>
<tr><td>Low Energy</td><td>0</td><td>2</td><td>4</td><td>dBm</td></tr>
</table>
</td></tr>
<tr><td>Receiver Sensitivity</td><td>BT Sensitivity (BER<0.1%)
<table>
<tr><th></th><th>Min</th><th>Typ</th><th>Max</th><th>Unit</th></tr>
<tr><td>BDR(DH1)</td><td></td><td>-90</td><td>-80</td><td>dBm</td></tr>
<tr><td>EDR(2DH5)</td><td></td><td>-92</td><td>-80</td><td>dBm</td></tr>
<tr><td>EDR(3DH5)</td><td></td><td>-88</td><td>-70</td><td>dBm</td></tr>
<tr><td>Low Energy</td><td></td><td>-92</td><td>-85</td><td>dBm</td></tr>
</table>
</td></tr>
</table>

1.3.4 Operating Conditions

Features	Description
Operating Conditions	
Voltage	3.3V
Operating Temperature	-20 to +85 °C
Operating Humidity	Less than 85%R.H.
Storage Temperature	-40 to +85 °C
Storage Humidity	Less than 60%R.H.
ESD Protection	
Human Body Model	>2KV per MIL-STD-883H Method 3015.8
Changed Device Model	>500V per JEDEC EIA/JESD22-C101E

The information contained herein is the exclusive property of AzureWave and shall not be distributed, reproduced, or disclosed in whole or in part without prior written permission of AzureWave.

2. Pin Definition

2.1 Pin Map

AW-AM281SM pin out drawing (top view).

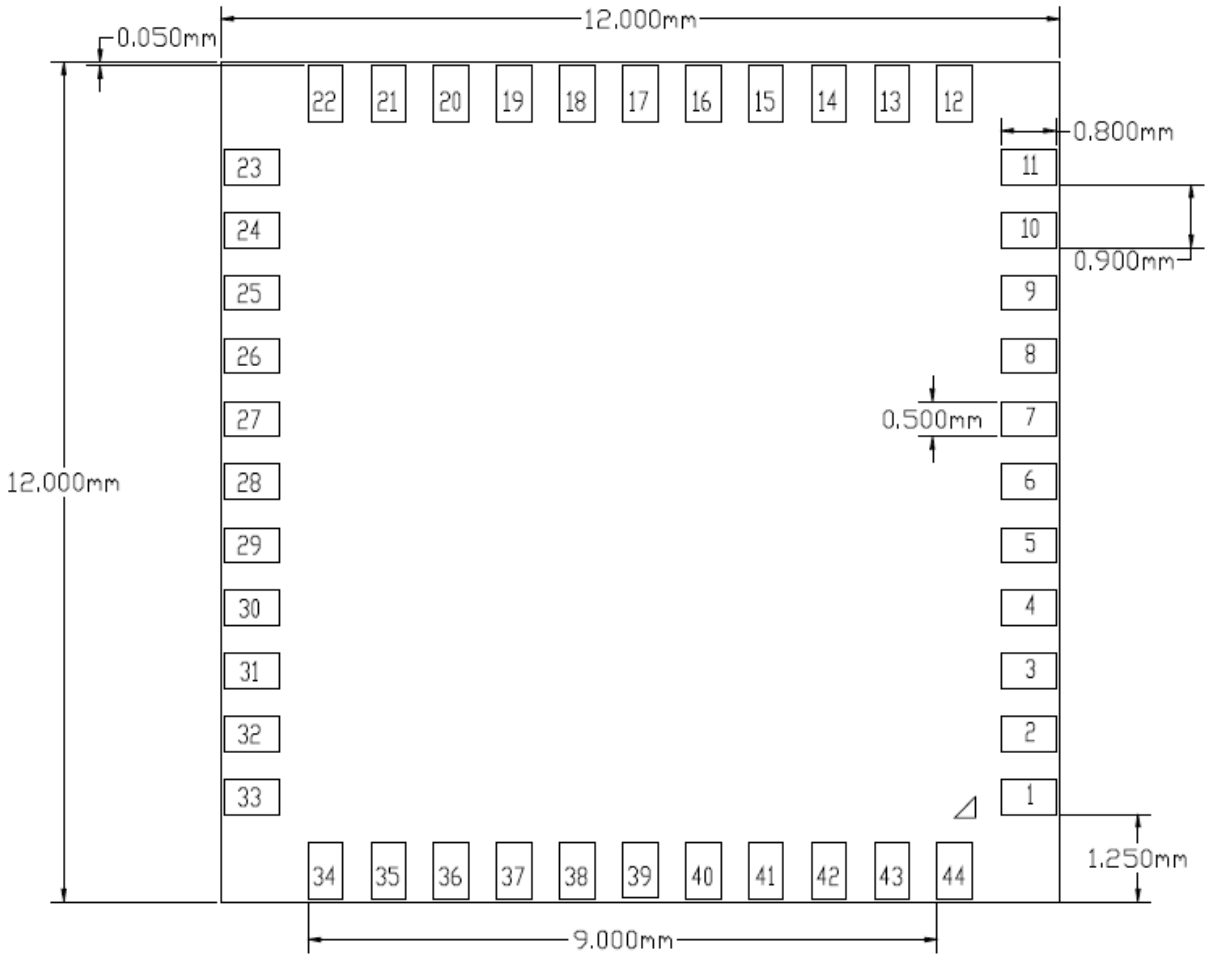

The information contained herein is the exclusive property of AzureWave and shall not be distributed, reproduced, or disclosed in whole or in part without prior written permission of AzureWave.

2.2 Pin Table

Pin No	Definition	Basic Description	Voltage	Type
1	GND1	Ground	---	---
2	WL_BT_ANT	Option for RF I/O pin out	1.8V	I/O
3	GND3	Ground	---	---
4	NC4	Floating Pin, No connect to anything.	---	Floating
5	NC5	Floating Pin, No connect to anything.	---	Floating
6	BT_HOST_WAKE_DEV	BT Device Wake	VDDIO	I
7	BT_DEV_WAKE_Host	BT Host Wake	VDDIO	O
8	NC8	Floating Pin, No connect to anything.	---	Floating
9	VDD33	3.3V power voltage source input	3.3V	P
10	NC10	Floating Pin, No connect to anything.	---	Floating
11	NC11	Floating Pin, No connect to anything.	---	Floating
12	WL_DIS#	WiFi reset pin	VDDIO	I
13	WL_DEV_WAKE_HOST	WL Host Wake	VDDIO	I/O
14	SDIO_DATA_2	SDIO Data line Bit[2]	VDDIO	I/O
15	SDIO_DATA_3	SDIO Data line Bit[3]	VDDIO	I/O
16	SDIO_DATA_CMD	SDIO Command	VDDIO	I/O
17	SDIO_DATA_CLK	SDIO Clock input	VDDIO	I
18	SDIO_DATA_0	SDIO Data line Bit[0]	VDDIO	I/O
19	SDIO_DATA_1	SDIO Data line Bit[1]	VDDIO	I/O
20	GND20	Ground	---	---
21	NC21	Floating Pin, No connect to anything.	---	Floating
22	VDDIO	1.8V/3.3V Digital I/O Power Supply	1.8V/3.3V	P
23	NC23	Floating Pin, No connect to anything.	---	Floating
32	SLP_CLK	External Low Power Clock input (32.768KHz)	VDDIO	I
33	PCM_OUT	PCM Data output	VDDIO	I/O
34	PCM_CLK	PCM Clock	VDDIO	I/O
35	PCM_IN	PCM data input	VDDIO	I/O
36	PCM_SYNC	PCM sync signal	VDDIO	I/O
37	NC29	Floating Pin, No connect to anything.	---	Floating
38	NC30	Floating Pin, No connect to anything.	---	Floating
39	GND31	Ground	---	---
40	NC32	Floating Pin, No connect to anything.	---	Floating
41	GND33	Ground	---	---
42	BT_DIS#	BT reset pin	VDDIO	I
43	NC35	Floating Pin, No connect to anything.	---	Floating
44	GND36	Ground	---	---
45	NC37	Floating Pin, No connect to anything.	---	Floating

The information contained herein is the exclusive property of AzureWave and shall not be distributed, reproduced, or disclosed in whole or in part without prior written permission of AzureWave.

46	NC38	Floating Pin, No connect to anything.	---	Floating
47	GPIO8	GPIO Mode : GPIO[8]. Bluetooth External Coexistence Mode : BT_FREQ.	VDDIO	I/O
48	GPIO9	GPIO Mode : GPIO[9]. Bluetooth External Coexistence Mode : BT_STATE.	VDDIO	I/O
49	NC41	Floating Pin, No connect to anything.	---	Floating
50	NC42	Floating Pin, No connect to anything.	---	Floating
51	NC43	Floating Pin, No connect to anything.	---	Floating
52	NC44	Floating Pin, No connect to anything.	---	Floating

The information contained herein is the exclusive property of AzureWave and shall not be distributed, reproduced, or disclosed in whole or in part without prior written permission of AzureWave.

3. Electrical Characteristics

3.1 Absolute Maximum Ratings

Symbol	Parameter	Minimum	Typical	Maximum	Unit
3.3V	DC supply for the 3.3V input	-	3.3	4.0	V
VDDIO	Host I/O power supply	-	3.3	4.0	V
			1.8	2.2	

3.2 Recommended Operating Conditions

Symbol	Parameter	Minimum	Typical	Maximum	Unit
3.3V	DC supply for the 3.3V input	2.97	3.3	3.63	V
VDDIO	1.8V/3.3V digital I/O power supply	2.97	3.3	3.63	V
		1.62	1.8	1.98	

3.3 Digital IO Pin DC Characteristics

3.3.1 1.8V Operation (VDDIO)

Symbol	Parameter	Minimum	Typical	Maximum	Unit
V_{IH}	Input high voltage	0.7*V18	-	V18+0.4	V
V_{IL}	Input low voltage	-0.4	-	0.3*V18	
V_{OH}	Output high voltage	V18-0.4	-	-	
V_{OL}	Output low voltage	-	-	0.4	

3.3.2 3.3V Operation (VDDIO)

Symbol	Parameter	Minimum	Typical	Maximum	Unit
V_{IH}	Input high voltage	0.7*V33	-	V33+0.4	V
V_{IL}	Input low voltage	-0.4	-	0.3*V33	V
V_{OH}	Output High Voltage	V33-0.4	-	-	V
V_{OL}	Output Low Voltage	-	-	0.4	V

The information contained herein is the exclusive property of AzureWave and shall not be distributed, reproduced, or disclosed in whole or in part without prior written permission of AzureWave.

3.4 Host Interface

3.4.1 SDIO Interface

The AW-AM281SM supports a SDIO device interface that conforms to the industry SDIO Full-Speed card specification and allows a host controller using the SDIO bus protocol to access the Wireless SoC device.

The AW-AM281SM acts as the device on the SDIO bus. The host unit can access registers of the SDIO interface directly and can access shared memory in the frvice through the use of BARs and a DMA engine.

- Support SDIO 3.0 Standard.
- On-chip memory used for CIS.
- Supports 4-bit SDIO and 1-bit SDIO transfer modes.
- Special interrupt register for information exchange.
- Allows card to interrupt host.

SDIO Interface Signals

AW-AM281MA SDIO Pin Name	Type	Description
SDIO_DATA_CLK	I	SDIO 4-bit mode: Clock SDIO 1-bit mode: Clock
SDIO_DATA_CMD	I/O	SDIO 4-bit mode: Command line SDIO 1-bit mode: Command line
SDIO_DATA_3	I/O	SDIO 4-bit mode: Data line Bit[3] SDIO 1-bit mode: Not used
SDIO_DATA_2	I/O	SDIO 4-bit mode: Data line Bit[2] or Read Wait (optional) SDIO 1-bit mode: Read Wait (optional)
SDIO_DATA_1	I/O	SDIO 4-bit mode: Data line Bit[1] SDIO 1-bit mode: Interrupt
SDIO_DATA_0	I/O	SDIO 4-bit mode: Data line Bit[0] SDIO 1-bit mode: Data line

The information contained herein is the exclusive property of AzureWave and shall not be distributed, reproduced, or disclosed in whole or in part without prior written permission of AzureWave.

3.4.2 SDIO Protocol Timing

3.4.2.1 Default Speed, High-Speed Modes (3.3V)

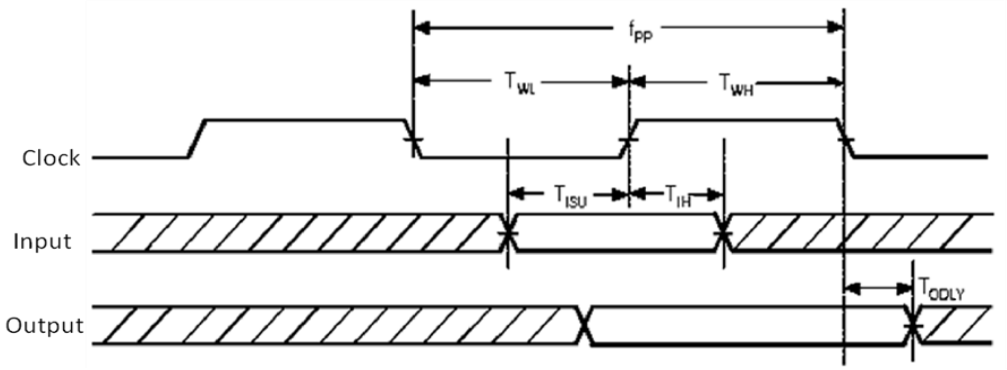

SDIO protocol timing Diagram - Default mode. (3.3V)

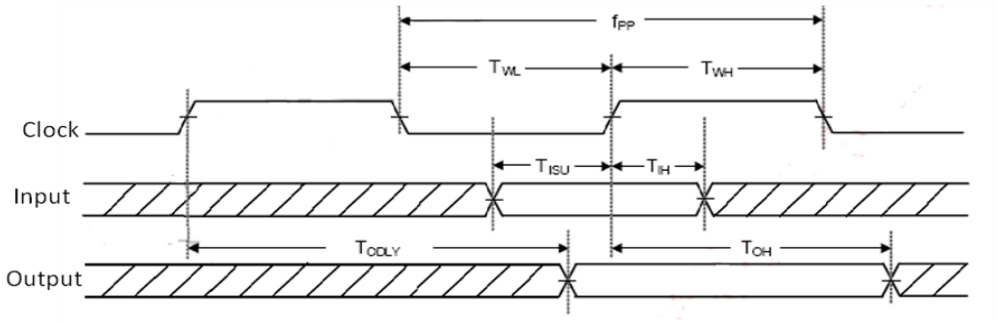

SDIO protocol timing Diagram - High Speed mode. (3.3V)

Symbol	Parameter	Condition	Min	Typ	Max	Units
fpp	CLK Frequency	Normal	0	--	25	MHz
		High Speed	0	--	50	MHz
T_{WH}	CLK High Time	Normal	10	--	--	ns
		High Speed	7	--	--	ns
T_{WL}	CLK Low Time	Normal	10	--	--	ns
		High Speed	7	--	--	ns
T_{ISU}	Input Setup Time	Normal	5	--	--	ns
		High Speed	6	--	--	ns
T_{IH}	Input Hold Time	Normal	5	--	--	ns
		High Speed	2	--	--	ns
T_{ODLY}	Output Delay Time	Normal	--	--	14	ns
	CL ≦ 40pF (1 card)	High Speed	--	--	14	ns
T_{OH}	Output Hold Time	High Speed	2.5	--	--	ns

SDIO Timing Data – Default Speed / High-Speed modes. (3.3V)

The information contained herein is the exclusive property of AzureWave and shall not be distributed, reproduced, or disclosed in whole or in part without prior written permission of AzureWave.

3.4.2.2 SDR12, SDR25, SDR50 Modes (up to 100MHz) (1.8V)

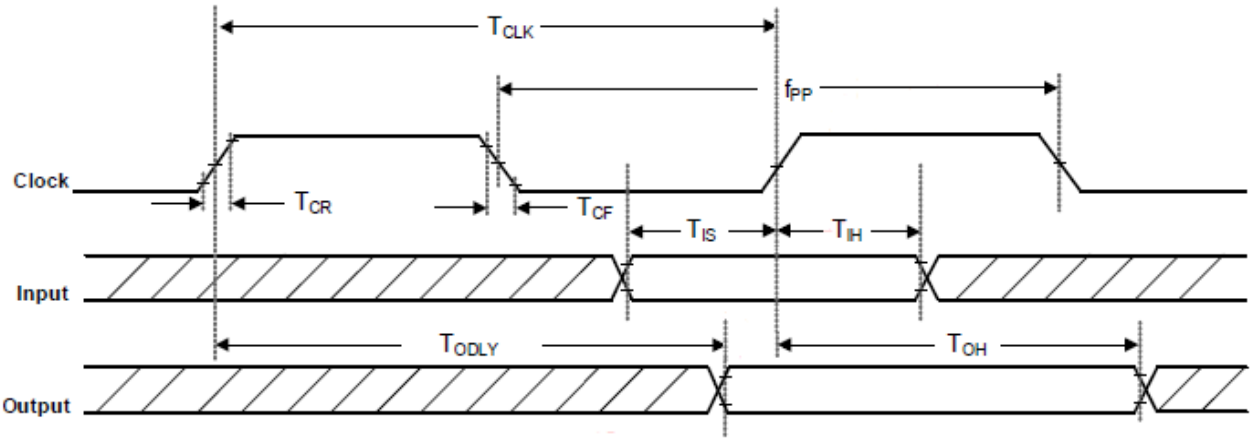

SDIO Protocol Timing Diagram - SDR12, SDR25, SDR50 Modes (up to 100 MHz)(1.8V)

Symbol	Parameter	Condition	Min	Typ	Max	Units
F_{pp}	CLK Frequency	SDR12/25/50	25	-	100	MHz
T_{CLK}	Clock Time	SDR12/25/50	10	-	40	ns
T_{IS}	Input Setup Time	SDR12/25/50	3	-	-	ns
T_{IH}	Input Hold Time	SDR12/25/50	0.8	-	-	ns
T_{CR} ,T_{CF}	Rise time, fail time TCR ,TCF <2ns(max) at 100MHz CCARD =10pF	SDR12/25/50	-	-	0.2*T_{CLK}	ns
T_{ODLY}	Output Delay Time CL ≦ 30pF	SDR12/25/50	-	-	7.5	ns
T_{OH}	Output Hold Time CL =15pF	SDR12/25/50	1.5	-	-	ns

SDIO Timing Data - SDR12/25/50 modes. (1.8V)

The information contained herein is the exclusive property of AzureWave and shall not be distributed, reproduced, or disclosed in whole or in part without prior written permission of AzureWave.

3.4.2.3 DDR50 Mode (50MHz) (1.8V)

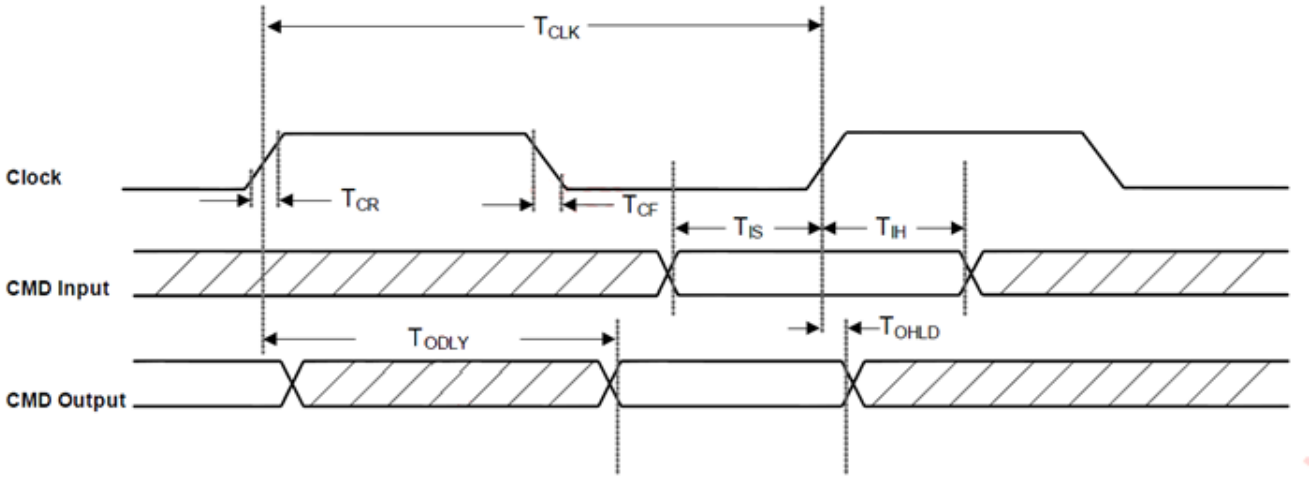

SDIO CMD Timing Diagram - DDR50 Mode (50 MHz)

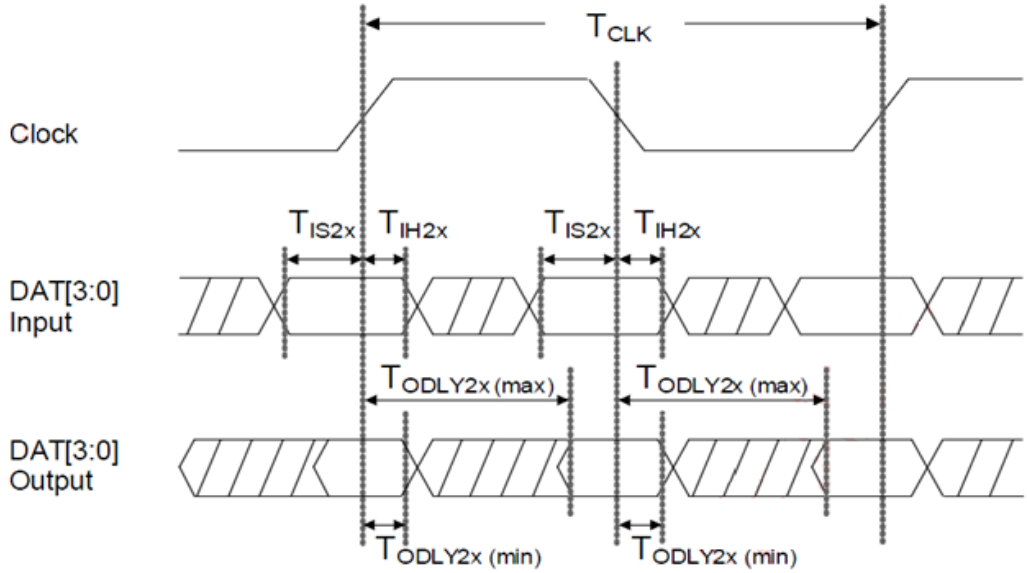

SDIO DAT[3:0] Timing Diagram - DDR50 Mode[1] (50 MHz)

[1] In DDR50 mode, DAT[3:0] lines are sampled on both edges of the clock (not applicable for CMD line).

The information contained herein is the exclusive property of AzureWave and shall not be distributed, reproduced, or disclosed in whole or in part without prior written permission of AzureWave.

Symbol	Parameter	Condition	Min	Typ	Max	Units
Clock						
T_{CLK}	Clock time	DDR50	20	-	-	ns
T_{CR}, T_{CF}	Rise time, fall time	DDR50	-	-	0.2*T_{CLK}	Ns
Clock Duty		DDR50	45	-	55	%
CMD Input						
T_{IS}	Input setup time	DDR50	6	-	-	ns
T_{IH}	Input hold time	DDR50	0.8	-	-	ns
CMD Output						
T_{ODLY}	Output delay time during data transfer mode	DDR50	-	-	13.7	ns
T_{OHLD}	Output hold time	DDR50	1.5	-	-	ns
DAT [3:0] Input						
T_{IS2X}	Input hold time	DDR50	3	-	-	ns
T_{IH2X}	Input hold time	DDR50	0.8	-	-	ns
DAT [3:0] Output						
$T_{ODLY2X(max)}$	Output delay time during data transfer mode	DDR50	-	-	7	ns
$T_{ODLY2X(min)}$	Output hold time	DDR50	1.5	-	-	ns

SDIO Timing Data - DDR50 Mode (50MHz)

The information contained herein is the exclusive property of AzureWave and shall not be distributed, reproduced, or disclosed in whole or in part without prior written permission of AzureWave.

3.4.3 PCM Interface

3.4.3.1 PCM Timing Specification – Master Mode

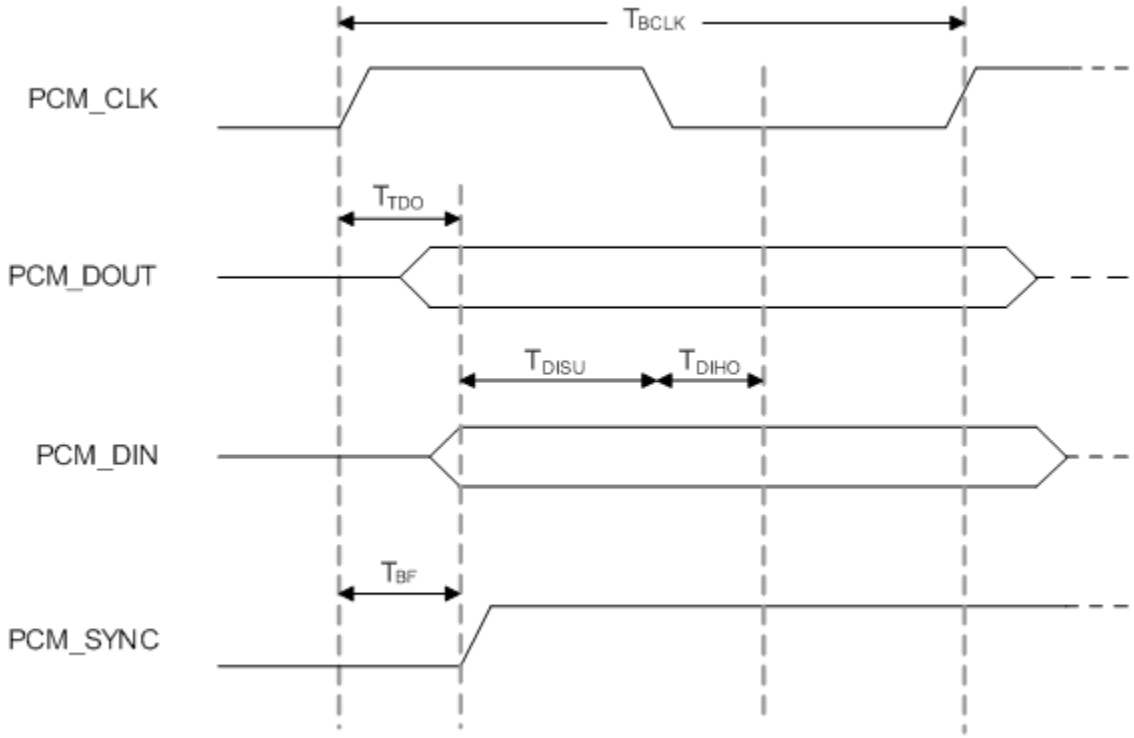

Symbol	Parameter	Condition	Min	Typ	Max	Units
F_{BCLK}	--	--	--	2/2.048	--	MHz
Duty $Cycle_{BCLK}$	--	--	0.4	0.5	0.6	--
$T_{BCLK\ rise/fall}$	--	--	--	3	--	ns
T_{DO}	--	--	--	--	15	ns
T_{DISU}	--	--	20	--	--	ns
T_{DIHO}	--	--	15	--	--	ns
T_{BF}	--	--	--	--	15	ns

The information contained herein is the exclusive property of AzureWave and shall not be distributed, reproduced, or disclosed in whole or in part without prior written permission of AzureWave.

3.4.3.2 PCM Timing Specification – Slave Mode

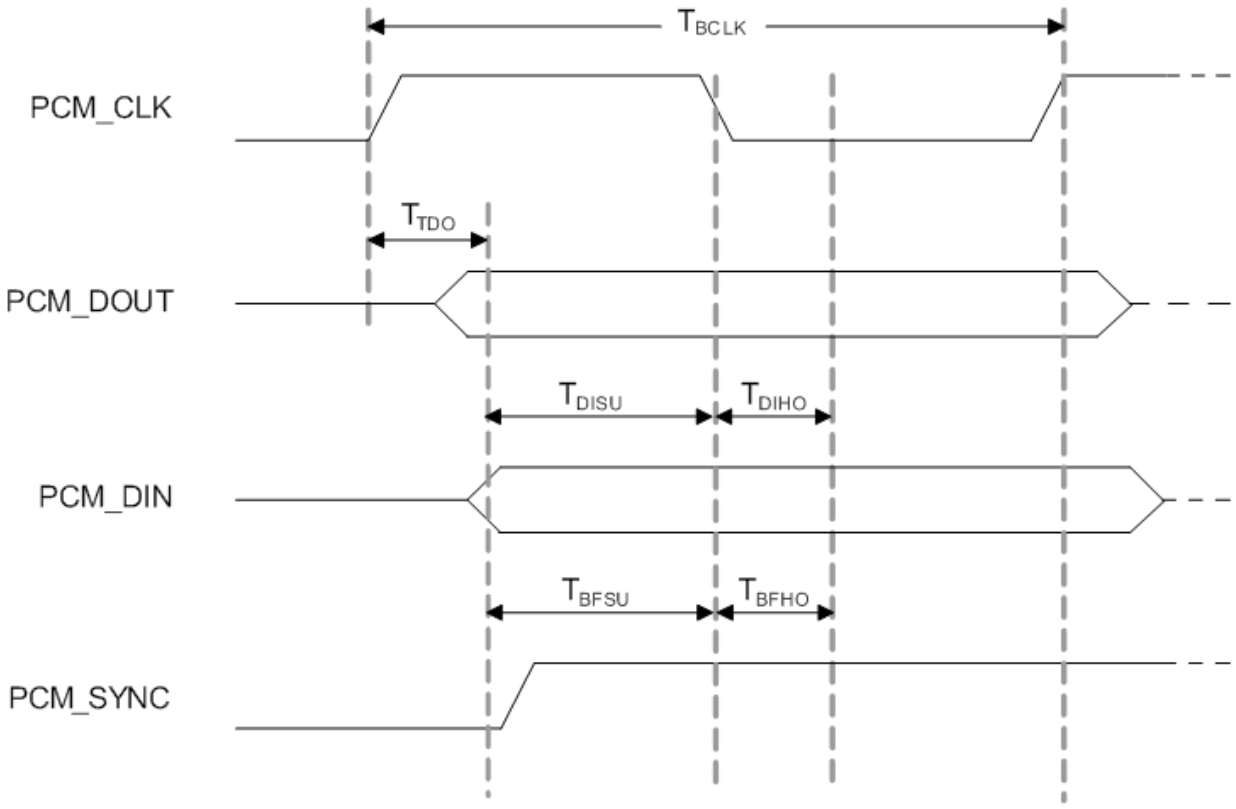

Symbol	Parameter	Condition	Min	Typ	Max	Units
F_{BCLK}	--	--	--	2/2.048	--	MHz
Duty $Cycle_{BCLK}$	--	--	0.4	0.5	0.6	--
$T_{BCLK\ rise/fall}$	--	--	--	3	--	ns
T_{DO}	--	--	--	--	30	ns
T_{DISU}	--	--	15	--	--	ns
T_{DIHO}	--	--	10	--	--	ns
T_{BFSU}	--	--	15	--	--	ns
T_{BFHO}			10		--	ns

The information contained herein is the exclusive property of AzureWave and shall not be distributed, reproduced, or disclosed in whole or in part without prior written permission of AzureWave.

3.5 Timing Sequence

AW-AM281SM power up timing sequence.

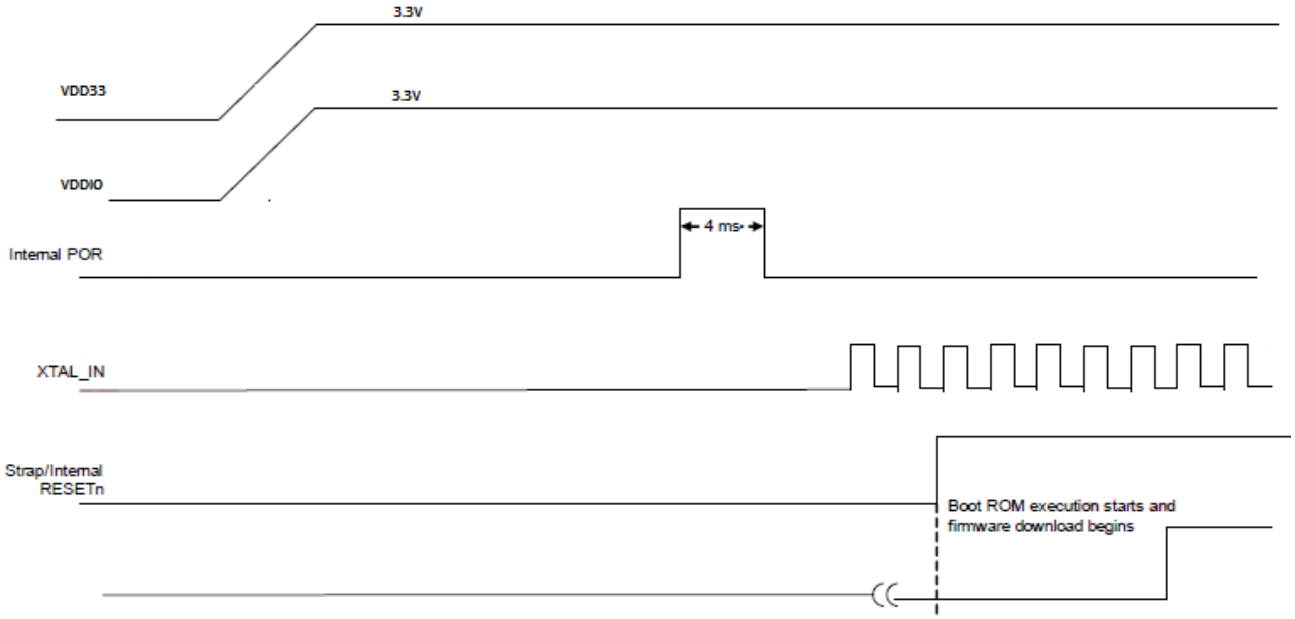

The information contained herein is the exclusive property of AzureWave and shall not be distributed, reproduced, or disclosed in whole or in part without prior written permission of AzureWave.

3.6 Power Consumption*

3.6.1 WLAN

Band (GHz)	Item			VBAT=3.3V			
	Mode	BW (MHz)	RF Power (dBm)	Transmit		Receive	
				Max.	Avg.	Max.	Avg.
2.4G	11b@1Mbps	20	16	272.6mA	270.3mA	46.5mA	38.7mA
	11g@54Mbps	20	14	203.3mA	200.8mA	49.1mA	42.0mA
	11n@MCS7	20	13	200.7mA	198.8mA	48.6mA	41.6mA
	11n@MCS7	40	11	187.3mA	185.8mA	55.5mA	48.4mA
	11a@54Mbps	20	13	158.3mA	143.5mA	80.5mA	70.1mA
	11n@MCS7	20	12	260.1mA	248.3mA	74.6mA	64.1mA
5G	11n@MCS7	40	10	239.3mA	227.9mA	80.2mA	69.7mA

* The power consumption is based on Azurewave test environment, these data for reference only.

3.6.2 Bluetooth

No.	Mode	VBAT=3.3V			
		Transmit		Receive	
		Max.	Avg.	Max.	Avg.
1	DH5	23.1mA	22.6mA	N/A	N/A
2	3DH5	29.5mA	26.9mA	N/A	N/A
3	LE	13.1mA	12.4mA	12.9mA	10.2mA

* The power consumption is based on Azurewave test environment, these data for reference only.

The information contained herein is the exclusive property of AzureWave and shall not be distributed, reproduced, or disclosed in whole or in part without prior written permission of AzureWave.

3.7 Sleep Clock

An external crystal is used for generating all radio frequencies and normal operation clocking. As an alternative, an external frequency reference driven by a temperature-compensated crystal oscillator (TCXO) signal may be used. No software settings are required to differentiate between the two. In addition, a low-power oscillator (LPO) is provided for lower power mode timing.

External 32.768KHz Low-Power Oscillator

Symbol	Parameter	Min	Typ	Max	Units
CLK	Clock frequency range/ accuracy ■ CMOS input clock signal type ■ ±250 ppm (initial, aging, temperature)	-	32.768	-	kHz
V_{IH}*	Input levels, where VDDIO=1.8, 3.3V	0.7*VDDIO	-	VDDIO+0.4	V
V_{IL}*		-0.4	-	0.3*VDDIO	V
PN	Phase noise requirement (@ 100KHz)	-	-125	-	dBc/Hz
J_C	Cycle jitter	-	1.5	-	ns (RMS)
SR	Slew rate limit (10-90%)	-	-	100	ns
DC	Duty cycle tolerance	20	-	80	%

*For V_{HL},V_{IL}, see 3.3 Digital IO Pin DC Characteristics

The information contained herein is the exclusive property of AzureWave and shall not be distributed, reproduced, or disclosed in whole or in part without prior written permission of AzureWave.

4. Mechanical Information

4.1 Mechanical Drawing

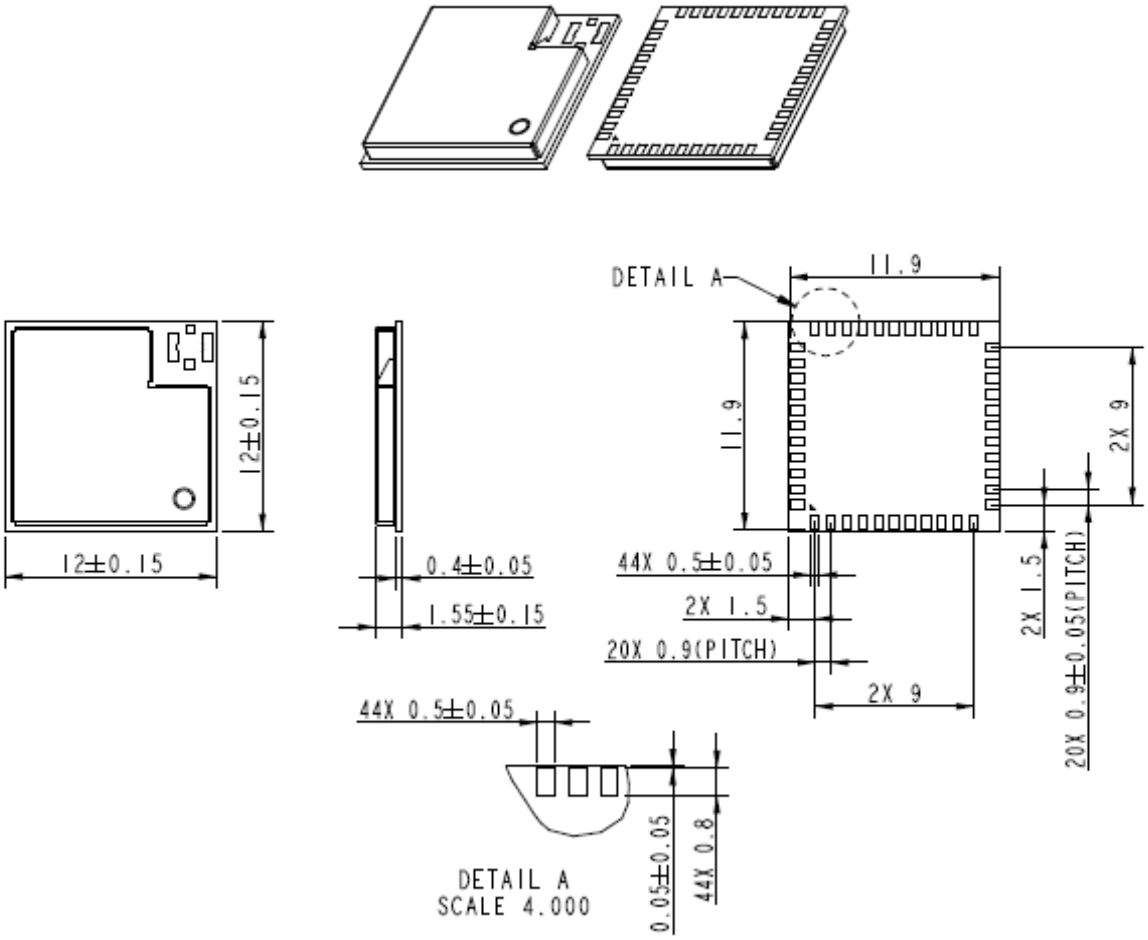

TOLERANCES UNLESS OTHERWISE SPECIFIED:±0.1mm

The information contained herein is the exclusive property of AzureWave and shall not be distributed, reproduced, or disclosed in whole or in part without prior written permission of AzureWave.

5. Packaging Information

1. One reel can pack 1,500pcs 12x12 stamp modules
2. One production label is pasted on the reel, one desiccant and one humidity indicator card are put on the reel

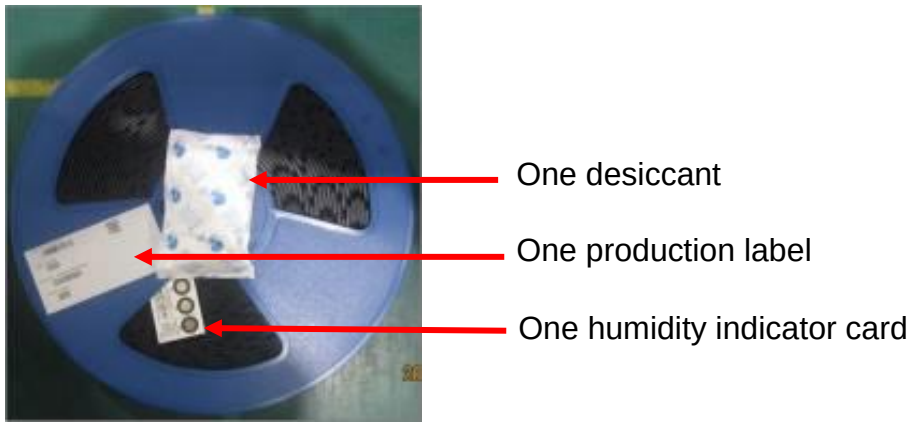

3. One reel is put into the anti-static moisture barrier bag, and then one label is pasted on the bag

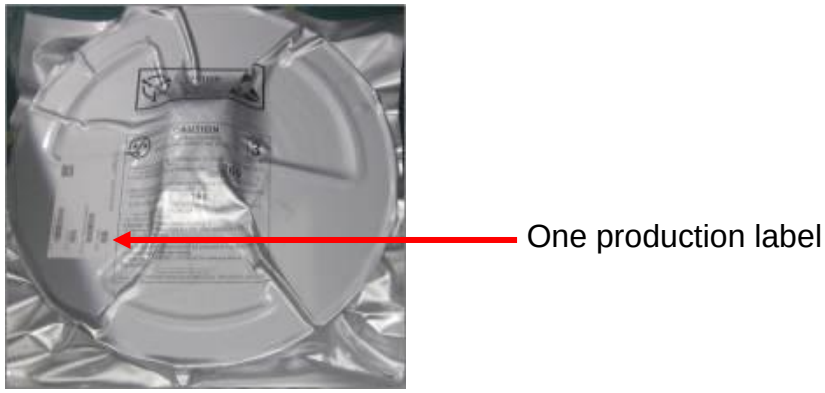

4. A bag is put into the anti-static pink bubble wrap

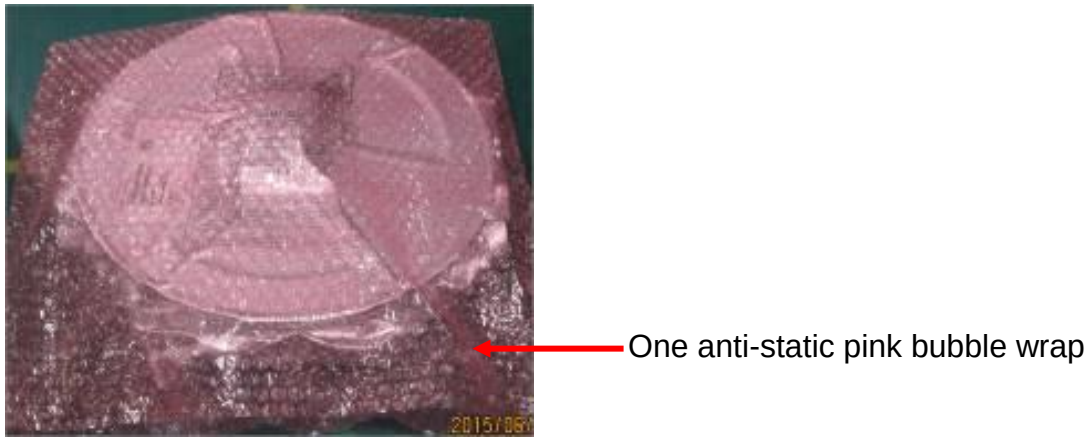

The information contained herein is the exclusive property of AzureWave and shall not be distributed, reproduced, or disclosed in whole or in part without prior written permission of AzureWave.

5. A bubble wrap is put into the inner box and then one label is pasted on the inner box



One production label

6. 5 inner boxes could be put into one carton



7. Sealing the carton by AzureWave tape



The information contained herein is the exclusive property of AzureWave and shall not be distributed, reproduced, or disclosed in whole or in part without prior written permission of AzureWave.

8. One carton label and one box label are pasted on the carton. If one carton is not full, one balance label pasted on the carton



Example of carton label	AzureWave Technologies Inc. AzureWave P/N Customer: 由業務提供 Customer P/N: 由業務提供 Customer PO: 由業務提供 Description: AW-XXXXXX QTY: 1200 pcs C/N N.W. G.W. RoHS COMPLIANT
Example of box label	
Example of production label	
Example of balance label	

Note:

- **1 reel = 1 inner box = 1,500pcs**
- **1 carton = 5 inner boxes = 5 * 1,500pcs = 7,500pcs**

The information contained herein is the exclusive property of AzureWave and shall not be distributed, reproduced, or disclosed in whole or in part without prior written permission of AzureWave.