Radial Leaded Aluminum Conductive Polymer Electrolytic Capacitors

RPF Series



FEATURES

- Long life time, low ESR
- Endurance: 5000 hours at 105°C
- RoHS Compliance and Halogen-free

LEAD-FREE
LEAD-FREE COMPATIBLE COMPONENT

RoHS COMPLIANT

APPLICATIONS

- System board, graphic cards
- DC/DC Converter, game console, servers

HOW TO ORDER

R	PF	0811	681	M	010	K	-
Product Type Aluminum	**Series Type**	**Case Size** See table below	**Capacitance Code** µF code: 1st two digits represent significant figures, 3rd digit represents multiplier (number of zeros to follow)	**Tolerance** M = ±20%	**Rated DC Voltage** 006 = 6.3Vdc, 010 = 10Vdc, 016 = 16Vdc, 025 = 25Vdc, 035 = 35Vdc, 050 = 50Vdc, 063 = 63Vdc, 080 = 80Vdc, 100 = 100Vdc	**Packaging** K = Ammo Pack, B = Bulk Pack	**Lead Type** " " empty = Standard long lead, "C"= Lead cut only, "F"= Lead cut and form, "L"= Lead cut and bend (Left), "R"= Lead cut and bend (Right)

CASE DIMENSIONS millimeters (inches)

Code	D'-0.30 (0.012) +0.50 (0.020)	L'-0.50 (0.020) +1.00 (0.039)	d±0.05 (0.002)	F±0.50 (0.020)	Typical Weight (g)	Code	D'-0.30 (0.012) +0.50 (0.020)	L'-0.50 (0.020) +1.00 (0.039)	d±0.05 (0.002)	F±0.50 (0.020)	Typical Weight (g)
0507	5.00 (0.197)	7.00 (0.276)	0.50 (0.020)	2.00 (0.079)	0.28	0811	8.00 (0.315)	11.00 (0.433)	0.60 (0.024)	3.50 (0.138)	0.82
0508	5.00 (0.197)	8.00 (0.315)	0.50 (0.020)	2.00 (0.079)	0.30	0813	8.00 (0.315)	13.00 (0.512)	0.60 (0.024)	3.50 (0.138)	0.91
0509	5.00 (0.197)	9.00 (0.354)	0.50 (0.020)	2.00 (0.079)	0.34	0814	8.00 (0.315)	14.00 (0.551)	0.60 (0.024)	3.50 (0.138)	1.05
0510	5.00 (0.197)	10.00 (0.394)	0.50 (0.020)	2.00 (0.079)	0.38	0816	8.00 (0.315)	16.00 (0.630)	0.60 (0.024)	3.50 (0.138)	1.14
5509	5.50 (0.217)	9.00 (0.354)	0.50 (0.020)	2.50 (0.098)	0.38	1012	10.00 (0.394)	12.00 (0.472)	0.60 (0.024)	5.00 (0.197)	1.22
0605	6.30 (0.248)	5.00 (0.197)	0.50 (0.020)	2.50 (0.098)	0.31	1013	10.00 (0.394)	13.00 (0.512)	0.60 (0.024)	5.00 (0.197)	1.35
0607	6.30 (0.248)	7.00 (0.276)	0.50 (0.020)	2.50 (0.098)	0.37	1014	10.00 (0.394)	14.00 (0.551)	0.60 (0.024)	5.00 (0.197)	1.55
0608	6.30 (0.248)	8.00 (0.315)	0.50 (0.020)	2.50 (0.098)	0.42	1015	10.00 (0.394)	15.00 (0.591)	0.60 (0.024)	5.00 (0.197)	1.62
0609	6.30 (0.248)	9.00 (0.354)	0.50 (0.020)	2.50 (0.098)	0.45	1016	10.00 (0.394)	16.00 (0.630)	0.60 (0.024)	5.00 (0.197)	1.74
0610	6.30 (0.248)	10.00 (0.394)	0.50 (0.020)	2.50 (0.098)	0.54	1017	10.00 (0.394)	17.00 (0.669)	0.60 (0.024)	5.00 (0.197)	1.88
0611	6.30 (0.248)	11.00 (0.433)	0.50 (0.020)	2.50 (0.098)	0.58	1018	10.00 (0.394)	18.00 (0.709)	0.60 (0.024)	5.00 (0.197)	1.93
0809	8.00 (0.315)	9.00 (0.354)	0.60 (0.024)	3.50 (0.138)	0.67						

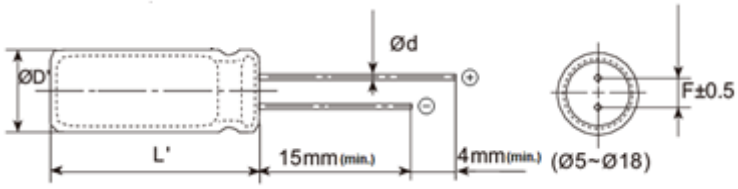

*If different rubber seal is needed, please contact your sales representative.

The Important Information/Disclaimer is incorporated in the catalog where these specifications came from or available online at www.kyocera-avx.com/disclaimer/ by reference and should be reviewed in full before placing any order.

Radial Leaded Aluminum Conductive Polymer Electrolytic Capacitors

RPF Series

TECHNICAL SPECIFICATIONS

Category Temperature Range:	-55°C to +105°C	
Capacitance Range	At 25°C, 120Hz	4.7µF to 3300µF
Capacitance Tolerance:	At 25°C, 120Hz	±20%
Dissipation Factor (%)	Measurement Frequency: 120Hz at 25°C	Please see the ratings and part number reference table below
Leakage Current:	After 2 minutes at rated working voltage at 25°C*	I ≦ 0.2CV or 500µA, whichever is greater

* Note: In the case of an anomalous reading, re-measure the leakage current after following voltage treatment:
Voltage treatment: DC rated voltage to be applied to the capacitors for 120 minutes at 105°C.

MARKING

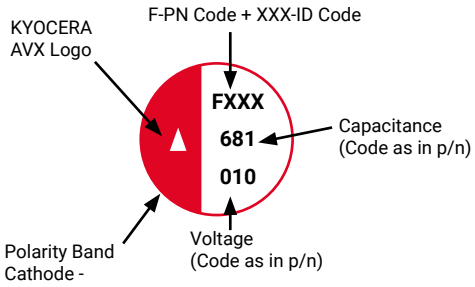

CAPACITANCE AND RATED VOLTAGE RANGE (FIGURES DENOTES CASE SIZE)

Capacitance		Rated Voltage DC (V_R)								
µF	**Code**	**6.3V**	**10V**	**16V**	**25V**	**35V**	**50V**	**63V**	**80V**	**100V**
4.7	4R7									0608
10	100					0508	0508	0605		0610
15	150									0811
22	220					0509	0607		0610	
33	330					0509	0607	0608	0811	1014
47	470					0607	0608	0609	1012	
56	560						0608	0809		
68	680					0607	0610	0811		
82	820							0811		
100	101			0605		0608 0811	0811	1012	1014	
150	151				0610			1012		
180	181				0809					
220	221	0507	0509 0608		0811	0811 1012	1012	1015		
270	271	0507		0608 0809	0811		1013	1017		
330	331	0508 0605 0608	0608	5509	0811	1012	1015	1018		
390	391	0509								
470	471	0510 0608	0608	0611	0811 1012	1013	1018			
560	561	5509 0608	0610							
680	681	5509 0609 0809	0811	1012 0811		1016				
820	821	0609	0811	0813	0816 1018	1018				
1000	102	0610 0809 0811				1018				
1200	122	0811								
1500	152	0811 1012								
2200	222	0814								
3300	332	1014								

Released ratings

The Important Information/Disclaimer is incorporated in the catalog where these specifications came from or available online at www.kyocera-avx.com/disclaimer/ by reference and should be reviewed in full before placing any order.

RATINGS & PART NUMBER REFERENCE

Part No.	Case Size	Capacitance (µF)	Rated Voltage (V)	DCL Max. (µA)	DF Max. (%)	ESR Max. @100kHz (mΩ)	100kHz RMS Current (mA)	MSL
6.3 Volt								
RPF0507221M006*	5007	220	6.3	500	8	22	3100	1
RPF0507271M006*	0507	270	6.3	500	8	22	3400	1
RPF0508331M006*	0508	330	6.3	500	8	22	3600	1
RPF0605331M006*	0605	330	6.3	500	8	27	2800	1
RPF0608331M006*	0608	330	6.3	500	8	16	3600	1
RPF0509391M006*	0509	390	6.3	500	8	22	3600	1
RPF0510471M006*	0510	470	6.3	592	8	22	3800	1
RPF0608471M006*	0608	470	6.3	592	8	16	3900	1
RPF5509561M006*	5509	560	6.3	706	8	22	3800	1
RPF0608561M006*	0608	560	6.3	706	8	22	4300	1
RPF5509681M006*	5509	680	6.3	857	8	22	4300	1
RPF0609681M006*	0609	680	6.3	857	8	22	4500	1
RPF0809681M006*	0809	680	6.3	857	8	22	4100	1
RPF0609821M006*	0609	820	6.3	1033	8	22	4500	1
RPF0610102M006*	0610	1000	6.3	1260	8	11	4600	1
RPF0809102M006*	0809	1000	6.3	1260	8	13	4300	1
RPF0811102M006*	0811	1000	6.3	1260	8	11	4600	1
RPF0811122M006*	0811	1200	6.3	1512	8	11	4700	1
RPF0811152M006*	0811	1500	6.3	1890	8	11	4800	1
RPF1012152M006*	1012	1500	6.3	1890	8	11	4900	1
RPF0814222M006*	0814	2200	6.3	2772	8	11	5100	1
RPF1014332M006*	1014	3300	6.3	4158	8	11	5300	1
10 Volt								
RPF0509221M010*	0509	220	10	500	12	22	2500	1
RPF0608221M010*	0608	220	10	500	12	16	2800	1
RPF0608331M010*	0608	330	10	660	12	22	2900	1
RPF0608471M010*	0608	470	10	940	12	22	3100	1
RPF0610561M010*	0610	560	10	1120	12	14	3200	1
RPF0811681M010*	0811	680	10	1360	12	13	3500	1
RPF0811821M010*	0811	820	10	1640	12	13	3600	1
16 Volt								
RPF0605101M016*	0605	100	16	500	12	27	1800	1
RPF0608271M016*	0608	270	16	864	12	22	2500	1
RPF0809271M016*	0809	270	16	864	12	22	2600	1
RPF5509331M016*	5509	330	16	1056	12	22	2600	1
RPF1012681M016*	1012	680	16	2176	12	13	3200	1
RPF0813821M016*	0813	820	16	2624	12	12	3100	1
RPF0611471M016*	0611	470	16	1504	12	16	2800	1
RPF0811681M016*	0811	680	16	2176	12	16	3000	1
25 Volt								
RPF0610151M025*	0610	150	25	750	12	22	2500	1
RPF0809181M025*	0809	180	25	900	12	33	2200	1
RPF0811221M025*	0811	220	25	1100	12	22	2700	1
RPF0811271M025*	0811	270	25	1350	12	22	2700	1
RPF0811331M025*	0811	330	25	1650	12	22	2700	1
RPF0811471M025*	0811	470	25	2350	12	22	2700	1
RPF1012471M025*	1012	470	25	2350	12	22	3600	1
RPF0816821M025*	0816	820	25	4100	12	22	3200	1
RPF1018821M025*	1018	820	25	4100	12	22	4000	1
35 Volt								
RPF0508100M035*	0508	10	35	500	12	66	1600	1
RPF0509220M035*	0509	22	35	500	12	110	1700	1
RPF0509330M035*	0509	33	35	500	12	55	1800	1
RPF0607470M035*	0607	47	35	500	12	55	1800	1
RPF0607680M035*	0607	68	35	500	12	55	1900	1
RPF0608101M035*	0608	100	35	700	12	55	2100	1
RPF0811101M035*	0811	100	35	700	12	44	2300	1
RPF0811221M035*	0811	220	35	1540	12	44	2500	1
RPF1012221M035*	1012	220	35	1540	12	33	2600	1

Radial Leaded Aluminum Conductive Polymer Electrolytic Capacitors

RPF Series

Part No.	Case Size	Capacitance (µF)	Rated Voltage (V)	DCL Max. (µA)	DF Max. (%)	ESR Max. @100kHz (mΩ)	100kHz RMS Current (mA)	MSL
RPF1012331M035*	1012	330	35	2310	12	33	2700	1
RPF1013471M035*	1013	470	35	3290	12	22	2800	1
RPF1016681M035*	1016	680	35	4760	12	22	3000	1
RPF1018821M035*	1018	820	35	5000	12	22	3100	1
RPF1018102M035*	1018	1000	35	5000	12	22	3300	1
50 Volt								
RPF0508100M050*	0508	10	50	500	12	77	1400	1
RPF0607220M050*	0607	22	50	500	12	44	1700	1
RPF0607330M050*	0607	33	50	500	12	44	1800	1
RPF0608470M050*	0608	47	50	500	12	38	1800	1
RPF0608560M050*	0608	56	50	560	12	38	1900	1
RPF0610680M050*	0610	68	50	680	12	33	1900	1
RPF0811101M050*	0811	100	50	1000	12	33	2000	1
RPF1012221M050*	1012	220	50	2200	12	33	2400	1
RPF1013271M050*	1013	270	50	2700	12	22	2600	1
RPF1015331M050*	1015	330	50	3300	12	22	2700	1
RPF1018471M050*	1018	470	50	4700	12	22	2800	1
63 Volt								
RPF0605100M063*	0605	10	63	500	12	66	1400	1
RPF0608330M063*	0608	33	63	500	12	33	1500	1
RPF0609470M063*	0609	47	63	592	12	33	1700	1
RPF0809560M063*	0809	56	63	706	12	33	1600	1
RPF0811680M063*	0811	68	63	857	12	33	1800	1
RPF0811820M063*	0811	82	63	1033	12	33	1800	1
RPF1012101M063*	1012	100	63	1260	12	33	1900	1
RPF1012151M063*	1012	150	63	1890	12	33	2200	1
RPF1015221M063*	1015	220	63	2772	12	22	2300	1
RPF1017271M063*	1017	270	63	3402	12	22	2500	1
RPF1018331M063*	1018	330	63	4158	12	22	2600	1
80 Volt								
RPF0610220M080*	0610	22	80	500	12	66	1400	1
RPF0811330M080*	0811	33	80	528	12	38	1500	1
RPF1012470M080*	1012	47	80	752	12	38	1600	1
RPF1014101M080*	1014	100	80	1600	12	38	1800	1
100 Volt								
RPF06084R7M100*	0608	4.7	100	500	15	132	1200	1
RPF0610100M100*	0610	10	100	500	15	55	1300	1
RPF0811150M100*	0811	15	100	500	15	55	1300	1
RPF1014330M100*	1014	33	100	600	15	38	1400	1

* Used to denote packing type: "K" for Ammo Pack or "B" for Bulk.
All technical data relates to an ambient temperature of +25C. Capacitance and DF are measured at 120Hz, 0.5RMS with DC bias of 2.2 volts. DCL is measured at rated voltage after 2 minutes

QUALIFICATION TABLE

Test	RPF Series (Temperature Range -55°C to +105°C)		
	Condition	Characteristics	
Temperature Characteristics (Impedance Ratio at 100kHz)	Z(+105°C)/Z(+20°C)≤1.25 Z(-55°C)/Z(+20°C)≤1.25		
Endurance	After applying rated voltage for 5000 hours at 105°C, the capacitors shall meet the following requirements.	**Visual examination**	no visible damage
		ΔC/C	≦ ±20% of the initial limit
		DF:	≦ 150% of the initial specified limit
		ESR:	≦ 150% of the initial specified limit
		DCL:	≦ Initial specified limit
Humidity Test	After subjecting to 90-95%RH for 2000 hours at 60°C without voltage applied, the capacitors shall meet the specified values for the Endurance characteristics listed above.		
Surge Test	After subjecting to 1000 cycles each consisting of charge with the surge voltage specified at normal temperature for 30 seconds through a protective resistor and discharge for 5 minutes 30 seconds, the capacitors shall meet the following requirements.	**Visual examination**	no visible damage
		ΔC/C	≦ ±20% of the initial limit
		DF:	≦ 150% of the initial specified limit
		ESR:	≦ 150% of the initial specified limit
		DCL:	≦ Initial specified limit

SOLDERING

1. When soldering with a soldering iron:
   - Soldering conditions (temperature and time) should be within the limits prescribed in the catalogs or the product specifications.
   - If the terminal spacing of a capacitor does not fit the terminal hole spacing of the PC board, reform the terminals in a manner to minimize a mechanical stress into the body of the capacitor.
   - Remove the capacitors from the PC board, after the solder is completely melted, reworking by using a soldering iron minimizes the mechanical stress to the capacitors.
   - Do not touch the capacitor body with the hot tip of the soldering iron.
2. Flow Soldering:
   - Do not dip the body of a capacitor into the solder bath, only dip the terminals in. The soldering must be done on the reverse side of PC board.
   - Do not apply flux to any part of capacitors other than their terminals.
   - Make sure the capacitors do not come into contact with any other components while soldering.
   - Soldering conditions (preheat, solder temperature and dipping time) should be within the limits prescribed in the picture below.

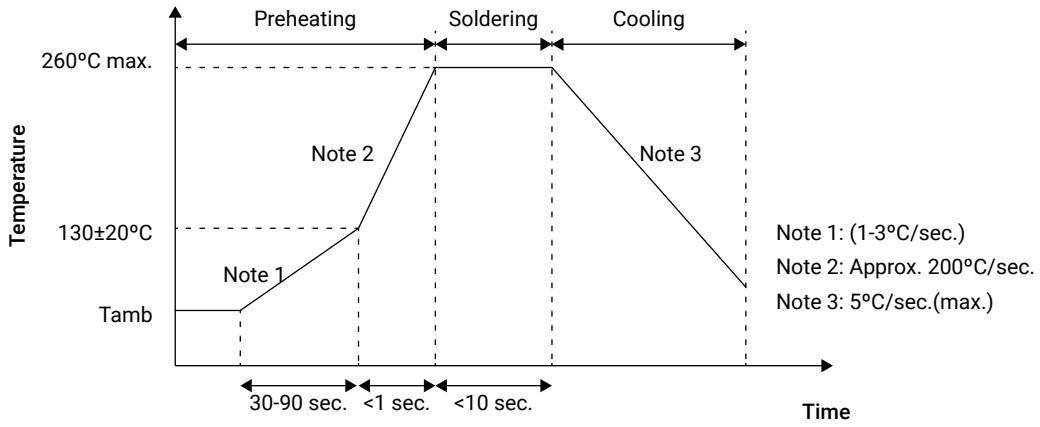

STORAGE

- Store with the temperature range between 5 to 35°C (If between 35 to 85°C, it should be less than three months), and the relative humidity of 75% without direct sunshine and store in the package states if possible.
- It is recommended that you open the bag just before use and use up as early as possible.
- Store the capacitors in places free from water, oil or salt water or in condensation status.
- Never store in any area filled with poisonous gases (including hydrogen sulfide, sulfurous acid, nitrous acid, chlorine and ammonia).
- Store the capacitors in places free from ozone, ultraviolet rays or radiation:

  (Radial Lead Type)

  Before unseal: within 1 year after delivery

  After opening: within 1 month

The Important Information/Disclaimer is incorporated in the catalog where these specifications came from or available online at www.kyocera-avx.com/disclaimer/ by reference and should be reviewed in full before placing any order.

PACKING

Size Code	Bulk Pack					Ammo Pack				
	Bags	Inner Box (LxWxH) 290*216*158		Carton (LxWxH) 455*310*350		Inner Box		Carton		
	Quantity	Bags Number	Quantity / pcs	Inner Box Number	Quantity / pcs	Quantity	Inner Box Size (LxWxH)	Inner Box Quantity	Carton Size (LxWxH)	Whole Pieces
0507	1000	15	15,000	4	60,000	2000	320x230x50	10	485x345x275	20,000
0508	1000	12	12,000	4	48,000	2000	320x230x50	10	485x345x275	20,000
0509	1000	12	12,000	4	48,000	2000	320x230x50	10	485x345x275	20,000
0510	1000	12	12,000	4	48,000	2000	320x230x50	10	485x345x275	20,000
5509	1000	12	12,000	4	48,000	2000	320x230x50	10	485x345x275	20,000
0605	1000	10	10,000	4	40,000	2000	340x290x48	10	600x354x265	20,000
0607	1000	10	10,000	4	40,000	2000	340x290x48	10	600x354x265	20,000
0608	1000	8	8000	4	32,000	2000	340x290x48	10	600x354x265	20,000
0609	1000	8	8000	4	32,000	2000	340x290x48	10	600x354x265	20,000
0610	1000	8	8000	4	32,000	2000	340x290x48	10	600x354x265	20,000
0611	1000	8	8000	4	32,000	2000	340x290x48	10	600x354x265	20,000
0809	500	10	5000	4	20,000	950	320x230x50	6	485x345x275	5700
0811	500	10	5000	4	20,000	950	320x230x50	6	485x345x275	5700
0813	500	10	5000	4	20,000	950	320x230x50	10	485x345x275	9500
0814	500	10	5000	4	20,000	950	320x230x50	6	485x345x275	5700
0816	300	10	3000	4	12,000	950	320x230x55	6	485x345x300	5700
1012	250	10	2500	4	10,000	600	320x230x50	6	485x345x275	3600
1013	250	10	2500	4	10,000	600	320x230x50	6	485x345x275	3600
1014	200	10	2000	4	8000	600	320x230x50	10	485x345x275	6000
1015	200	10	2000	4	8000	600	320x230x55	10	485x345x300	6000
1016	250	10	2500	4	10,000	600	320x230x55	6	485x345x300	3600
1017	250	10	2500	4	10,000	600	320x230x55	10	485x345x300	6000
1018	200	10	2000	4	8000	600	320x230x55	10	485x345x300	6000

AMMO PACKING

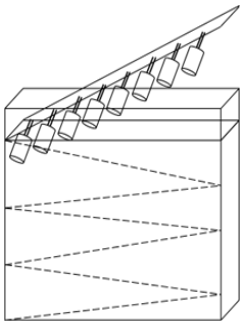

BULK PACKING

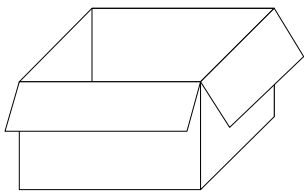

The Important Information/Disclaimer is incorporated in the catalog where these specifications came from or available online at www.kyocera-avx.com/disclaimer/ by reference and should be reviewed in full before placing any order.

LEAD FORMING TAPING SPECIFICATIONS FOR AMMO PACK

Case Diameter	5mm	5.5mm	6.3mm	8mm	10mm
Figure #	Fig. 1	Fig. 1	Fig. 1	Fig. 1	Fig. 2

Fig.1

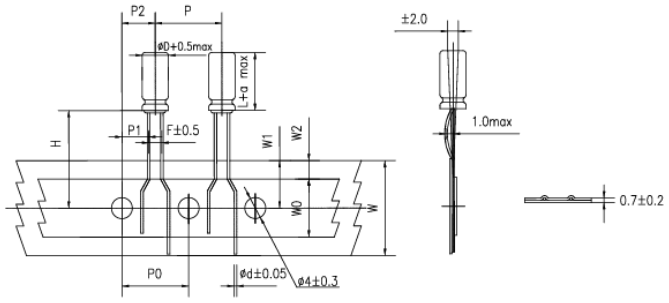

Fig.2

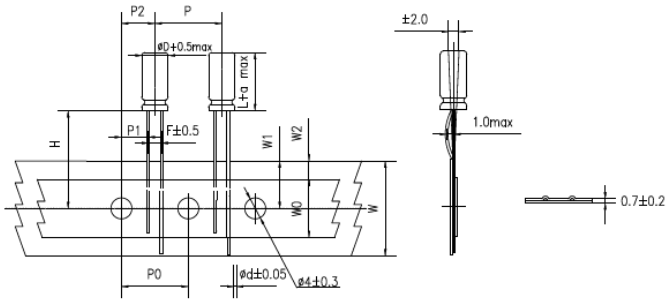

Items	Symbol	Case Size						Tolerance
		0507 0508 0509 0510 5509	0605	0607 0608 0609 0610 0611	0809 0811 0813 0814	0816	1012 1013 1014 1015 1016 1017 1018	
Lead Wire Diameter	d	0.45	0.45	0.5	0.5	0.5/0.6	0.6	±0.05
Pitch of Body	P	12.7	12.7	12.7	12.7	12.7	12.7	±1.0
Feed Hole Pitch	P0	12.7	12.7	12.7	12.7	12.7	12.7	±0.2
Distance from Hole Center to Lead	P1	5.35	5.1	5.1	4.6	4.6	3.85	±0.7
Distance from Feed Hole Center to Body Center	P2	6.35	6.35	6.35	6.35	6.35	6.35	±1.0
Lead-to-lead distance	F	2.0	2.5	2.5	3.5	3.5	5.0	±0.5
Height of Body from Tape Center	H	18.5	18.5	18.5	18.5	18.5	18.5	±0.75
Base Tape Width	W	18.0	18.0	18.0	18.0	18.0	18.0	±0.5
Adhesive Tape Width	W0	6.0	6.0	8.0	8.0	8.0	11.0	min
Hole Position	W1	9.0	9.0	9.0	9.0	9.0	9.0	+0.75-0.5
Hole Down Tape Position	W2	1.5	1.5	1.5	1.5	1.5	1.5	max

*All dimensions in mm

The Important Information/Disclaimer is incorporated in the catalog where these specifications came from or available online at www.kyocera-avx.com/disclaimer/ by reference and should be reviewed in full before placing any order.

TERMINATION TYPE

Letter " ": Empty = Standard Long lead.

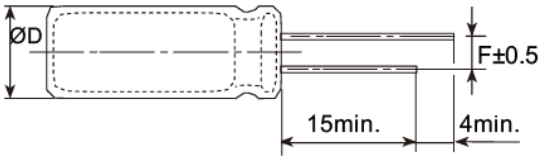

Letter "C": Lead cut only.

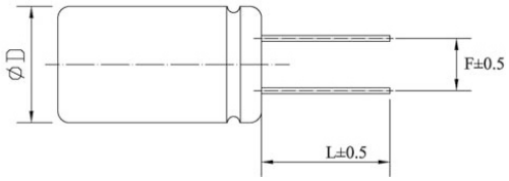

Letter "F": Lead cut and form.

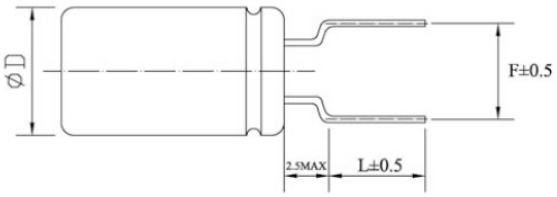

Letter "R": Lead cut and bend (Right).

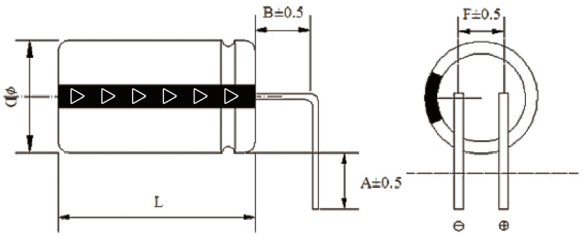

Letter "L": Lead cut and bend (Left).

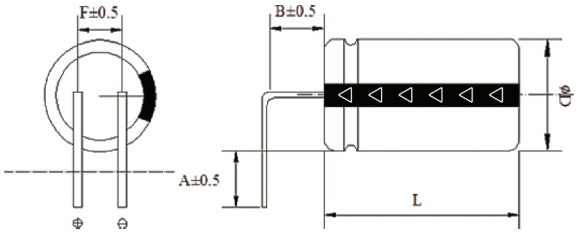

Letter	Termination Type	Dø	4ø	5ø	6.3ø	8ø	10ø	12.5ø	13ø	16ø	18ø
	Standard long lead	F	1.50	2.00	2.50	3.50	5.00	5.00	5.00	7.50	7.50
C	Lead cut only	F	1.50	2.00	2.50	3.50	5.00	5.00	5.00	7.50	7.50
		L	3.30	3.30	3.30	3.30	3.30	3.30	3.30	3.30	3.30
F	Lead cut and form	F	5.00	5.00	5.00	5.00					
		L	3.50	3.50	3.50	3.50					
R / L	Lead cut and bend	F					5.00	5.00	5.00	7.50	7.50
		A					3.50	3.50	3.50	3.50	3.50
		B					2.50	2.50	2.50	2.50	2.50

*All dimensions in mm.

The Important Information/Disclaimer is incorporated in the catalog where these specifications came from or available online at www.kyocera-avx.com/disclaimer/ by reference and should be reviewed in full before placing any order.