TECHNICAL REFERENCE NOTE

ARTESYN CSU1300AP SERIES

1300 Watts Distributed Power System



PRODUCT DESCRIPTION

Advanced Energy's CSU1300AP power supply is housed in a 1U high rack-mount enclosure measuring just 2.89 x 7.28 in (73.5 x 185.0 mm). This form factor is significantly narrower and shorter than that of similarly rated earlier generation power supplies — freeing up valuable system space — and is achieved by use of the latest power switching technology and high density component packaging techniques. This form factor conforms to the standard market's Common Redundant Power Supplies.

AT A GLANCE

Total Power:

1300 Watts

Input Voltage:

90 to 264 Vac

180 to 300 Vdc

# of Outputs:

Main and Standby

SPECIAL FEATURES

- 1300W output power
- High power and short form factor
- 1U power supply
- High density design: 39W/in^3
- Active power factor correction
- EN61000-3-2 harmonic compliance
- Inrush current control
- 80 PLUS® Platinum efficiency
- N+M redundant N+M ≤ 4
- Hot-pluggable
- Active current sharing
- Full digital control
- Cold redundancy
- EN61000-4-5 surge level ±1KV/±2KV DM/CM
- Black box
- Boot loader
- PMBus™ compliant

SAFETY

- UL/cUL
- UL + CB Report
- CE Mark
- CCC
- BSMI
- KC
- TUV
- UKCA Mark

TYPICAL APPLICATIONS

- Industrial

©2021 Advanced Energy Industries, Inc.

MODEL NUMBERS

Standard	Output Voltage	Minimum Load	Maximum Load	Stand-By Supply	Air Flow Direction
CSU1300AP-3-600	12.2Vdc	1A	108.33A	12Vdc@3A	Normal (DC connector to handle)

Options

None

ELECTRICAL SPECIFICATIONS

Absolute Maximum Ratings

Stress in excess of those listed in the "Absolute Maximum Ratings" may cause permanent damage to the power supply. These are stress ratings only and functional operation of the unit is not implied at these or any other conditions above those given in the operational sections of this TRN. Exposure to any absolute maximum rated condition for extended periods may adversely affect the power supply's reliability.

Table 1. Absolute Maximum Ratings

Parameter	Models	Symbol	Min	Typ	Max	Unit
Input Voltage						
AC continuous operation	All models	$V_{IN,AC}$	90	-	264	Vac
DC continuous operation	All models	$V_{IN,DC}$	180	-	300	Vdc
Maximum Output Power						
$V_{IN,AC} \leq 180$Vac	All models	$P_{O,max}$	-	-	1000	W
$V_{IN,AC} > 180$Vac	All models	$P_{O,max}$	-	-	1300	W
Isolation Voltage						
Input to outputs	All models		-	-	4242	Vdc
Input to safety ground	All models		-	-	2121	Vdc
Ambient Operating Temperature[1]	All models	T_A	0	-	55	°C
Storage Temperature	All models	T_{STG}	-40	-	85	°C
Humidity (non-condensing)						
Operating	All models		5	-	90	%
Non-operating	All models		5	-	95	%
Accoustic[2]	All models		-	-	66	dBA
Altitude[3]						
Operating	All models		-	-	3050	Meters
MTBF[4]	All models		250	-	-	KHours
Operating Life[5]	All models		-	5	-	Years
Fan L10 Life[6]	All models		75	-	-	KHours

Note 1 - The PSU must operate to an altitude of 5000 meters above sea level, the maximum operating temperature(55°C) is to be de-rated by 1°C per 200m above 2000m.
Note 2 - 50% load at 40°C, fan noise as measured from one meter distance from the power supply can meet the limits defined 66dBA.
Note 3 - Safety creepage/clearance rated for 5,000m altitude for CCC.
Note 4 - It is calculated under 40°C ambient temperature and 100% $I_{O,max}$.
Note 5 - It is calculated under 50°C ambient temperature and 100% $I_{O,max}$.
Note 6 - It is calculated under 35°C ambient temperature.

ELECTRICAL SPECIFICATIONS

Input Specifications

Table 2. Input Specifications

Parameter	Condition	Symbol	Min	Typ	Max	Unit
Operating Input Voltage, AC	All	$V_{IN,AC}$	90	115/230	264	Vac
Operating Input Voltage, DC	All	$V_{IN,DC}$	180	240	300	Vdc
Input AC Frequency	All	$f_{IN,AC}$	47	50/60	63	Hz
Maximum Input Current ($I_O = I_{O,max}$, $I_{SB} = I_{SB,max}$)	$V_{IN,AC}$ = 100Vac	$I_{IN,max}$	-	-	12.5	A
	$V_{IN,AC}$ = 180Vac		-	-	8.5	A
No Load Input Current (V_O = On, I_O = 0A, I_{SB} = 0A)	All	$I_{IN,no-load}$	-	-	250	mA
No Load Input Power (V_O = On, I_O = 0A, I_{SB} = 0A)	All	$P_{IN,no-load}$	-	-	4.5	W
Standby Input Current (V_O = Off, I_{SB} = 0A)	All	$I_{IN,standby}$	-	-	250	mA
Standby Input Power (V_O = Off, I_{SB} = 0A)	All	$P_{IN,standby}$	-	-	5.5	W
Input iTHD[1]	$V_{IN,AC}$ = 230Vac 5 < I_O ≤ 10%$I_{O,max}$ 10 < I_O ≤ 20%$I_{O,max}$ I_O ≥ 20%$I_{O,max}$ I_O ≥ 40%$I_{O,max}$ I_O ≥ 50%$I_{O,max}$ I_O = 100%$I_{O,max}$	iTHD	- - - - - -	- - - - - -	25 15 10 8 5 4	%
Power Factor	$V_{IN,AC}$ = 230Vac I_O = 10%$I_{O,max}$ I_O = 20%$I_{O,max}$ I_O = 50%$I_{O,max}$ I_O = 100%$I_{O,max}$	PF	0.90 0.96 0.98 0.99	- - - -	- - - -	
Startup Surge Current (Inrush)[2] @ 25°C	$V_{IN,AC}$ = 264Vac	$I_{IN,surge}$	-	-	25	Apk
Input Fuse	Internal, L 5x20mm, Quick Acting 20A, 500Vdc		-	-	20	A
Leakage Current to Earth Ground	$V_{IN,AC}$ = 264Vac $f_{IN,AC}$ = 50Hz		-	-	1.75	mA
Turn-on Voltage	AC Low Line	$V_{IN,AC}$	79	-	89	Vac
Minimum of 5V hysteresis	DC Input	$V_{IN,DC}$	171	175	179	Vdc
Turn-off Voltage	AC Low Line	$V_{IN,AC}$	75	-	84	Vac
Minimum of 5V hysteresis	DC Input	$V_{IN,DC}$	164	169	174	Vdc

Note 1 - Individual harmonic contribution, up to 44th harmonic, should comply with IEC61000-3-2 starting at 10% load.
Note 2 - The input peak current will not exceed 35A peak when the power supply input is cycled between on and off states at 240Vac, where the off state is not more than one full AC cycle. The AC input can return at any phase. Any peak beyond 35A must not exceed 65A and have a duration of less than 200uS.

ELECTRICAL SPECIFICATIONS

Input Specifications

Table 2. Input Specifications con't

Parameter	Condition	Symbol	Min	Typ	Max	Unit
Operating Efficiency[1] @ 25°C	$V_{IN,AC}$ = 230Vac $f_{in,AC}$ = 50Hz $I_O = 10\%I_{O,max}$ $I_O = 20\%I_{O,max}$ $I_O = 50\%I_{O,max}$ $I_O = 100\%I_{O,max}$	η	 88 91 94 91	 - - - -	 - - - -	 % % % %
System Stability Gain Margin			-6	-	-	dB

Note 1 - 90% when fan power is excluded.

ELECTRICAL SPECIFICATIONS

Output Specifications

Table 3. Output Specifications

Parameter	Condition	Symbol	Min	Typ	Max	Unit
Factory Set Voltage	All	V_O	12.0	12.2	12.5	Vdc
		V_{SB}	11.8	12.0	12.6	
Output Regulation	Static load Dynamic load	V_O	11.8 11.6	- -	12.6 12.8	Vdc
	All	V_{SB}	11.4	-	12.6	
Output Ripple, pk-pk	Measure with a 0.1µF ceramic capacitor in parallel with a 10µF tantalum capacitor, 10 to 20MHz bandwidth	V_O	-	-	120	mV_{PK-PK}
		V_{SB}	-	-	120	
Output Current	High line Low line	I_O	1 1	- -	108.3 83.33	A
	All	I_{SB}	0	-	3	
Output Current Share Accuracy	20% to 100% I_O 10% to 20% I_O		- -	- -	5 10	$\%I_O$
Output Voltage Minimum Current Share Loading	All	$\%I_O$	10	-	-	%
Number of Parallel Units	Main output current share connected		-	-	4	Units
Load Capacitance	Main output start up, stability, cold redundancy and dynamic load	C_O	2200	-	25000	uF
	Standby output start up	C_{SB}	100	-	3100	uF
V_O Dynamic Response[1] Peak Deviation	60% load change, slew rate = 0.5A/us	V_O	11.6	-	12.8	Vdc
	1A load change, slew rate = 0.5A/us	V_{SB}	11.4	-	12.6	Vdc

Note 1 - The minimum load is 1A, the capacitive load for the main output is 2200uF, the capacitive load for standby output is 1000uF.

ELECTRICAL SPECIFICATIONS

System Timing Specifications

Table 4. System Timing Specifications

Label	Parameter	Min	Typ	Max	Unit
T1	Delay from AC being applied to V_{SB} being within regulation.	-	-	1500	mSec
T2	Delay from AC being applied to all output voltages being within regulation.	-	-	3000	mSec
T3	Output voltage rise time for 12V from 10% to within regulation limits.	-	-	25	mSec
T4	Standby voltage rise time from 10% to within regulation limits.	-	-	70	mSec
T5	Delay from output voltages within regulation limits to PWOK asserted high at turn on.	100	-	500	mSec
T6	Delay from loss of AC to de-assertion of PWOK.	10	-	-	mSec
T7	Delay from PWOK de-asserted to output voltages dropping out of regulation limits.	1	-	-	mSec
T8	Hold up time - time output voltages stay within regulation after the loss of AC.	11	-	-	mSec
T9	Delay from standby voltage in regulation to output voltage in regulation at AC turn on.	50	-	1000	mSec
T10	Duration of PWOK being in the de-asserted state during an off/on cycle using AC or the PSON signal.	100	-	-	mSec
T11	Delay from PSON active to output voltages within regulation limits.	5	-	400	mSec
T12	Delay from PSON deactive to PWOK de-asserted low.	–	-	5	mSec
T13	Hold up time - time standby voltages stay within regulation after the loss of AC.	70	-	-	mSec
T14	Delay from PSON de-asserted to power supply turning off.	-	-	5	mSec

ELECTRICAL SPECIFICATIONS

System Timing Diagram

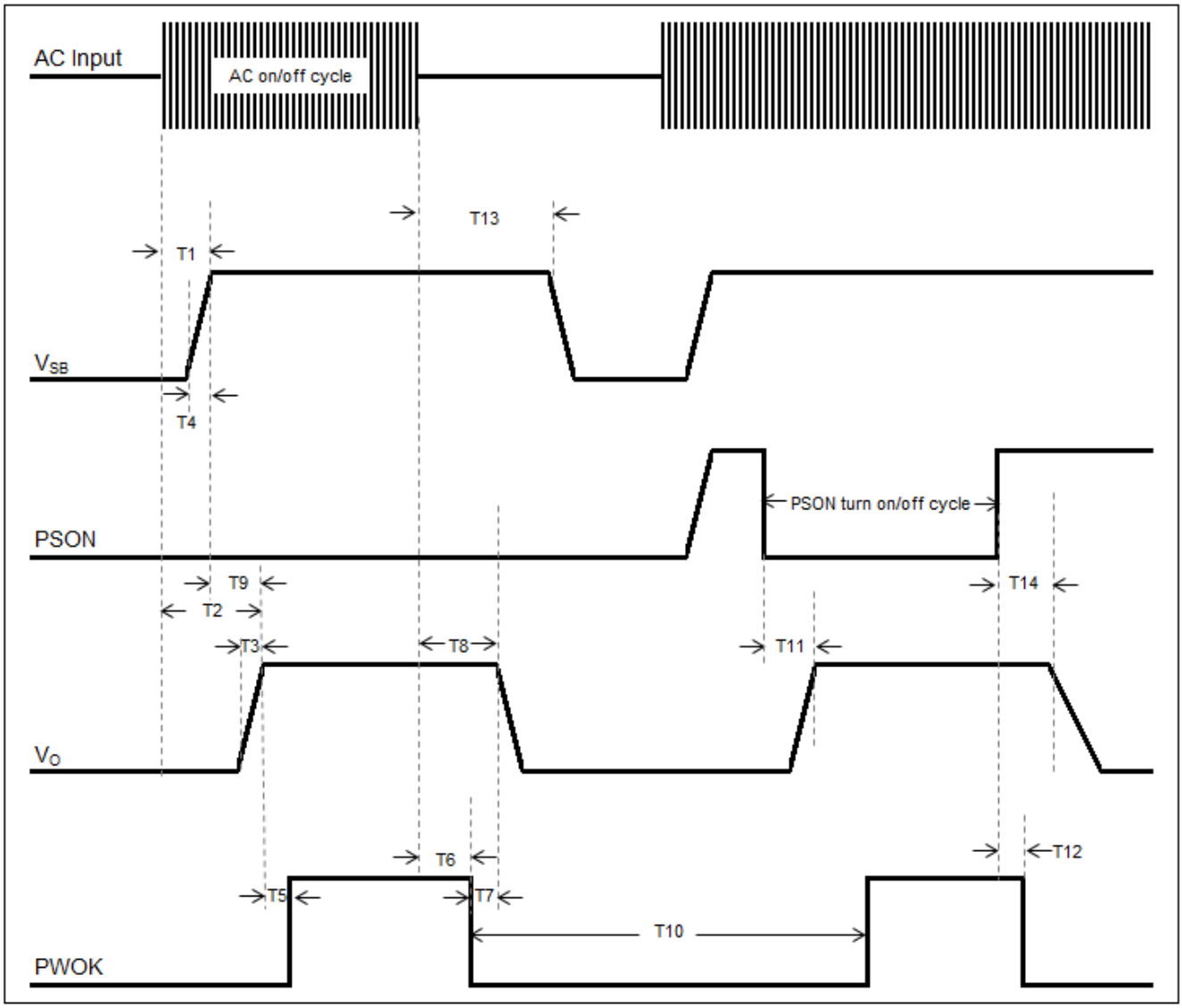

ELECTRICAL SPECIFICATIONS

CSU1300AP-3 Performance Curves

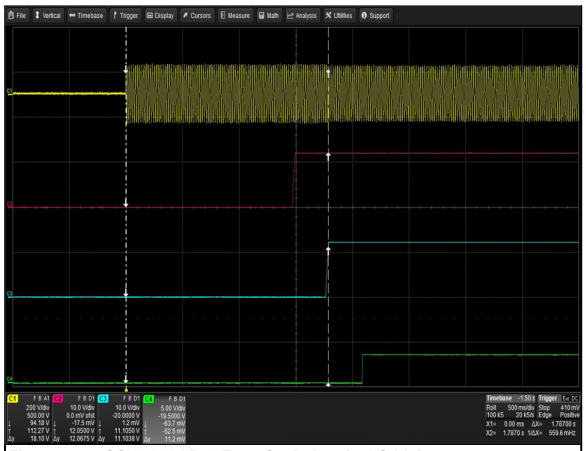

Figure 1: CSU1300AP-3 Turn-On Delay via AC Mains
Vin = 90Vac Load: I_O = 83.33A I_{SB} = 3A
Ch 1: AC Mains Ch 2: V_{SB} Ch 3: V_O Ch 4: PWOK

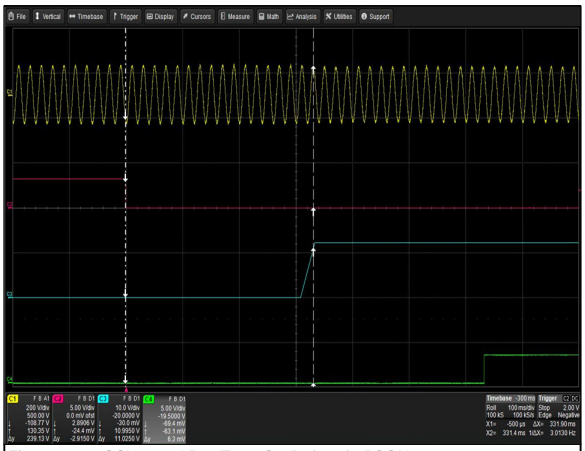

Figure 2: CSU1300AP-3 Turn-On Delay via PSON
Vin = 90Vac Load: I_O = 83.33A I_{SB} = 3A
Ch 1: AC Mains Ch 2: PSON Ch 3: V_O Ch 4: PWOK

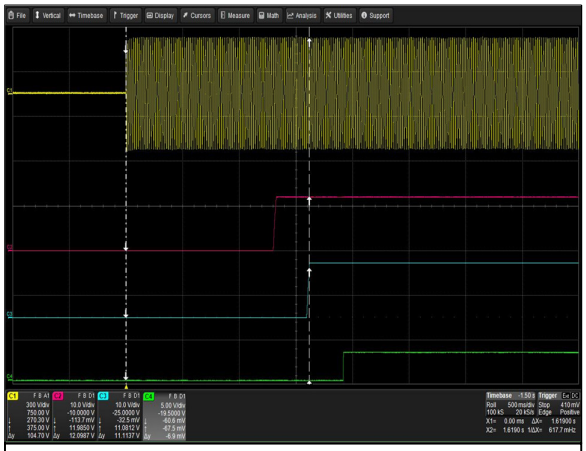

Figure 3: CSU1300AP-3 Turn-On Delay via AC Mains
Vin = 264Vac Load: I_O = 108.3A I_{SB} = 3A
Ch 1: AC Mains Ch 2: V_{SB} Ch 3: V_O Ch 4: PWOK

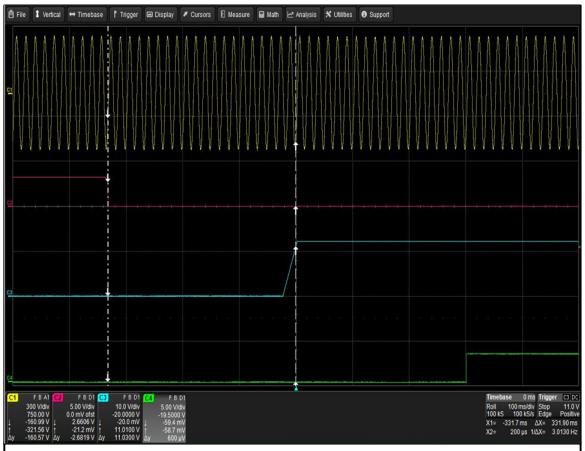

Figure 4: CSU1300AP-3 Turn-On Delay via PSON
Vin = 264Vac Load: I_O = 108.3A I_{SB} = 3A
Ch 1: AC Mains Ch 2: PSON Ch 3: V_O Ch 4: PWOK

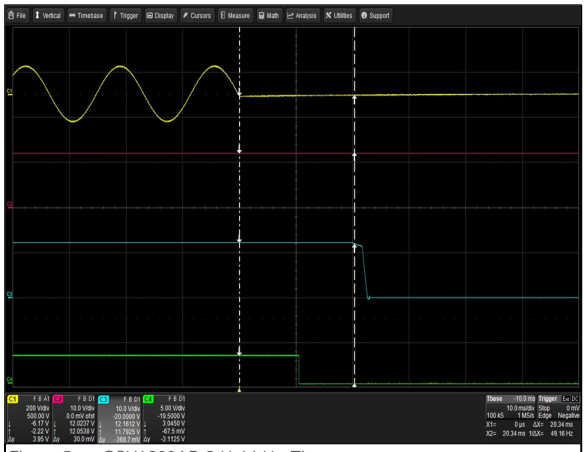

Figure 5: CSU1300AP-3 Hold-Up Time
Vin = 90Vac Load: Io = 83.33A I_{SB} = 3A
Ch 1: AC Mains Ch 2: V_{SB} Ch 3: V_O Ch 4: PWOK

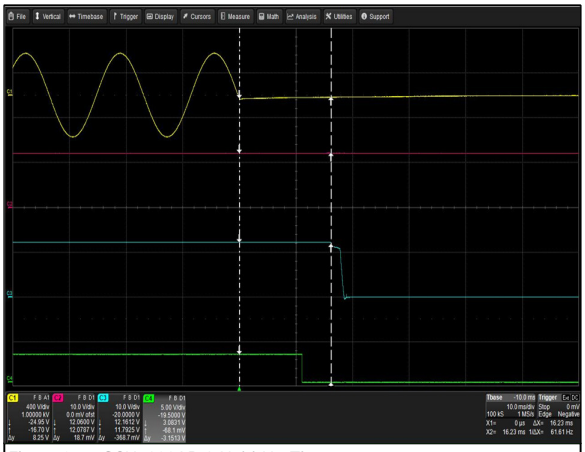

Figure 6: CSU1300AP-3 Hold-Up Time
Vin = 264Vac Load: Io = 108.3A I_{SB} = 3A
Ch 1: AC Mains Ch 2: V_{SB} Ch 3: V_O Ch 4: PWOK

ELECTRICAL SPECIFICATIONS

CSU1300AP-3 Performance Curves

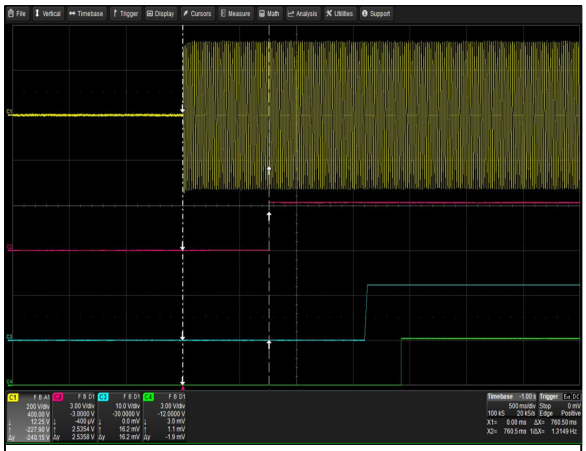

Figure 7: CSU1300AP-3 VIN_GOOD Assert Characteristic
Vin = 230Vac Load: Io = 108.3A I_{SB} = 3A
Ch 1: AC Mains Ch 2: VIN_GOOD Ch 3: V_O Ch 4: PWOK

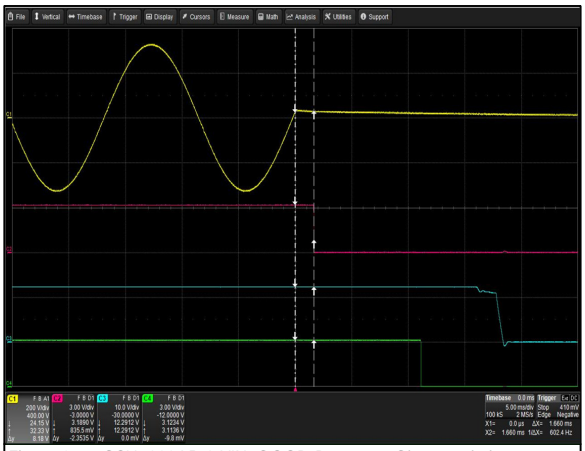

Figure 8: CSU1300AP-3 VIN_GOOD De-assert Characteristic
Vin = 230Vac Load: Io = 108.3A I_{SB} = 3A
Ch 1: AC Mains Ch 2: VIN_GOOD Ch 3: V_O Ch 4: PWOK

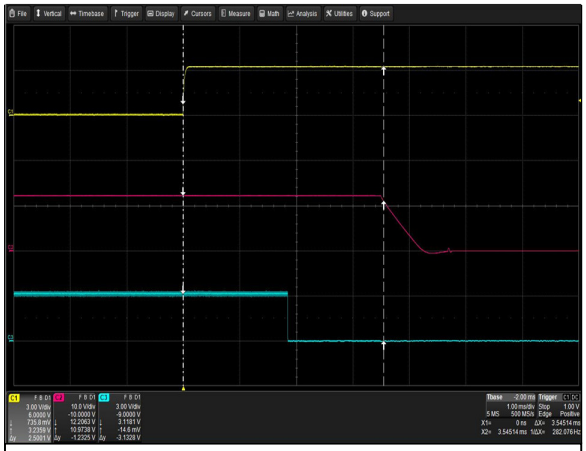

Figure 9: CSU1300AP-3 Turn Off Characteristic via PSON
Load: Io = 108.3A I_{SB} = 3A
Ch 1: PSON Ch 2: V_O Ch 3: PWOK

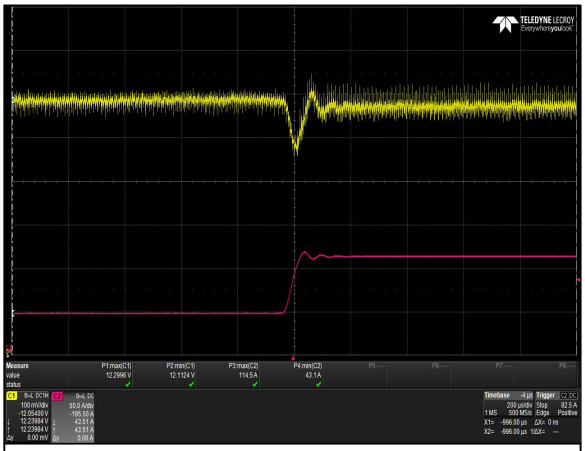

Figure 10: CSU1300AP-3 Transient Response - V_O Deviation
40% to 100% load change 0.5A/uS slew rate Vin = 230Vac
Ch 1: V_O Ch 2: I_O

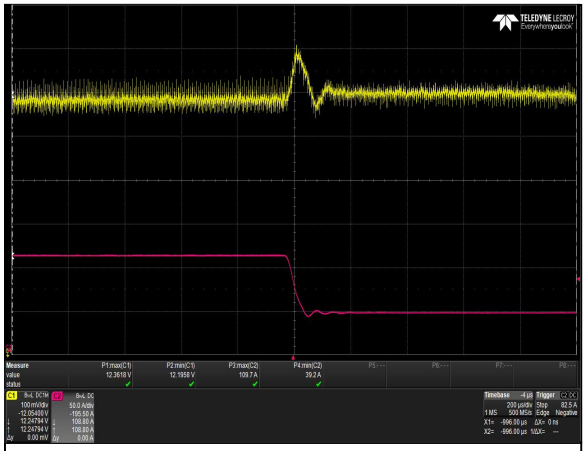

Figure 11: CSU1300AP-3 Transient Response - V_O Deviation
100% to 40% load change 0.5A/uS slew rate Vin = 230Vac
Ch 1: V_O Ch 2: I_O

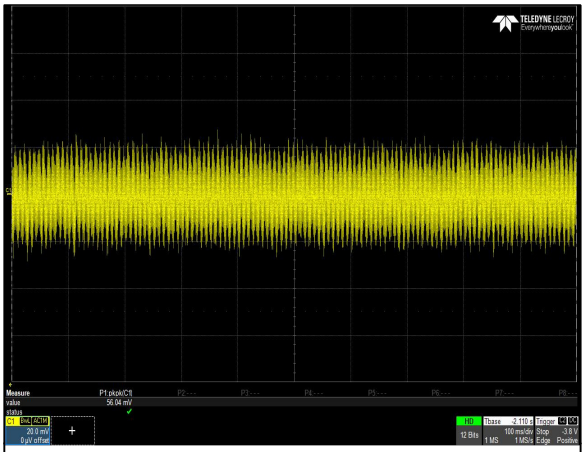

Figure 12: CSU1300AP-3 Ripple and Noise Measurement
Vin = 115Vac Load: Io = 83.33A I_{SB} = 3A
Ch 1: V_O

ELECTRICAL SPECIFICATIONS

CSU1300AP-3 Performance Curves

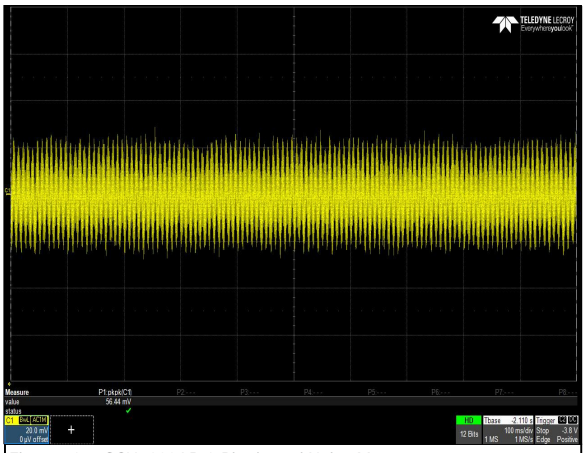

Figure 13: CSU1300AP-3 Ripple and Noise Measurement
Vin = 230Vac Load: Io = 108.3A I_{SB} = 3A
Ch 1: V_O

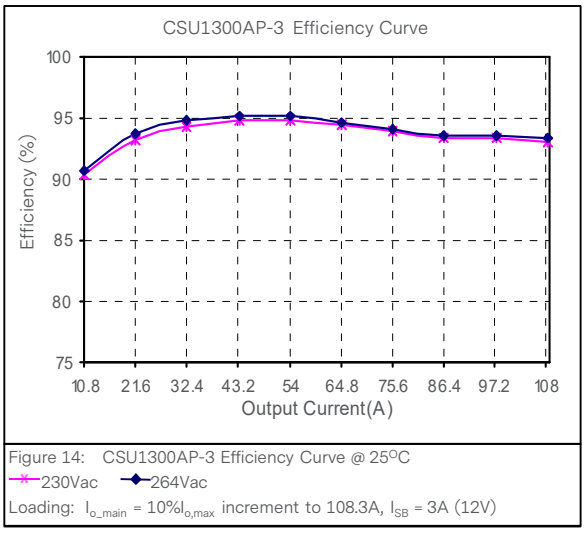

Figure 14: CSU1300AP-3 Efficiency Curve @ 25°C
230Vac 264Vac
Loading: I_{o_main} = 10%$I_{o,max}$ increment to 108.3A, I_{SB} = 3A (12V)

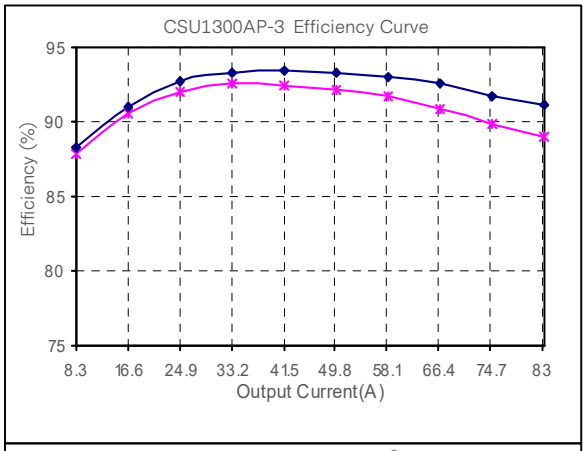

Figure 15: CSU1300AP-3 Efficiency Curve @ 25°C
90Vac 115Vac
Loading: I_{o_main} = 10%$I_{o,max}$ increment to 83.33A, I_{SB} = 3A (12V)

ELECTRICAL SPECIFICATIONS

Protection Function Specifications

Input Fuse

CSU1300AP series power supply is equipped with an internal non user serviceable 20A Fast Acting 500Vdc fuse for fault protection on L line input.

Input Over Voltage Protection

The input is a signal phase AC with below characteristics, the power supply can meet all DC output specifications for any input voltage specified in the table below. When the power supply detects input over voltage, it would shut down the main output, but the V_{SB} should keep on. If the input voltage continues to increase, the power supply should be subjected to a permanent damage and shut off V_{SB}.

Parameter	Min	Nom	Max	Unit
Input Overvoltage	268	272	/	Vac
Input Overvoltage Recovery	/	266	270	Vac
Input Overvoltage	310	/	320	Vdc
Input Overvoltage Recovery	300	/	310	Vdc

Over Voltage Protection (OVP)

The power supply latches off during output overvoltage with the AC line recycled or PSON to reset the latch. +12V V_{SB} overvoltage protection is also latch mode.

Parameter	Min	Nom	Max	Unit
Main Output Overvoltage	13.5	/	15	V
Standby Output Overvoltage	13.5	/	15	V

Over Temperature Protection (OTP)

The power supply is internally protected against over temperature conditions. When the OTP limit is reached, all outputs, except standby, will shutdown and remain off until the over temperature condition no longer exists. The OTP circuit have a sufficient hysteresis so that the power supply can not oscillate on and off due to temperature recovering condition. The OTP trip level has a minimum of 4°C of ambient temperature margin.

Over Current Protection (OCP)

CSU1300AP series includes internal current limit circuitry to prevent damage in the event of overload or short circuit. It has over current protection (OCP), over current warning (OCW), and over power protection (OPP) limits as defined in table below. When OCP trips, it will shutdown and latch off the PSU. The latched PSU is cleared by an AC power cycle or PSON recycle. The power supply can not be damaged from repeated power cycling in this condition. 12V_{SB} is auto-recovered after removing OCP limit.

ELECTRICAL SPECIFICATIONS

The Vo OCP limit at different loading.

12V OCP/OPP	Min Load	Normal Load	Max Load	SMB Alert	Fault Delay Time
Overcurrent Warning	110%	115%	120%	≥20.1Sec	NA
Overcurrent Protection	120%	130%	140%	10-20mSec	≥10mSec
Over power Protection	140%	150%	160%	<20uSec	≥100uSec

The $12V_{SB}$ OCP limit at different loading.

12VSB	Min	Nom	Max	Unit
OCP	4.0	/	5.0	A

MECHANICAL SPECIFICATIONS

Mechanical Outlines (unit: mm)

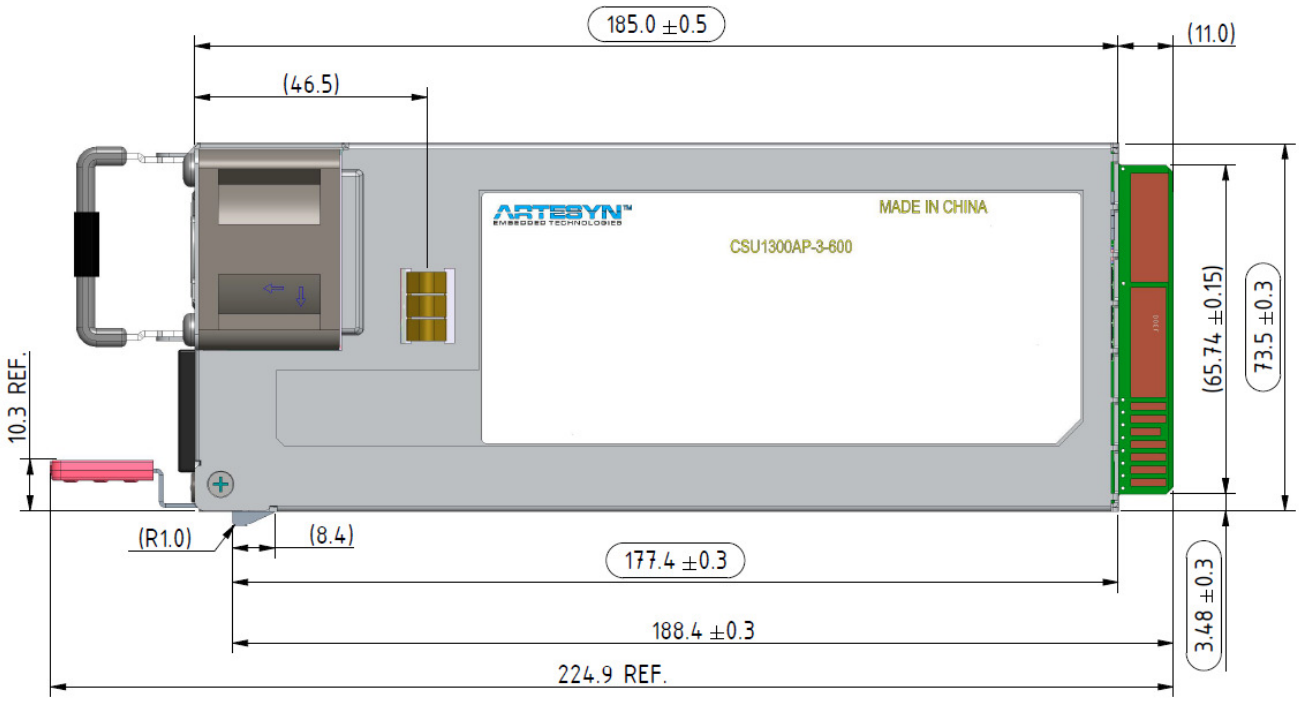

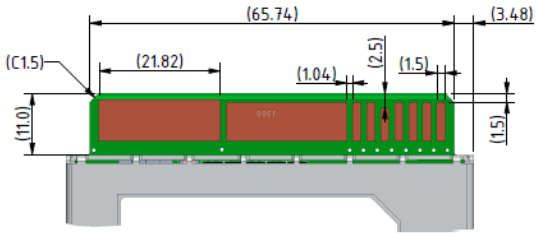

TOP

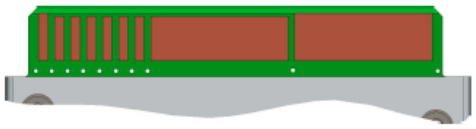

BOTTOM



MECHANICAL SPECIFICATIONS

Mechanical Outlines (unit: mm)

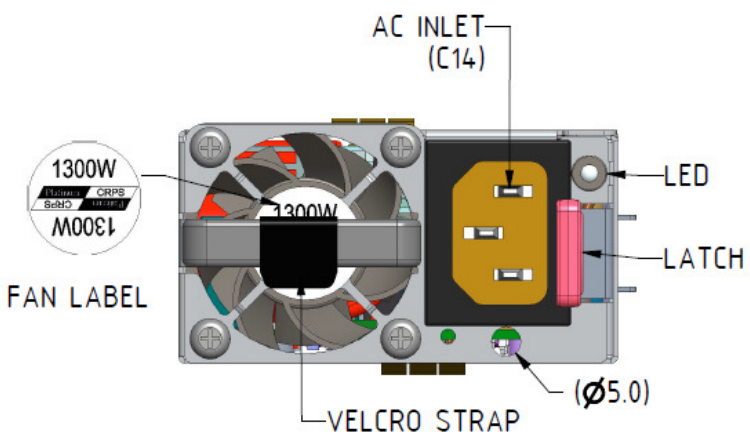

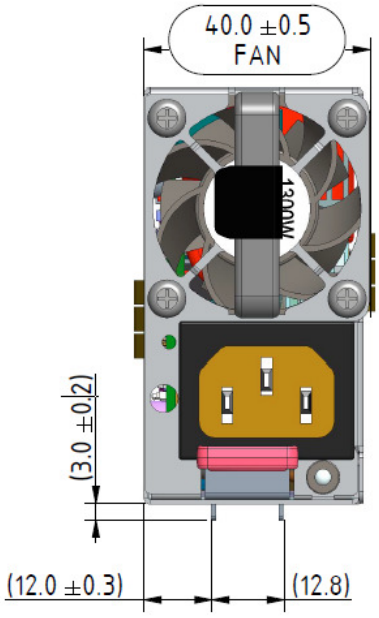

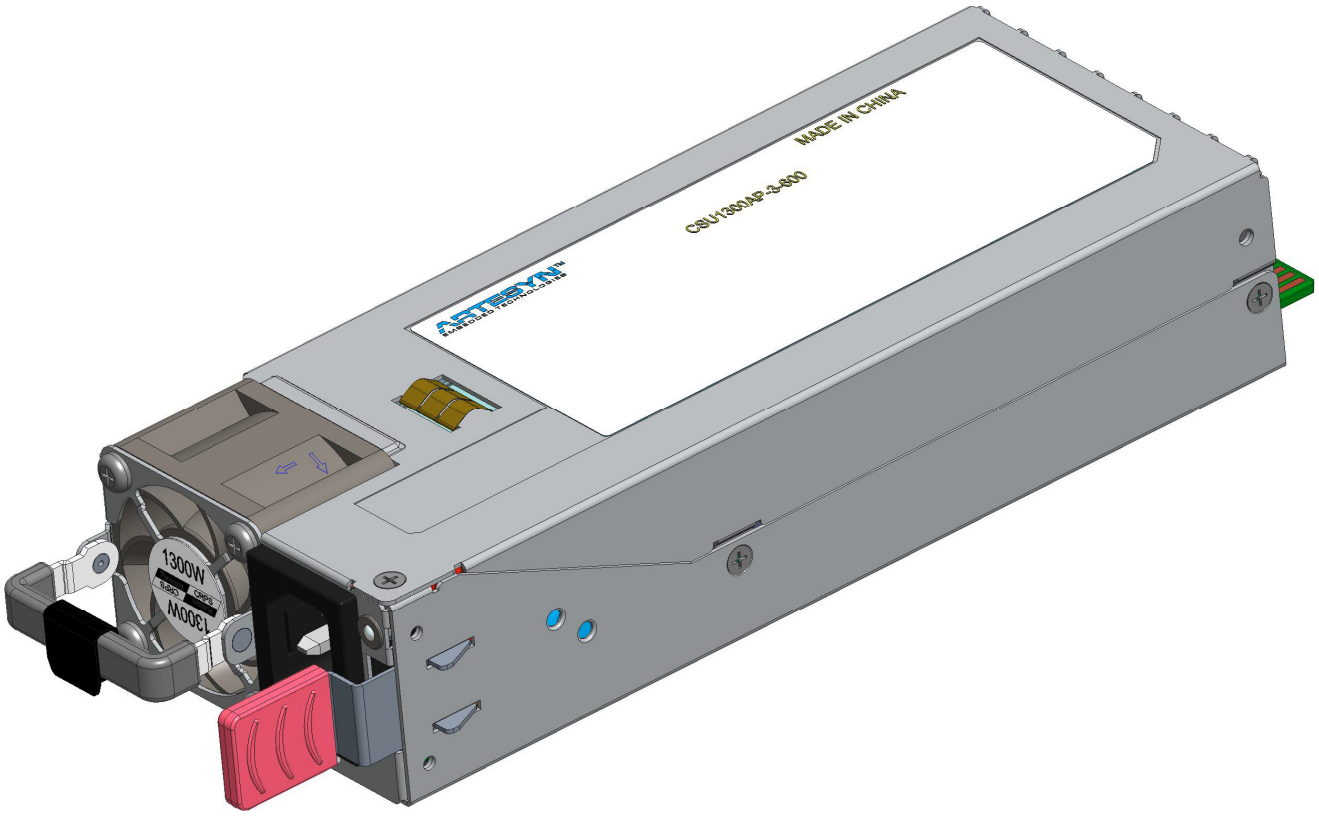

MECHANICAL SPECIFICATIONS

Connector Definitions

AC Input Connector

Pin 1 – Line

Pin 2 – Neutral

Pin 3 – Earth Ground

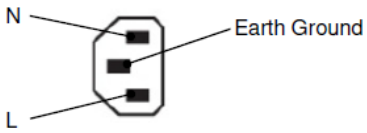

Output Connector - Power Blades

A1-A9	–	Main Output Return
A10-A18	–	Main Output (V_O)
B1-B9	–	Main Output Return
B10-B18	–	Main Output (V_O)

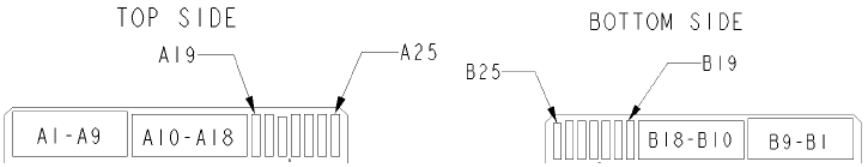

View from power supply output connector end

Output Connector - Control Signals

A19 – SDA

A20 – SCL

A21 – PSON

A22 – SMB Alert

A23 – $-V_{SENSE}$

A24 – $+V_{SENSE}$

A25 – PWOK

B19 – A0 (SMBus Address)

B20 – A1 (SMBus Address)

B21 – $12V_{SB}$

B22 – CR_BUS

B23 – 12V Load Share

B24 – Present

B25 – VIN_GOOD

MECHANICAL SPECIFICATIONS

Power / Signal Mating Connectors and Pin Types

Table 5. Mating Connectors for CSU800AP-3-600		
Reference	**On Power Supply**	**Mating Connector or Equivalent**
AC Input Connector	IEC320-C14	IEC320-C13
Output Connector	Card-edge	Right Angle 2x25 pin configuration of the FCI power card connector 10035388-102LF or any approved equivalent Vertical FCI Amphenol HPG36P14SVP011T P2P FCI Amphenol 10147875-111LF

MECHANICAL SPECIFICATIONS

LED Indicator Definitions

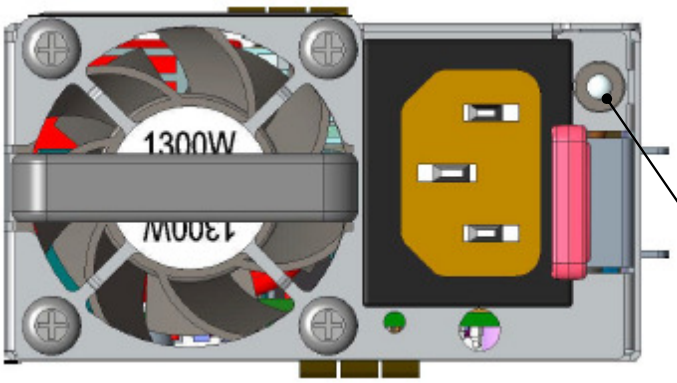

One bi-color (green/amber) LED at the power supply front provides the status signal. The status LED conditions are shown on the following table.

Conditions	LED Status
Normal work.	Green
No AC power to all power supplies.	Off
PSU standby state AC present / Only $12V_{SB}$ on (PS off) / Cold standby state or always standby state as defined in the Cold Redundancy section.	1Hz Blink Green
AC cord unplugged with a second power supply in parallel still with AC input power.	Amber
Power supply critical event causing a shutdown. (Failure, over current, short circuit, over voltage, fan failure, over temperature)	Amber
Power supply warning events where the power supply continues to operate. (High temp, high power, high current, slow fan)	1Hz Blink Amber
Power supply firmware updating.	2Hz Blink Green

MECHANICAL SPECIFICATIONS

Weight

The CSU1300AP series power supply weight is 1000g/2.205lbs.

ENVIRONMENTAL SPECIFICATIONS

EMC Immunity

CSU1300AP series power supply is designed to meet the following EMC immunity specifications.

Table 6. Environmental Specifications

Document	Description
EN55032	Conducted and Radiated EMI Limits
EN61000-3-2:2014	Harmonics
EN61000-3-3:2013	Voltage Fluctuations
EN61000-4-2	Electromagnetic Compatibility (EMC) - Testing and measurement techniques - Electrostatic discharge immunity test: 15KV air, 8KV contact discharge. Performance - Criteria B
EN61000-4-3	Electromagnetic Compatibility (EMC) - Testing and measurement techniques - Radiated, radio-frequency, electromagnetic field immunity test: 10V/m. Performance - Criteria A
EN61000-4-4	Electromagnetic Compatibility (EMC) - Testing and measurement techniques - Electrical fast transient/burst immunity test: +/-2KV for AC power port. Performance - Criteria B
EN61000-4-5	Electromagnetic Compatibility (EMC) - Testing and measurement techniques - Surge test: +/-2KV common mode and +/-1KV differential mode for AC ports. Performance - Criteria B
EN61000-4-6	Electromagnetic Compatibility (EMC) - Testing and measurement techniques - Conducted Immunity 10Vrms. Performance - Criteria A.
EN61000-4-11	Electromagnetic Compatibility (EMC) - Testing and measurement techniques - Voltage dips and interruptions: Criteria B: >95% reduction for 10ms; Criteria C: 30% reduction for 500mS, or Criteria C (self-recoverable only) >95% reduction for 5000mS.
EN55035/EN55024	Electromagnetic Compatibility (EMC) - Testing and measurement techniques - Power frequency magnetic field immunity. Performance - Criteria A.

Notes: Performance Criteria as defined by EN55024.

Performance Criteria A: The apparatus shall continue to operate as intended after the test. No degradation of performance or loss of function is allowed below specified performance level during intended use of operation.

Performance Criteria B: The apparatus shall continue to operate as intended after the test. No degradation of performance or loss of function is allowed below specified performance level during intended use of operation. Degradation of performance is allowed during the exposure to an electromagnetic phenomenon but no change of actual operating state is allowed.

Performance Criteria C: Temporary loss of function is allowed, provided the function is self-recoverable or can be restored by the operation of the controls.

ENVIRONMENTAL SPECIFICATIONS

Safety Certifications

The CSU1300AP series power supply is intended for inclusion in other equipment and the installer must ensure that it is in compliance with all the requirements of the end application. This product is only for inclusion by professional installers within other equipment and must not be operated as a stand alone product.

Table 7. Safety Certifications for CSU1300AP Series Power Supply

Standard	Agency	Description
UL62368-1, CAN/CSA C22.2 No.62368-1	UL + CUL	US and Canada Requirements
IEC60950, IEC/EN62368-1	CE	European Requirements
IEC62368-1:2014	TUV-SUD CB CERT	International Electrotechnical Commission
CHINA CCC Approval		China Requirements
KC		Korea Certification
EAC		Russia Requirements
BIS		India Requirements
FCC		EMC
BSMI		Taiwan Requirements
CE		LVD, ROHS, EMC
UKCA Mark		UKCA Requirement

ENVIRONMENTAL SPECIFICATIONS

EMI Emissions

The CSU1300AP series power supply has been designed to comply with the Class A limits of EMI requirements of FCC CFR 47 Part 15 Subpart B and EN55032 for emissions and relevant sections of EN55032: 2015 for immunity. The unit is tested at 1300W using resistive load with cooling fan.

Conducted Emissions

The applicable standard for conducted emissions is EN55032 (FCC Part 15). Conducted noise can appear as both differential mode and common mode noise currents. Differential mode noise is measured between the two input lines, with the major components occurring at the supply fundamental switching frequency and its harmonics. Common mode noise, a contributor to both radiated emissions and input conducted emissions, is measured between the input lines and system ground and can be broadband in nature.

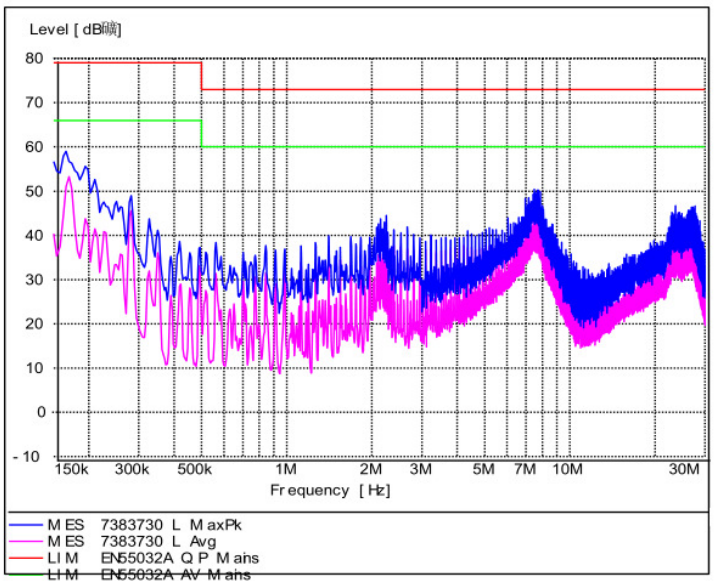

The CSU1300AP series power supply has internal EMI filters to ensure the convertor's conducted EMI levels comply with EN55032 (FCC Part 15) Class A limits. The EMI measurements are performed with resistive loads at maximum rated loading.

Sample of EN55032 Conducted EMI Measurement at 110Vac Input

Note: Red Line refers to Artesyn Quasi Peak margin, which is 6dB below the CISPR international limit. Green Line refers to the Artesyn Average margin, which is 6dB below the CISPR international limit.

Conducted EMI emissions specifications of the CSU1300AP series power supply:

Parameter	Model	Symbol	Min	Typ	Max	Unit
FCC Part 15, class A	All	Margin	6	-	-	dB
CISPR 32 (EN55032), class A	All	Margin	6	-	-	dB

ENVIRONMENTAL SPECIFICATIONS

Radiated Emissions

Unlike conducted EMI, radiated EMI performance in a system environment may differ drastically from that in a stand-alone power supply. The shielding effect provided by the system enclosure may bring the EMI level from Class A to Class B. It is thus recommended that radiated EMI be evaluated in a system environment. The applicable standard is EN55032 Class A (FCC Part 15). Testing AC-DC converters as a stand-alone component to the exact requirements of EN55032 can be difficult because the standard calls for 1m lead to be attached to the input and outputs and aligned such as to maximize the disturbance. In such a set-up, it is possible to form a perfect dipole antenna that very few AC-DC converters could pass. However, the standard also states that an attempt will be made to maximize the disturbance consistent with the typical application by varying the configuration of the test sample.

ENVIRONMENTAL SPECIFICATIONS

Operating Temperature

The CSU1300AP series power supply starts and operates with full rated power at an ambient temperature from 0°C to 55 °C. Allowable up to 55°C at de-rated power.

Forced Air Cooling

The CSU1300AP series power supply includes internal cooling fans as part of the power supply assembly to provide forced air-cooling to maintain and control temperature of devices and ambient temperature in the power supply to appropriate levels. The standard direction of airflow is from the DC connector end to the AC connector end of the power supply.

ENVIRONMENTAL SPECIFICATIONS

Storage and Shipping Temperature

The CSU1300AP series power supply can be stored or shipped at temperatures between -40°C to +85°C and relative humidity from 5% to 95% non-condensing.

Altitude

The CSU1300AP series power supply can operate within specifications at altitudes up to 5,000 meters above sea level.

Humidity

The CSU1300AP series power supply can operate within specifications when subjected to a relative humidity from 5% to 90% non-condensing. The power supply can be stored in a relative humidity from 5% to 95% non-condensing.

Vibration

The CSU1300AP series power supply will pass the following vibration specifications:

Non-Operating Random Vibration

Acceleration	1.87		gRMS
Frequency Range	10 - 500		Hz
Duration	30		Mins/axis
Direction	3 mutually perpendicular axis		
PSD Profile	**FREQ (Hz)**	**SLOPE (db/oct)**	**PSD (g^2/Hz)**
	10 - 200	/	0.01
	500	/	0.003

Operating Random Vibration

Acceleration	2.4		gRMS
Frequency Range	10 - 500		Hz
Duration	30		Mins/axis
Direction	3 mutually perpendicular axis		
PSD Profile	**FREQ (Hz)**	**SLOPE (db/oct)**	**PSD (g^2/Hz)**
	10	/	0.001
	30 - 200	/	0.02
	500	/	0.002

ENVIRONMENTAL SPECIFICATIONS

Shock

The CSU1300AP series power supply will pass the following vibration specifications:

Non-Operating Half-Sine Shock

Acceleration	30	G
Duration	11	mSec
Pulse	Half-Sine	
Number of Shock	3 shocks in each of 6 directions	

Operating Half-Sine Shock

Acceleration	30	G
Duration	11	mSec
Pulse	Half-Sine	
Number of Shock	3 shocks in each of 3 axes	

POWER AND CONTROL SIGNAL DESCRIPTIONS

AC Input Connector

This connector supplies the AC Mains to the CSU1300AP series power supply.

Pin 1 – L
Pin 2 – N
Pin 3 – Earth Ground

Output Connector – Power Blades

These pins provide the main output for the CSU1300AP series power supply. The + Main Output (V_O) and the Main Output Return pins are the positive and negative rails, respectively, of the V_O main output of the CSU1300AP series power supply. The Main Output (V_O) is electrically isolated from the power supply chassis.

A1-A9 – Main Output Return
A10-A18 – Main Output (V_O)
B1-B9 – Main Output Return
B10-B18 – Main Output (V_O)

Output Connector – Control Signals

The CSU1300AP series power supply contains a 14 pins control signal header providing an analogue control interface, standby power and I²C interface signal connections.

SDA, SCL (I²C Data and Clock Signals) - (Pins A19, A20)

Please refer to “Communication Bus Descriptions” section.

PSON - (Pin A21)

This signal input pin controls the normal turn on and off of the main output of the CSU1300AP series power supply. The power supply main output (V_O) will be enabled when this signal is pulled low below 1.0V. The power supply output (except V_{SB} output) will be disabled when this input is driven higher than 2.0V. This signal can be pulled high to 3.46V maximum. The PSU has a 10K internal pull-up resistor, hence no additional pull-up resistor required by system. The source current is 4mA maximum when Vpson is low.

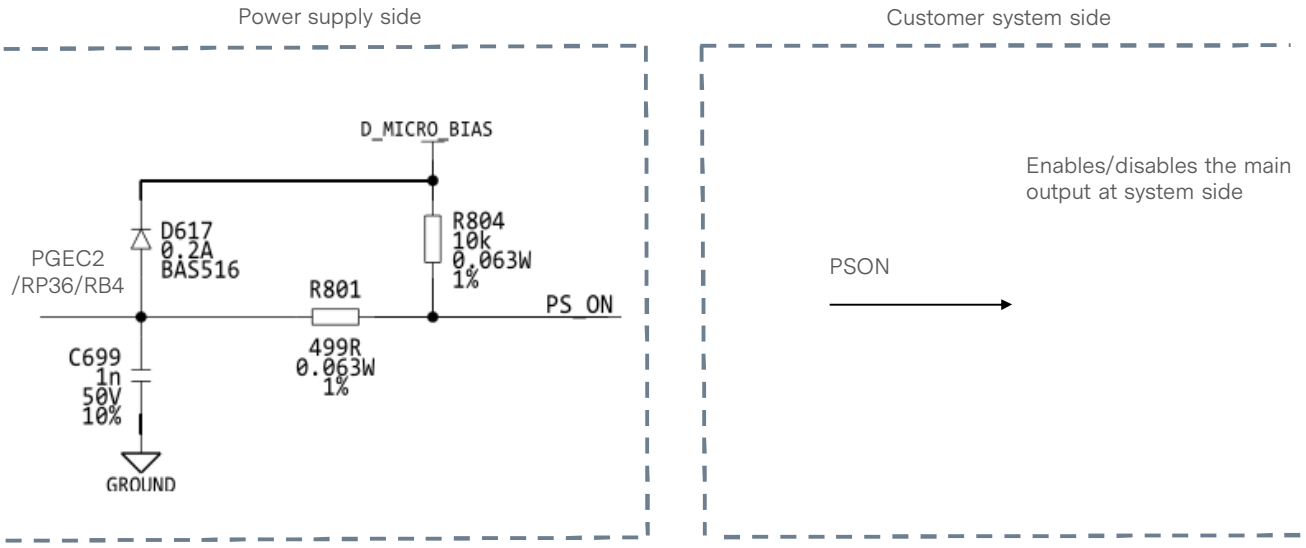

POWER AND CONTROL SIGNAL DESCRIPTIONS

SMBALERT - (Pin A22)

SMBALERT is an active low signal used to send an interrupt to the system that a warning or critical event in the PSU occurred. The pin is normally high. It is asserted (goes low) when a warning or fault occurred, such as OTW/OTP/OCP/OPP/OCW. This signal may also indicate the power supply reaches its end of life or operates in an environment exceeding the specified limits.

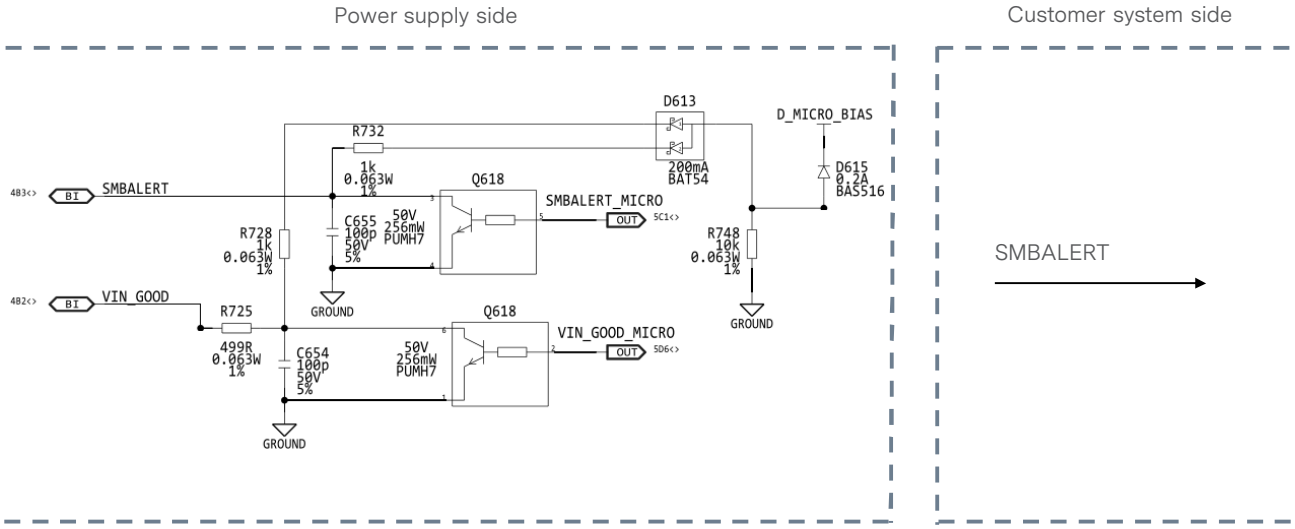

+VSENSE & -VSENSE - (Pins A23, A24)

+VSENSE and -VSENSE are the remote sense signals for 12V main output voltage.

PWOK - (Pin A25)

The PWOK is an output signal driven high above 2.4V by the power supply to indicate that all outputs are valid. If any of the power supply outputs fails below its regulation limits or AC power removed for a time sufficiently long so that power supply operation is no longer guaranteed, this signal will be driven low below 0.4V. The sink current is 400uA maximum when the signal is low and is 2mA maximum when the signal is high. The rise time and fall time of the signal is 100uS maximum.

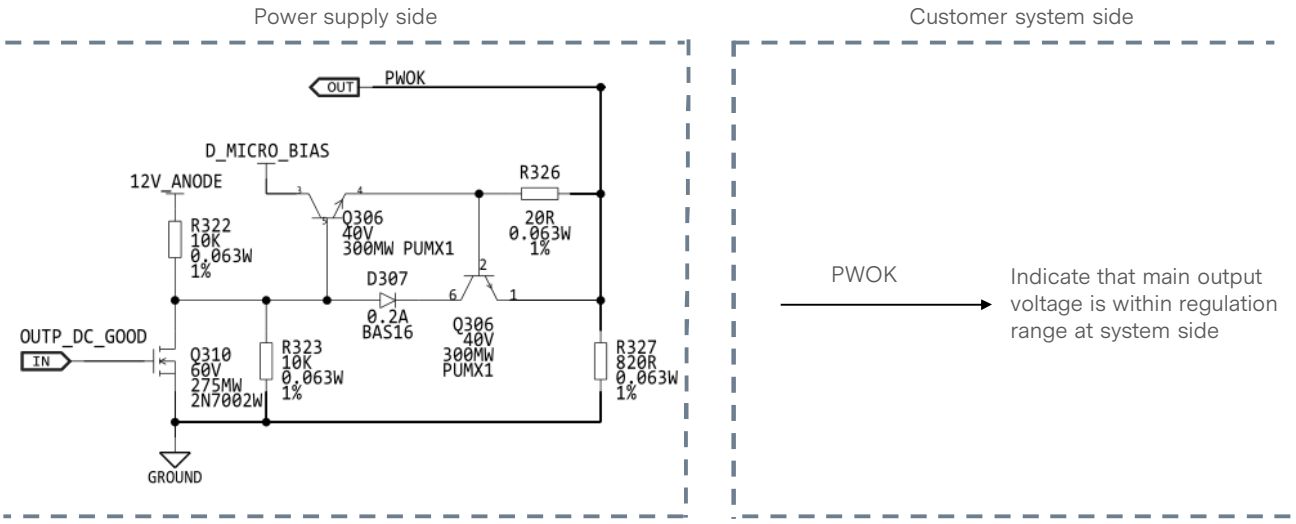

POWER AND CONTROL SIGNAL DESCRIPTIONS

CR_BUS - (Pin B22)

There is an additional signal defined supporting cold redundancy. This is connected to a bus shared between the power supplies and CR_BUS. This is a tri-state output signal of the power supply used to communicate a fault or Vout under-voltage level has occurred in one of the power supplies. This is used to power on all the power supplies in the system via the CR_BUS. When the signal is pulled high, it allows all power supplies in cold standby mode to go into cold standby state when the load share voltage is below the VCR_ON level. When the signal is left open on all power supplies, it forces all cold standby power supplies into the ON. The cold redundancy section showing the logic state of the CR_BUS signal depending upon the programmed configuration of the power supply in D0h, the operating state of the power supply, and the power supply fault status.

Refer cold redundancy part for details.

12V Load Share - (Pin B23)

12V load share is a single wire bus signal used to help equalize the output current from two or more power supplies connected to a common load. The current share signal is a DC signal that represents the load current that a power supply is providing. This voltage increases proportionately with the output load and the 12V load share transients during hot insertion or removal would not cause the supply output go out of regulation. The expected voltage levels are stated as below table.

Load (per power supply unit)	Min	Nom	Max	Unit
100%$I_{O,max}$	7.6	8.0	8.4	Vdc
50%$I_{O,max}$	3.8	4.0	4.2	Vdc
25%$I_{O,max}$	1.9	2.0	2.1	Vdc

Present - (Pin B24)

This signal used to indicate to the system that a power supply is inserted in the power bay. This pin is grounded inside the power supply.

- Low - PS is present
- High - PS is removed from system

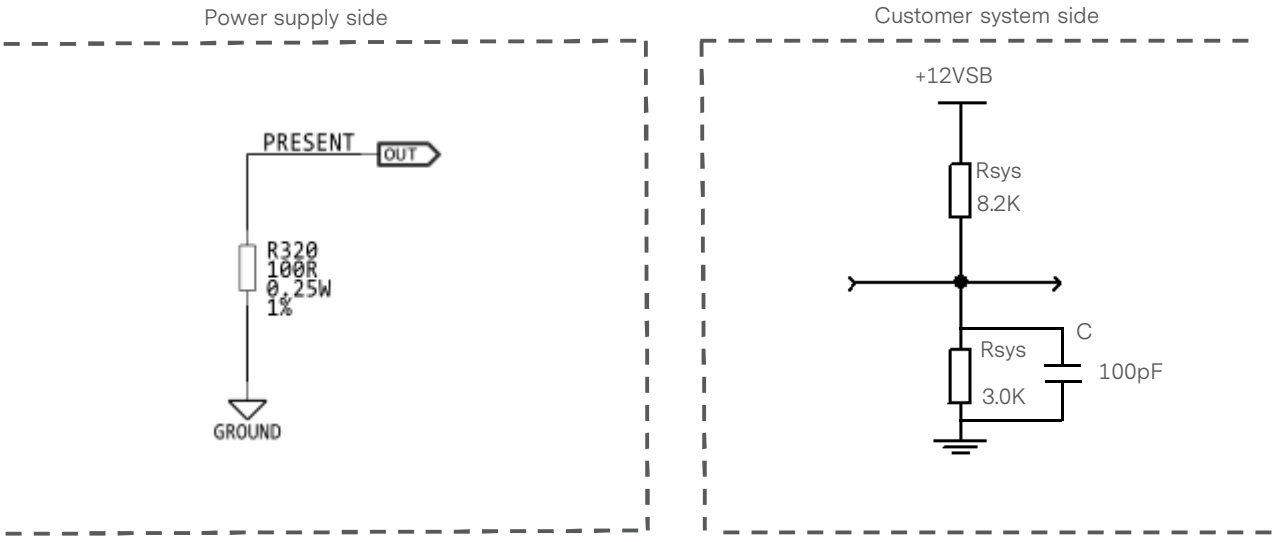

POWER AND CONTROL SIGNAL DESCRIPTIONS

VIN_GOOD - (Pin B25)

VIN_GOOD is a fast-acting signal that indicates the state of the input voltage. During an initial start-up, and at any line condition, VIN_GOOD should assert (GO HIGH) whenever the input voltage is within the operation range.

The VIN_GOOD signal will also assert within 8ms of an input recovery right after a missing cycle.

Signal Type		
VIN_GOOD = high	Input OK	
VIN_GOOD = low	Input not OK	
	MIN	MAX
Logic level low voltage, Isink=400uA	0V	0.4V
Logic level high voltage, Isource=200uA	2.4V	3.46V
Sink current, PWOK = low		400uA
Sink current, PWOK = high		2mA
VIN_GOOD delay: (Input to assertion)		2000mS max
Input loss to VIN_GOOD de-assertion		4mS max

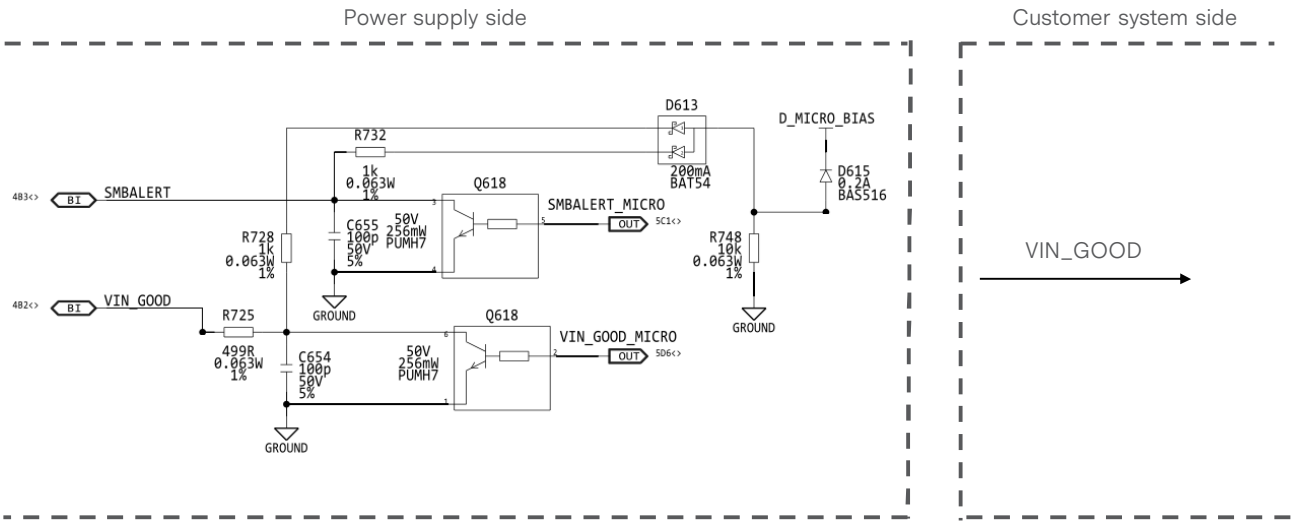

COMMUNICATION BUS DESCRIPTIONS

I²C Bus Signals

CSU1300AP series power supply contains enhanced monitor and control functions implemented via the I²C bus. The CSU1300AP series I²C functionality (PMBus™ and FRU data) can be accessed via the output connector control signals. The communication bus is powered either by the internal 3.3V supply or from an external power source connected to the standby output (i.e. accessing an unpowered power supply as long as the standby output of another power supply connected in parallel is on).

If units are connected in parallel or in redundant mode, the standby outputs must be connected together in the system. Otherwise, the I²C bus will not work properly when a unit is inserted into the system without the DC source connected.

Note: PMBus™ functionality can be accessed only when the PSU is powered-up. Guaranteed communication I²C speed is 100KHz.

A0, A1 (I²C Address Signals) - (Pins B19, B20)

These input pins are the address lines A0 and A1 to indicate the slot position the power supply occupies in the power bay and define the power supply addresses for FRU data and PMBus™ data communication. This allows the system to assign different addresses for each power supply. During I²C communication between the system and power supplies, the system will be the master and the power supplies will be the slave.

SDA, SCL (I²C Data and Clock Signals) - (Pins A19, A20)

I²C serial data and clock bus - these pins must be pulled-up by a 10Kohm resistor to 3.3V at the system side.

I²C Bus Communication Interval

The interval between two consecutive I²C communications to the power supply must be at least 15ms to ensure proper monitoring functionality.

I²C Bus Signal Integrity

The noise on the I²C bus (SDA, SCL lines) due to the power supply will be less than 300mV peak-to-peak. This noise measurement should be made with an oscilloscope bandwidth limited to 100MHz. Measurements must be made at the power supply output connector with 10Kohm resistors pulled up to standby output and 47pF ceramic capacitors to standby output return.

COMMUNICATION BUS DESCRIPTIONS

I²C Bus Internal Implementation, Pull-ups and Bus Capacitances

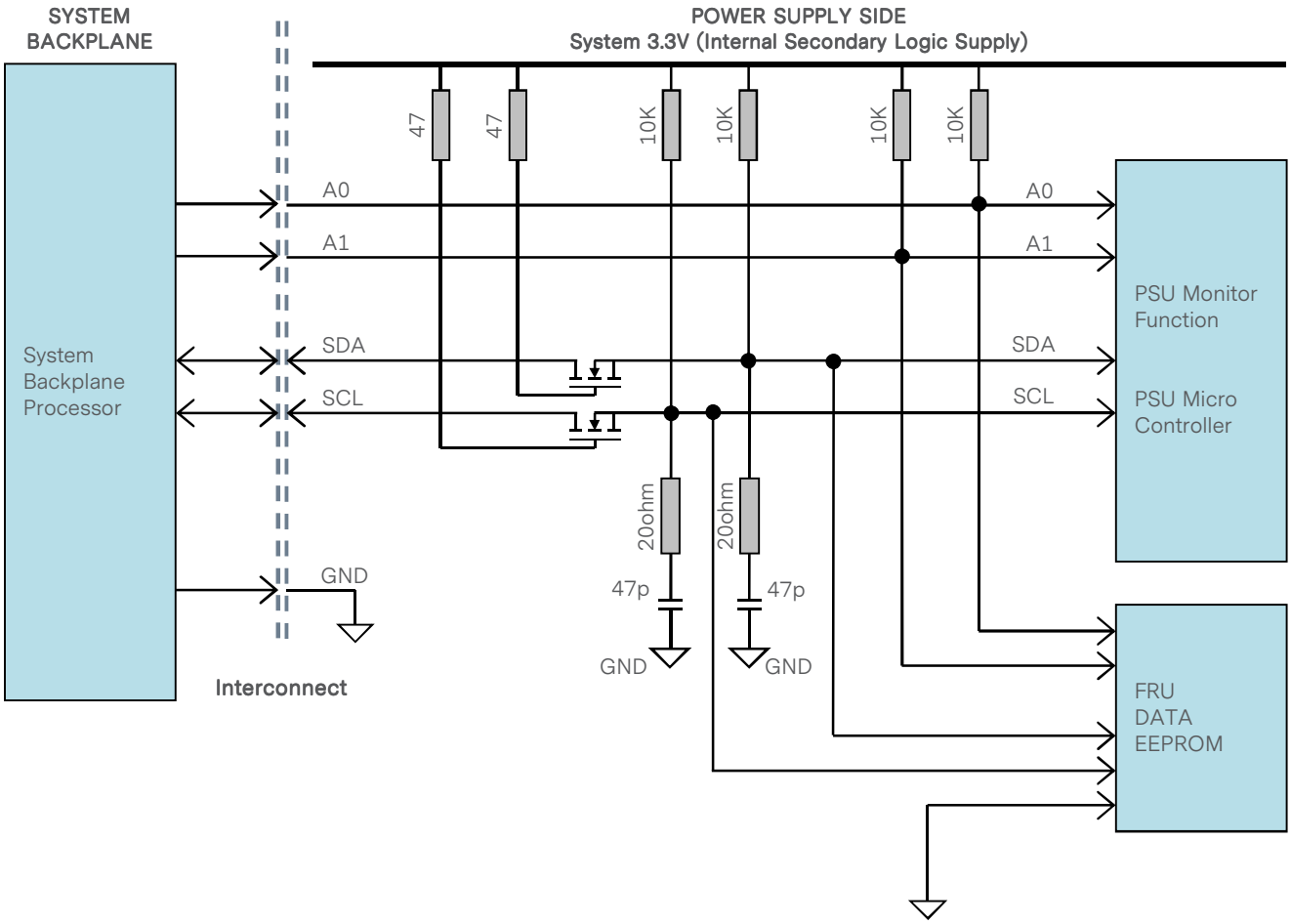

I²C Bus - Recommended external pull-ups

Electrical and interface specifications of I²C signals (referenced to standby output return pin, unless otherwise indicated):

Parameter	Condition	Symbol	Min	Type	Max	Unit
SDA, SCL Internal Pull-up Resistor		R_{int}	-	10	-	Kohm
SDA, SCL Internal Bus Capacitance		C_{int}	-	47	-	pF
Recommended External Pull-up Resistor	1 to 4 PSU	R_{ext}	-	2.2	-	Kohm

COMMUNICATION BUS DESCRIPTIONS

Logic Levels

CSU1300AP series power supply I²C communication bus will respond to logic levels as per below:

Logic High: 3.3V nominal (Spec is 2.1V to 5.5V)**
Logic Low: 500mV nominal (Spec is 800mV max)**

**Note: Artesyn 73-769-001 I²C adapter was used.

Timings

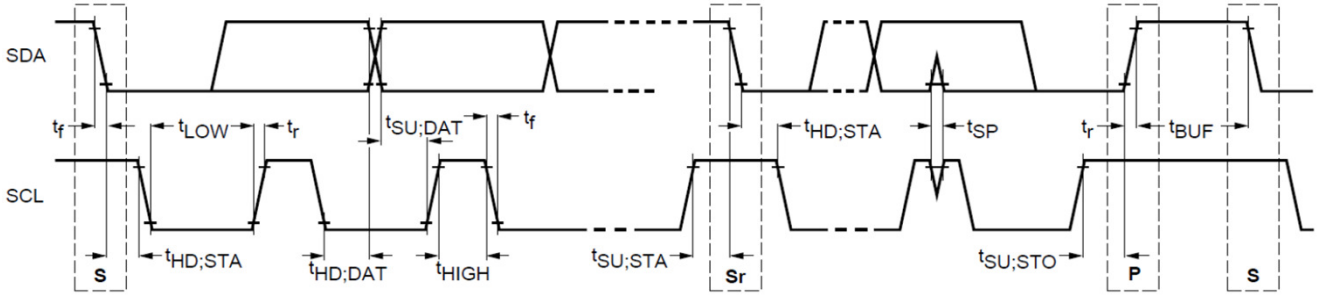

Parameter	Symbol	Standard-Mode Specs		Actual Measured		Unit
		Min	Max			
SCL clock frequency	f_{SCL}	10	100	98		KHz
Hold time (repeated) START condition	$t_{HD;STA}$	4.0	-	5		uS
LOW period of SCL clock	t_{LOW}	4.7	-	5.2		uS
HIGH period of SCL clock	t_{HIGH}	4.0	-	4.8		uS
Setup time for repeated START condition	$t_{SU;STA}$	4.7	-	5.4		uS
Data hold time	$t_{HD;DAT}$	0	3.65	0.6		uS
Data setup time	$t_{SU;DAT}$	250	-	4200		nS
Rise time	t_r	-	1000	SCL = 669.6	SDA = 710.4	nS
Fall time	t_f	-	300	SCL = 156.8	SDA = 146	nS
Setup time for STOP condition	$t_{SU;STO}$	4.0	-	5.02		uS
Bus free time between a STOP and START condition	t_{BUF}	4.7	-	95***		uS

***Note: Artesyn 73-769-001 I²C adapter (USB-to-I2C) and Universal PMBus™ GUI software was used.

COMMUNICATION BUS DESCRIPTIONS

Device Addressing

The CSU1300AP series will respond to supported commands on the I^2C bus that are addressed according to A1 and A0 pins of output connector.

Address pins are held HIGH by default via pulled up to internal 3.3V supply. To set the address as “0”, the corresponding address line needs be pulled down to logic ground level. Below tables show the address of the power supply with A0 and A1 pins set to either “0” or “1”.

PSU Slot	Slot ID Bits		PMBus™ Address	EEPROM (FRU) Read Address
	A1	A0		
1	0	0	0xB0	0xA0
2	0	1	0xB2	0xA2
3	1	0	0xB4	0xA4
4	1	1	0xB6	0xA6

COMMUNICATION BUS DESCRIPTIONS

I²C Clock Synchronization

The CSU1300AP-3 series power supply applies clock stretching. An addressed slave power supply holds the clock line (SCL) low after receiving (or sending) a byte, indicating that it is not yet ready to process more data. The system master that is communicating with the power supply will attempt to raise the clock to transfer the next bit but must verify that the clock line was actually raised. If the power supply is clock stretching, the clock line will still be low (because the connections are open-drain).

The maximum time-out condition for clock stretching for CSU1300AP series is 30 milliseconds.

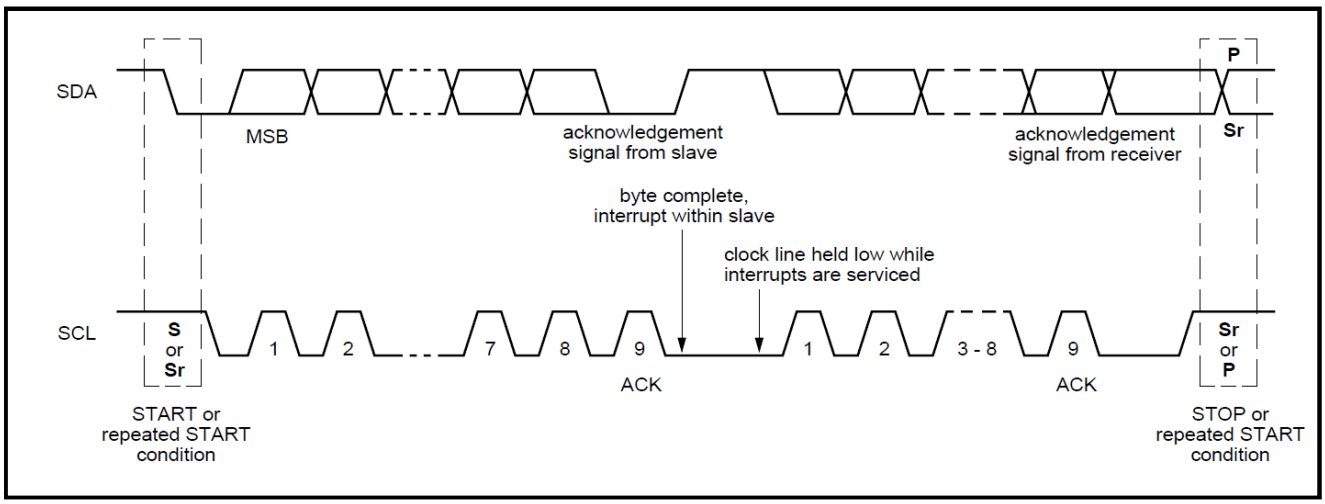

COMMUNICATION BUS DESCRIPTIONS

Cold Redundancy

The CSU1300AP series power supply supports capabilities for cold redundancy. This capability helps improve the efficiency and iTHD of the power subsystem when more than one power supply is used in a system. Cold redundancy uses the PMBus™ manufacturer specific command area to define commands for the system to configure the power supplies for cold redundancy.

Overview

A system in 1+1, 2+1, 3+1 or 2+2 redundant mode configuration may not be operated at the optimum efficiency especially when the load is <50% of each power supply's capacity. The cold redundancy mode addresses this condition, where certain power supplies in a system can go into "cold standby" mode, thereby consuming the least amount of power and still be redundant.

Each power supply in this system will have a preprogrammed threshold for output current by which that power supply may determine whether to be actively providing power to the system, or be in cold standby state. A CR_BUS signal that connects all power supplies in the system, also indicates whether it is safe for power supplies in cold redundant mode to enter into cold standby state. The CR_BUS signal prevents power supplies from going into cold standby mode whenever there isn't any active power supply.

The following table shows the state of the power supplies programmed for cold standby mode based on the condition of the CR_BUS signal and the load share bus voltage.

Logic Matrix for Cold Standby Power Supplies:

CR_BUS	Load Share	Cold Standby Power Supply State(s)
High	< VCR_ON	Cold Standby
Low	< VCR_ON	Active
High	> VCR_ON	Active
Low	> VCR_ON	Active

Note: VCR_ON is the voltage threshold set inside the power supplies configured for cold standby which tells them to power down into cold standby state when the load share voltage is less than VCR_ON.

When CR_BUS is asserted (or goes low), all power supplies in the system should go active and immediately provide power to the system.

SMBus Commands for Cold Redundancy

Configuring Cold Redundancy with Cold_Redundancy_Config (D0h)

The PMBus™ manufacturer specific command MFR_SPECIFIC_00 is used to configure the operating state of the power supply related to cold redundancy. This command for Cold_Redundancy_Config is D0h. The table below shows the configuration of the power supply based on the value in the Cold_Redundancy_Config register. PEC is used for read/write of this register.

COMMUNICATION BUS DESCRIPTIONS

Cold Redundancy Configuration Table

Cold_Redundancy_Config (D0h)		
Value	**State**	**Description**
00h	Standard Redundancy (Default Power on State)	Turns the power supply into standard redundant load sharing mode. The power supply's CR_BUS signal shall be OPEN but still pull the bus low if a fault occurs.
55h	Cold Redundant Active	Defines this power supply to be the one that is always ON in a cold redundancy configuration.
02h	Cold Standby 1	Defines the power supply that is the first to turn on in a cold redundant configuration as the load increases.
03h	Cold Standby 2	Defines the power supply that is the second to turn on in a cold redundant configuration as the load increases.
04h	Cold Standby 3	Defines the power supply that is the third to turn on in a cold redundant configuration as the load increases.
05h	Always Cold Standby	Defines this power supply to be always in cold redundant configuration no matter what the load condition.
06h-FFh	Reserved	

When the CR_BUS transitions from a high to a low state; each PSU programmed to be in cold standby state shall be put into standard redundancy mode (Cold_Redundancy_Config = 00h). For the power supplies to enter cold redundancy mode the system must re-program the power supplies using the Cold_Redundancy_Config command.

COMMUNICATION BUS DESCRIPTIONS

Cold Redundancy State Table

Cold Redundant Config	Operating State	Power Supply Fault Status	CR_Bus#
Active	On	OK	High
Cold Standby 1,2,3	On	OK	Open
Cold Standby 1,2,3	Cold Standby	OK	Open
Active	Off	Fault	Low
Cold Standby 1,2,3	On	Fault	Low
Cold Standby 1,2,3	Cold Standby	Fault	Low

The CR_Status input is based on both the Cold_Redundancy_Config register as well as the fault state of the power supply. The resulting output is a tri-state output. The output is low when there is a fault in any power supply or when cold redundancy is disabled. The output is high only when a power supply is programmed for the cold redundancy active mode and it is functioning OK. The output is open only when the power supply is programmed for cold redundant standby mode and is functioning OK. This means that there needs to be one good power supply programmed for active cold redundant mode to allow power supply to function in cold standby mode; otherwise, all power supplies will power ON and come out of cold redundant mode.

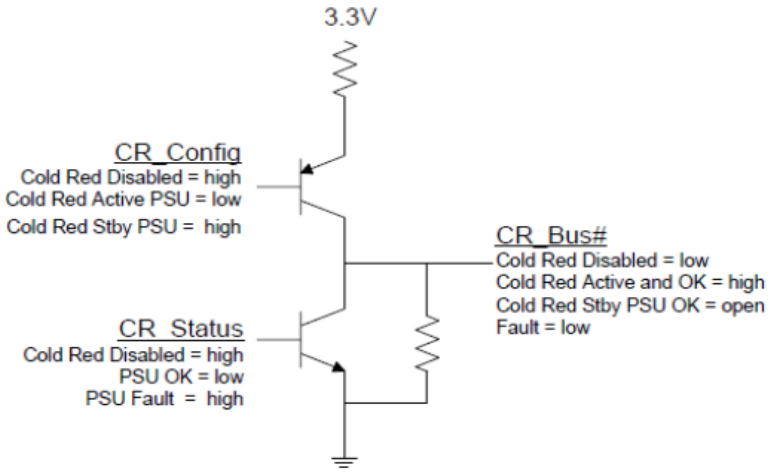

CR_BUS# Functional Diagram

CR_BUS Signal Characteristic

Signal Type	Active: Tri-State Output Cold Standby: Input Signal	
	Min	Max
Logic Level Low (Power Supply ON)	0V	0.4V
Logic Level High (Power Supply OFF)	2.4V	3.46V
Source Current, Cold Amber = High	2mA	-
Sink Current, Cold Amber = Low	400µA	-
Cold Amber Fault Delay	-	10µs
Cold Amber Turn On Delay	-	100µs

COMMUNICATION BUS DESCRIPTIONS

BMC Requirements

The BMC uses the Cold_Redundancy_Config command to configure the power supply's roll in cold redundancy and to enabled/disable cold redundancy. It is recommended that the BMC schedules a rolling change for which PSU is the Active, Cold Stby 1, Cold Stby 2, and Cold Stby 3 power supply. This allows for equal loading across power supply over their life.

Events that trigger a re-configuration of the power supplies using the Cold_Redundancy_config command.

- AC Power ON
- PSON power ON
- Power supply Failure
- Power supply inserted into system
- Power supply removed from the system

COMMUNICATION BUS DESCRIPTIONS

Black Box

The power supply can store PMBus and other data into non-volatile memory upon a critical failure that caused the power supply to shut down. The data can be accessed via the PMBus interface by applying power to the $12V_{SB}$ pins. No AC power needs to be applied to the power supply.

Data is saved to the black box for the following fault events:

- General fault
- Over voltage on output
- Over current on output
- Loss of AC input
- Input voltage fault
- Fan failure
- Over temperature

Black Box Process:

1) System writes system tracking data to the power supply RAM at power ON.
2) System writes the real time clock data to the PSU RAM once every ~5 minutes.
3) Power supply tracks the number of PSON and AC power cycles in EEPROM.
4) Power supply tracks ON time in EEPROM.
5) Power supply loads warning and fault event counter data from EEPROM into RAM.
6) Upon a warning event, the PSU will increment the associated counter in RAM.
7) Upon and fault event, the PSU will increment the associated counter in RAM.
8) Upon a fault event that causes the PSU to shut down, all event data in the PSU's RAM is saved to event data location N in the power supply's EEPROM. This data includes the real time clock, the number of AC & PSON power cycles, PSU ON time, warning event counters and fault event counters.

COMMUNICATION BUS DESCRIPTIONS

Commands:

Name: MFR_BLACKBOX
Format: Read Block with PEC (238 bytes)
Code: DCh

	Item	Number of Bytes	Description
System tracking data	System top assembly number	10	The system will write its Intel part number for the system top assembly to the power supply when it is powered ON. This is 9 ASCII characters.
	System serial number	10	The system will write the system serial number to the power supply when it is powered ON. This includes the serial number and date code.
	Motherboard assembly number	10	The system will write the motherboard Intel part number for the assembly to the power supply when it is powered ON. This is 9 ASCII characters.
	Motherboard serial number	10	The system will write the motherboard's serial number to the power supply when it is powered ON. This includes the serial number and date code.
	Present total PSU ON time	3	Total on time of the power supply with PSON asserted in minutes. LSB = 1 minute.
	Present number of AC power cycles	2	Total number of times the power supply powered OFF then back ON due to loss of AC power. This is only counted when the power supply's PSON signal is asserted. This counter will stay at FFFFh once the max is reached.
	Present number of PSON power cycles	2	Total number of times the power supply is powered OFF then back ON due to the PSON signal de-asserting. This is only counted when AC power is present to the power supply. This counter will stay at FFFFh once the max is reached.
Power supply event data (N)		38	Most recent occurrence of saved black box data.
Time stamp			The power supply will track these time and power cycle counters in RAM. When the a black box event occurs the data is saved into the black box.
	Power supply total power on time	3	Total on time of the power supply in minutes. LSB = 1 minute.
	Real time clock data from system (Reserved for future use)	4	This time stamp does not need to generated by the power supply. The system rights a real time clock value periodically to the power supply using the MFR_REAL_TIME command. Format is based on IPMI 2.0. Time is an unsigned 32-bit value representing the local time as the number of seconds from 00:00:00, January 1, 1970. This format is sufficient to maintain time stamping with 1 second resolution past the year 2100. This is based on a long standing UNIX-based standard for time keeping, which represents time as the number of seconds from 00:00:00, January 1, 1970 GMT. Similar time formats are used in ANSI C.
	Number of AC power cycles	2	Number of times the power supply powered OFF then back ON due to loss of AC power at the time of the event. This is only counted when the power supply's PSON signal is asserted.
	Number of PSON power cycles	2	Number of times the power supply is powered OFF then back ON due to the PSON signal deasserting at the time of the event. This is only counted when AC power is present to the power supply.

COMMUNICATION BUS DESCRIPTIONS

	Item	Number of Bytes	Description
PMBus			The power supply will save these PMBus values into the black box when a black box event occurs. Fast events may be missed due to the filtering effects of the PMBus sensors.
	STATUS_WORD	2	
	STATUS_IOUT	1	
	STATUS_INPUT	1	
	STATUS_TEMPERTATURE	1	
	STATUS_FAN_1_2	1	
	READ_VIN	2	
	READ_IIN	2	
	READ_IOUT	2	
	READ_TEMPERATURE_1	2	
	READ_TEMPERATURE_2	2	
	READ_FAN_SPEED_1	2	
	READ_PIN	2	
	READ_VOUT	2	
Event counters			The power supply will track the total number for each of the following events. These value will be saved to the black box when a black box event occurs. Once a value has reached 15, it will stay at 15 and not reset.
	AC shutdown due to under voltage on input	Lower ½	The power supply will save a count of these critical events to non-volatile memory each time they occur. The counters will increment each time the associated STATUS bit is asserted.
	Thermal shutdown	Upper ½	
	Over current or over power shutdown on output	Lower ½	
	General failure shutdown	Upper ½	
	Fan failure shutdown	Lower ½	
	Shutdown due to over voltage on output	Upper ½	
	Input voltage warning;no shutdown	Lower ½	The power supply will save into RAM a count of these warning events. Events are count only at the initial assertion of the event/bit. If the event persists without clearing the bit the counter will not be incremented. When the power supply shuts down it will save these warning event counters to non-volatile memory. The counters will increment each time the associated STATUS bit is asserted.
	Thermal warning; no shutdown	Upper ½	
	Output current power warning; no shutdown	Lower ½	
	Fan slow warning; no shutdown	Upper ½	
Power supply event data (N-1)		38	
Power supply event data (N-2)		38	
Power supply event data (N-3)		38	
Power supply event data (N-4)		38	

COMMUNICATION BUS DESCRIPTIONS

Name: MFR_REAL_TIME_BLACK_BOX
Format: Write/Read Block with PEC (4 bytes)
Code: DDh

The system will use this command to periodically write the real time clock data to the power supply.

Format is based on IPMI 2.0. Time is an unsigned 32-bit value representing the local time as the number of seconds from 00:00:00, January 1, 1970. This format is sufficient to maintain time stamping with 1 second resolution past the year 2100.

This is based on a long standing UNIX-based standard for time keeping, which represents time as the number of seconds from 00:00:00, January 1, 1970 GMT. Similar time formats are used in ANSI C.

Name: MFR_SYSTEM_BLACK_BOX
Format: Write/Read Block with PEC (40 bytes). Low byte first.
Code: DEh

The system uses this command to write the following data to the PSU.

Item	Bytes	
System top assembly number	1–10	Low bytes
System serial number	11–20	
Motherboard assembly number	21–30	
Motherboard serial number	31–40	High bytes

Name: MFR_BLACKBOX_CONFIG
Format: Read/Write Byte with PEC
Code: DFh

Bit	Value	Description
0	0 = disable black box function 1 = enable black box function	Writing a '1' enables the power supply with black box function. Writing a '0' disables the power supply black box function. The state of MFR_BLACKBOX_CONFIG will be saved in non-volatile memory so that it is not lost during power cycling. Intel will receive the power supply with the black box function enabled; bit 0 = '1'.

Name: MFR_CLEAR_BLACKBOX
Format: Send Byte with PEC
Code: E0h

The MFR_CLEAR_BLACKBOX command is used to clear all black box records simultaneously. This command is write only. There is no data byte for this command.

COMMUNICATION BUS DESCRIPTIONS

FRU (EEPROM) Data

The FRU (Field Replaceable Unit) data format is compliant with the Intel IPMI v1.0 specification.

The CSU1300AP series uses 1 page of EEPROM for FRU purpose. A page of EEPROM contains up to 256 byte-sized data locations.

Where: OFFSET -The OFFSET denotes the address in decimal format of a particular data byte within CSU1300AP series EEPROM.

VALUE -The VALUE details data written to a particular memory location of the EEPROM.

DEFINITION -The contents DEFINITION refers to the definition of a particular data byte.

CSU1300AP series FRU (EEPROM) Data:

OFFSET		DEFINITION	SPEC VALUE	
(DEC)	(HEX)	(REMARKS)	(DEC)	(HEX)
		COMMON HEADER, 8 BYTES		
0	00	**FORMAT VERSION NUMBER** (Common Header) 7:4 - Reserved, write as 0000b 3:0 - Format version number = 1h for this specification	1	01
1	01	**INTERNAL USE AREA OFFSET** (Not required, do not reserve)	0	00
2	02	**CHASSIS INFO AREA OFFSET** (Not required, do not reserve)	0	00
3	03	**BOARD INFO AREA OFFSET** (Not required, do not reserve)	0	00
4	04	**PRODUCT INFO AREA OFFSET**	1	01
5	05	**MULTI RECORD AREA OFFSET**	10	0A
6	06	**PAD** (Not required, do not reserve)	0	00
7	07	**ZERO CHECK SUM** (256 - (Sum of bytes 0 to 6))	244	F4
		PRODUCT INFORMATION AREA, 72 BYTES		
8	08	**FORMAT VERSION NUMBER** (Product Info Area) 7:4 - Reserved, write as 0000b 3:0 - Format version number = 1h for this specification	1	01
9	09	**PRODUCT INFO AREA LENGTH** (In multiples of 8 bytes)	9	09
10	0A	**Language** (English)	25	19
11	0B	**MANUFACTURER NAME** Type/Length (C7H) 7:6 - (11)b, 8-bit ASCII + Latin 1, 5:0 - (000111)b, 7-byte allocation	199	C7
		MANUFACTURER'S NAME 7 bytes sequence		
12	0C	"A"= 41h	65	41
13	0D	"R"= 52h	82	52
14	0E	"T"= 54h	84	54
15	0F	"E"= 45h	69	45
16	10	"S"= 53h	83	53
17	11	"Y"= 59h	89	59
18	12	"N"= 4Eh	78	4E
19	13	**PRODUCT NAME** Type/Length (D0H) Type = "ASCII+Latin 1" = (11)b length = 16 bytes = (010000)b	208	D0

COMMUNICATION BUS DESCRIPTIONS

CSU1300AP series FRU (EEPROM) Data:

OFFSET		DEFINITION	SPEC VALUE	
(DEC)	(HEX)	(REMARKS)	(DEC)	(HEX)
20 21 22 23 24 25 26 27 28 29 30 31 32 33 34 35	14 15 16 17 18 19 1A 1B 1C 1D 1E 1F 20 21 22 23	**Product Name,** 16 bytes sequence **"CRPS1300W"** In Decimal = 067d, 082d, 080d, 083d, 049d, 051d, 048d, 048d, 087d, 032d, 032d, 032d, 032d, 032d, 032d, 032d In Hex = 43H, 52H, 50H, 53H, 31H, 33H, 30H, 30H, 57H, 20H, 20H, 20H, 20H, 20H, 20H, 20H	67 82 80 83 49 51 48 48 87 32 32 32 32 32 32 32	43 52 50 53 31 33 30 30 57 20 20 20 20 20 20 20
36	24	**PRODUCT PART/MODEL NUMBER** Type/Length (CFH) Type = "ASCII+Latin 1" = (11)b length = 15 bytes = (001111)b	207	CF
37 38 39 40 41 42 43 44 45 46 47 48 49 50 51	25 26 27 28 29 2A 2B 2C 2D 2E 2F 30 31 32 33	**Part / Model Number** **"CSU1300AP-3-600"** In Decimal = 067d, 083d, 085d, 056d, 048d, 048d, 065d, 080d, 045d, 051d, 045d, 054d, 048d, 048d, 032d In Hex = 43H, 53H, 55H, 31H, 33H, 30H, 30H, 41H, 50H, 2DH, 33H, 2DH, 36H, 30H, 30H	67 83 85 49 51 48 48 65 80 45 51 45 54 48 48	43 53 55 31 33 30 30 41 50 2D 33 2D 36 30 30
52	34	**PRODUCT VERSION NUMBER** Type/Length (C2h) Type = "ASCII+Latin 1" = (11)b length = 2 bytes = (000010)b	194	C2
53 54	35 36	**Version,** 2 bytes sequence "XX"	XX XX	XX XX
55	37	**PRODUCT SERIAL NUMBER** Type/Length Type = "ASCII+Latin 1" = (11)b length = 13 bytes = (001101)b	205	CD
56 57 58 59 60 61 62 63 64 65 66 67 68	38 39 3A 3B 3C 3D 3E 3F 40 41 42 43 44	**Serial number,** 13 bytes sequence "XXXXXXXXXXXXX"	XX XX XX XX XX XX XX XX XX XX XX XX XX	XX XX XX XX XX XX XX XX XX XX XX XX XX
69	45	**Asset Tag** Type/Length Type = "ASCII+Latin 1" = (11)b length = 0 byte = (000000)b	192	C0

COMMUNICATION BUS DESCRIPTIONS

CSU1300AP series FRU (EEPROM) Data:

OFFSET		DEFINITION	SPEC VALUE	
(DEC)	(HEX)	(REMARKS)	(DEC)	(HEX)
71 72	47 48	**C1h** (Type/Length byte encoded to indicate no more info fields) **00h** - Any remaining unused space	193 0	C1 00
73 74 75 76 77 78	49 4A 4B 4C 4D 4E	**00h** - Any remaining unused space	0 0 0 0 0 0	00 00 00 00 00 00
79	4F	**ZERO CHECK SUM** (256 - (sum of bytes 8 to 78)) per unit Zero Check Sum: Should follow check sum calculation as per IPMI v1.3 specs		
Multi Record Area, 72 Bytes				
80 81 82 83 84	50 51 52 53 54	**Power Supply Record Header** Record type = 00 for power supply End of list / Record format version number Record length of power supply record Record CHECKSUM of power supply record (256 - (sum of bytes 85 to 108)) Header CHECKSUM of power supply record header (256 - (sum of bytes 80 to 83))	0 2 24	00 02 18
Power Supply Record				
85 86	55 56	**Overall Capacity of the Power Supply** 2 bytes sequence CSU1300AP-3 = 1300W 1300W = 0514H(LSB First)	20 5	14 05
87 88	57 58	**Peak VA, 2200VA** = 0898H 2 bytes sequence	152 8	98 08
89	59	**Inrush Current,** 35A In Decimal = 35 In Hex = 23H	35	23
90	5A	**Inrush Interval,** 10mS In Decimal = 10 In Hex = 0AH	10	0A
91 92	5B 5C	**Low End Input Voltage Range 1(10mV),** (90V / 10mV) 9000 = 2328H 2 bytes sequence In Decimal = 40 In Hex = 28H In Decimal = 35 In Hex = 23H	40 35	28 23
93 94	5D 5E	**High End Input Voltage Range 1(10mV),** (264V/10mV) 26400= 6720H 2 bytes sequence In Decimal = 32 In Hex = 20H In Decimal = 103 In Hex = 67H	32 103	20 67
95 96	5F 60	**Low End Input Voltage Range 2(10mV),** (Zero if single range) (signed)	0 0	00 00
97 98	61 62	**High End Input Voltage Range 2(10mV),** (Zero if single range) (signed)	0 0	00 00
99 100	63 64	**Low End Input Frequency Range,** 47Hz = 2FH **Low End Input Frequency Range,** 63Hz = 3FH	47 63	2F 3F
101	65	**AC Dropout Tolerance in ms,** 10mS= 0AH	10	0A

COMMUNICATION BUS DESCRIPTIONS

CSU1300AP series FRU (EEPROM) Data:

OFFSET		DEFINITION	SPEC VALUE	
(DEC)	(HEX)	(REMARKS)	(DEC)	(HEX)
102	66	**Binary Flags: For each of the following binary flags No = 0, Yes = 1.** Bits 7-5: RESERVED, Write as 000b. Bit 4: Tachometer pulses per rotation / Predictive fail polarity BIT = 0 Bit 3: Hot swap / Redundancy support BIT = 1 Bit 2: Auto switch support BIT = 1 Bit 1: Power factor correction support BIT = 1 Bit 0: Predictive fail support BIT = 0	14	0E
103 104	67 68	**Peak Wattage and Sustained Time,** (Set for 1500Watts / 15Sec) Bits 15:12 - Hold up time in seconds Bits 11:0 - Peak capacity (watts) (LSB First) [FFFh = unspecified] In Decimal = 220 In Hex = DCH (LSB First) In Decimal = 245 In Hex = F5H	220 245	DC F5
105 106 107	69 6A 6B	**Combined Wattage,** No combined voltages for power supply	0 0 0	00 00 00
108	6C	**Predictive Fail Tachometer Lower Threshold,** not applicable. Predictive failure is not supported.	0	00
		12V DC OUTPUT RECORD HEADER		
109 110 111 112 113	6D 6E 6F 70 71	Record type = 09 for dc output record End of list / Record format version number for 12V DC output record Record length of 12V DC output record Record CHECKSUM of 12V DC output record (256 - (sum of bytes 114 to 126)) Header CHECKSUM of 12V DC output record header (256 - (sum of bytes 109 to 112))	9 2 13	09 02 0D
		12V DC OUTPUT RECORD		
114	72	**Output Information,** 001 = 01H Bit 7: Standby information = 0B Bits 6-5: Reserved, write as 00B Bit 4: Current units, 0b = 10mA, Bits 3-0: Output number 1 = 001B	1	1
115 116	73 74	**Nominal Voltage (10mV),** (12.00V / 10mV => 1200 = 04C4H) 2 bytes sequence In Decimal = 196 In Hex = C4H In Decimal = 4 In Hex = 04H	196 4	C4 04
117 118	75 76	**Maximum Negative Voltage Deviation (10mV),** (11.80V / 10mV => 1180 = 049CH) 2 bytes sequence In Decimal = 156 In Hex = 9CH In Decimal = 4 In Hex = 04H	156 4	9C 04
119 120	77 78	**Maximum Positive Voltage Deviation (10mV),** (12.60V / 10mV => 1260 = 04ECH) 2 bytes sequence In Decimal = 236 In Hex = ECH In Decimal = 4 In Hex = 04H	236 4	EC 04

COMMUNICATION BUS DESCRIPTIONS

CSU1300AP series FRU (EEPROM) Data:

OFFSET		DEFINITION	SPEC VALUE	
(DEC)	(HEX)	(REMARKS)	(DEC)	(HEX)
		Ripple and Noise pk-pk (mV), 120 = 78H 2 bytes sequence		
121	79	In Decimal = 120 In Hex = 78H	120	78
122	7A	In Decimal = 0 In Hex = 00H	0	00
		Minimum Current Draw (10mA), 0mA = 00H 2 bytes sequence		
123	7B	In Decimal = 0 In Hex = 00H	0	00
124	7C	In Decimal = 0 In Hex = 00H	0	00
		Maximum Current Draw (10mA), (108.33A / 10mA => 10833 = 2A4EH) 2 bytes sequence		
125	7D	In Decimal = 78 In Hex = 4EH	78	4E
126	7E	In Decimal = 42 In Hex = 2AH	42	2A
12VSB OUTPUT RECORD HEADER				
127	7F	**Record type** = 01 for DC output record	1	01
128	80	End of list /record format version number for 12VSB output record	130	82
129	81	Record length of 12VSB output record	13	0D
130	82	Record CHECKSUM of 12VSB output record (256 - (sum of bytes 132 to 144)		
131	83	Header CHECKSUM of 12VSB output record header (256 - (sum of bytes 127 to 130)		
12VSB OUTPUT RECORD				
132	84	**Output Information,** 130 = 82H Bit 7: Standby information = 1B Bits 6-4: Reserved, write as 000B Bits 3-0: Output number 2 = 0010B	132	82
		Nominal Voltage (10mV), (11.40V / 10mV => 1140 = 0474H) 2 bytes sequence		
133	85	In Decimal = 176 In Hex = B0H	176	B0
134	86	In Decimal = 4 In Hex = 04H	4	04
		Maximum Negative Voltage Deviation (10mV), (11.40V / 10mV => 1140 = 0474H) 2 bytes sequence		
135	87	In Decimal = 116 In Hex = 74H	116	74
136	88	In Decimal = 4 In Hex = 04H	4	04
		Maximum Positive Voltage Deviation (10mV), (12.60V / 10mV => 1260 = 04ECH) 2 bytes sequence		
137	89	In Decimal = 236 In Hex = ECH	236	EC
138	8A	In Decimal = 4 In Hex = 04H	4	04
		Ripple and Noise pk-pk (mV), 120 = 78H 2 bytes sequence		
139	8B	In Decimal = 120 In Hex = 78H	120	78
140	8C	In Decimal = 0 In Hex = 00H	0	00
		Minimum Current Draw (mA), 0mA = 00H 2 bytes sequence		
141	8D	In Decimal = 0 In Hex = 00H	0	00
142	8E	In Decimal = 0 In Hex = 00H	0	00
		Maximum Current Draw (mA), (3A / mA => 3000 = 0BB8H) 2 bytes sequence		
143	8F	In Decimal = 184 In Hex = B8H	184	B8
144	90	In Decimal = 11 In Hex = 0BH	11	0B

COMMUNICATION BUS DESCRIPTIONS

CSU1300AP series FRU (EEPROM) Data:

OFFSET		DEFINITION	SPEC VALUE	
(DEC)	(HEX)	(REMARKS)	(DEC)	(HEX)
145	91	Reserved. Default value is 0.	0	00
146	92	Reserved. Default value is 0.	0	00
147	93	Reserved. Default value is 0.	0	00
148	94	Reserved. Default value is 0.	0	00
149	95	Reserved. Default value is 0.	0	00
150	96	Reserved. Default value is 0.	0	00
151	97	Reserved. Default value is 0.	0	00
152	98	(98h-FFh is reserved. Default value is 0.)	0	00
153	99		0	00
154	9A		0	00
155	9B		0	00
156	9C		0	00
157	9D		0	00
158	9E		0	00
159	9F		0	00
160	A0		0	00
161	A1		0	00
162	A2		0	00
163	A3		0	00
164	A4		0	00
165	A5		0	00
166	A6		0	00
167	A7		0	00
168	A8		0	00
169	A9		0	00
170	AA		0	00
171	AB		0	00
172	AC		0	00
173	AD		0	00
174	AE		0	00
175	AF		0	00
176	B0		0	00
177	B1		0	00
178	B2		0	00
179	B3		0	00
180	B4		0	00
181	B5		0	00
182	B6		0	00
183	B7		0	00
184	B8		0	00
185	B9		0	00
186	BA		0	00
187	BB		0	00
188	BC		0	00
189	BD		0	00
190	BE		0	00
191	BF		0	00
192	C0		0	00
193	C1		0	00
194	C2		0	00
195	C3		0	00
196	C4		0	00
197	C5		0	00
198	C6		0	00
199	C7		0	00
200	C8		0	00
201	C9		0	00
202	CA		0	00

COMMUNICATION BUS DESCRIPTIONS

CSU1300AP series FRU (EEPROM) Data:

OFFSET		DEFINITION	SPEC VALUE	
(DEC)	(HEX)	(REMARKS)	(DEC)	(HEX)
203	CB	(98h-FFh is reserved. Default value is 0.)	0	00
204	CC		0	00
205	CD		0	00
206	CE		0	00
207	CF		0	00
208	D0		0	00
209	D1		0	00
210	D2		0	00
211	D3		0	00
212	D4		0	00
213	D5		0	00
214	D6		0	00
215	D7		0	00
216	D8		0	00
217	D9		0	00
218	DA		0	00
219	DB		0	00
220	DC		0	00
221	DD		0	00
222	DE		0	00
223	DF		0	00
224	E0		0	00
225	E1		0	00
226	E2		0	00
227	E3		0	00
228	E4		0	00
229	E5		0	00
230	E6		0	00
231	E7		0	00
232	E8		0	00
233	E9		0	00
234	EA		0	00
235	EB		0	00
236	EC		0	00
237	ED		0	00
238	EE		0	00
239	EF		0	00
240	F0		0	00
241	F1		0	00
242	F2		0	00
243	F3		0	00
244	F4		0	00
265	F5		0	00
246	F6		0	00
247	F7		0	00
248	F8		0	00
249	F9		0	00
250	FA		0	00
251	FB		0	00
252	FC		0	00
253	FD		0	00
254	FE		0	00
255	FF		0	00

PMBus™ SPECIFICATIONS

The CSU1300AP series is compliant with the industry standard PMBus™ protocol for monitoring and control of the power supply via the I²C interface port.

CSU1300AP Series PMBus™ General Instructions

Equipment Setup

The following is typical I²C communication setup:

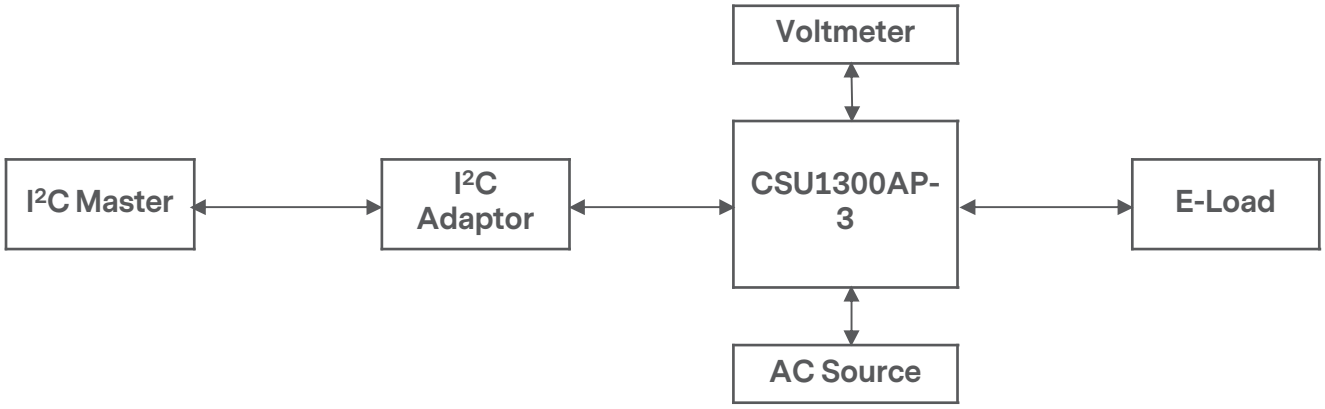

PMBus™ SPECIFICATIONS

The CSU1300AP Series Supported PMBus™ Command List:

Command Code	Command Name	Default Value	Access Type	Data Bytes	Data Format	Description
00h	PAGE	00	R	1	Hex	Valid input: 00h, 01h, FFh
01h	OPERATION	80	R/W	1	Bitmapped	Used to turn the unit ON/OFF in conjunction with the input PSON pin.
	b7:6	10				00 - Immediate turn OFF (No sequencing) 01 - Soft turn OFF (With sequencing) 10 - PSU ON
	b5:4	00				Reserved
	b3:2	00				Reserved
	b1:0	00				Reserved
02h	ON_OFF_CONFIG	1D	R/W	1	Bitmapped	Unit needs CONTROL pin and OPERATION to power-up, where the CONTROL pin and OPERATION has to be asserted for start-up. There will be a minimum of 1mS delay time when the power supply is turned off remotely.
03h	CLEAR_FAULTS	00	S		N/A	Send byte w/PEC
05h	PAGE_PLUS_WRITE		BW			Used with STATUS_INPUT, STATUS_TEMPERATURE, STATUS_IOUT
06h	PAGE_PLUS_READ		BR			Used with STATUS_INPUT, STATUS_TEMPERATURE, STATUS_IOUT, STATUS_WORD
19h	CAPABILITY	90	R	1	Bitmapped	Provides a way for the hosts system to determine some key capabilities of a PMBus™ device.
	b7 - Packet Error Checking	1				0 - PEC not supported 1 - PEC supported
	b6:5 - Maximum Bus Speed	00				00 - Maximum supported bus speed, 100KHz 01 - Maximum supported bus speed, 400KHz 10 - Maximum supported bus speed, 1MHz 11 - Reserved
	b4 - SMBALERT#	1				0 - SMBus Alert Pin not supported 1 - SMBus Alert Pin supported
	b3 - Numeric Format	0				0 - Linear11, Ulinear16, Slinear16, or Direct 1 - IEEE half precision floating point format
	b2 - AVSBus	0				0 - AVSBus not supported 1 - AVSBus supported
	b1:0	00				Reserved

PMBus™ SPECIFICATIONS

The CSU1300AP Series Supported PMBus™ Command List:

Command Code	Command Name	Default Value	Access Type	Data Bytes	Data Format	Description
1Ah	QUERY	-	BR/BW		N/A	Used to determine if the PSU supports a specific command; It should return the proper information about any commands listed.
1Bh	SMBALERT_MASK	-	BR/BW		N/A	Default masks per Intel spec: Page 00: STATUS_VOUT = FFh STATUS_IOUT = FFh STATUS_INPUT = FFh STATUS_TEMP = FFh STATUS_CML = FFh Page 01: STATUS_VOUT = FFh STATUS_IOUT = DFh STATUS_INPUT = EFh STATUS_TEMP = BFh STATUS_CML = FFh Non-paged: STATUS_FANS_1_2 = FFh
20h	VOUT_MODE	17	R	1	Bitmapped	Specifies the mode and parameters of output voltage related data formats.
30h	COEFFICIENTS	-	BR/BW	5	Hex	Use to retrieve the m, b and R coefficients, needed for DIRECT data format.
	byte 5	00				R byte
	byte 4:3	0000				b low byte, b high byte
	byte 2:1	0000				m low byte, m high byte
3Ah	FAN_CONFIG_1_2	90	R	1	Bitmapped	
	b7	1				0 - No fan is installed in position 1 1 - Fan is installed in position 1
	b6	0				0 - Fan is commanded in duty cycle 1 - Fan is commanded in RPM
	b5:4	01				00 - 1 pulse per revolution 01 - 2 pulses per revolution 10 - 3 pulses per revolution 11 - 4 pulses per revolution
	b3:0	0000				Reserved
3Bh	FAN_COMMAND_1	0000	R/W	2	Linear	Adjusts the operation of the fans. The device may override the command, if it requires higher value, to maintain proper device temperature. Duty cycle control - Commands speeds from 0 to 100%
4Ah	IOUT_OC_WARN_LIMIT	EBE8	R/W	2	Linear	Sets the over current warning threshold in Amps. (125.00A)
51h	OT_WARN_LIMIT	EB98	R/W	2	Hex	Secondary ambient temperature warning threshold, in degree C. Operating limit (115degC)

PMBus™ SPECIFICATIONS

The CSU1300AP Series Supported PMBus™ Command List:

Command Code	Command Name	Default Value	Access Type	Data Bytes	Data Format	Description
79h	STATUS_WORD	-	R	2	Bitmapped	Summary of units fault and warning status.
	b15 - VOUT					An output voltage fault or warning has occurred.
	b14 – IOUT/POUT					An output current or power fault or warning has occurred.
	b13 - INPUT					An input voltage, current or power fault or warning as occurred.
	b11 - POWER_GOOD#					The POWER_GOOD signal is de-asserted.
	b10 - FANS					A fan or airflow fault or warning has occurred.
	b9 - OTHER					
	b8 - UNKNOWN					
	b7 - BUSY					Not supported.
	b6 - OFF					Unit is OFF.
	b5 - VOUT_OV_FAULT					Not supported.
	b4 - IOUT_OC_FAULT					Output over-current fault has occurred.
	b3 - VIN_UV_FAULT					An input under-voltage fault has occurred.
	b2 - TEMPERATURE					A temperature fault or warning has occurred.
	b1 - CML					A communication, memory or logic fault has occurred.
	b0 – NONE OF THE ABOVE					
7Ah	STATUS_VOUT	-	R	1	Bitmapped	
	b7 - VOUT Overvoltage Fault					VOUT Overvoltage Fault
	b4 - VOUT Under-voltage Fault					VOUT Under-voltage Fault
7Bh	STATUS_IOUT	-	R	1	Bitmapped	
	b7 - IOUT Overcurrent Fault					IOUT Overcurrent Fault
	b5 - IOUT Overcurrent Warning					IOUT Overcurrent Warning
	b1 - POUT_OP_FAULT					POUT_OP_FAULT
	b0 - POUT_OP_WARNING					POUT_OP_WARNING
7Ch	STATUS_INPUT	-	R	1	Bitmapped	Input related faults and warnings
	b7 - VIN_OV_FAULT					VIN Overvoltage Fault
	b5 - VIN_UV_WARNING					VIN Under-voltage Warning
	b4 - VIN_UV_FAULT					VIN Under-voltage Fault
	b3 - Unit Off for Low Input Voltage					Unit is OFF for insufficient input voltage.
	b1 - IIN_OC_WARNING					IIN Overcurrent Warning
	b0 - PIN_OP_WARNING					PIN Overpower Warning
7Dh	STATUS_TEMPERATURE	-	R	1	Bitmapped	Temperature related faults and warnings
	b7 - Over Temperature Fault					Over Temperature Fault
	b6 - Over Temperature Warning					Over Temperature Warning

PMBus™ SPECIFICATIONS

The CSU1300AP Series Supported PMBus™ Command List:

Command Code	Command Name	Default Value	Access Type	Data Bytes	Data Format	Description
80h	STATUS_MFR_SPECIFIC	01	R	1	Hex	00h - no input 01h - AC input 02h - DC input
81h	STATUS_FANS_1_2	00	R	1	Bitmapped	
	b7 - Fan1 Fault					Fan1 fault
	b5 - Fan1 Warning					Fan1 warning
	b3 - Fan1 Speed Overridden					Fan1 speed overridden
86h	READ_EIN		BR	6	Direct	Returns the accumulated input power over time.
87h	READ_EOUT		BR	6	Direct	Returns the accumulated output power over time.
88h	READ_VIN		R	2	Linear	Returns input voltage in Volts AC.
89h	READ_IIN		R	2	Linear	Returns input current in Amperes.
8Bh	READ_VOUT		R	2	Linear	Returns the actual, measured voltage in Volts.
8Ch	READ_IOUT		R	2	Linear	Returns the output current in Amperes.
8Dh	READ_TEMPERATURE_1 (Ambient)		R	2	Linear	Returns the ambient temperature in degree Celsius.
8Eh	READ_TEMPERATURE_2 (Hot Spot)		R	2	Linear	Returns the hot pot temperature in degree Celsius.
8Fh	READ_TEMPERATURE_3 (Pri-Spot)		R	2	Linear	
90h	READ_FAN_SPEED_1		R	2	Linear	Speed of fan 1
96h	READ_POUT		R	2	Linear	Returns the output power in Watts.
97h	READ_PIN		R	2	Linear	Returns the input power in Watts.
98h	PMBUS_REVISION	22	R	1	Bitmapped	Reads the PMBus revision number.
	b7:5	0010				Part 1 Revision 0001 - Revision 1.1 0010 - Revision 1.2
	b4:0	0010				Part 2 Revision 0001 - Revision 1.1 0010 - Revision 1.2
99h	MFR_ID	ARTESYN#### #### (0x41 52 54 45 53 59 4E 23 23 23 23 23 23 23 23)	BR	15	ASCII	Abbrev or symbol of manufacturers name, ASCII format.
9Ah	MFR_MODEL	CSU1K3AP-3-600	BR	14	ASCII	Manufacturers model number, ASCII format.
9Bh	MFR_REVISION	NA	BR	2	ASCII	“xx", where x is an alphanumeric character that represents the hardware revision.
9Ch	MFR_LOCATION		BR		ASCII	Manufacturers facility, ASCII format.
9Eh	MFR_SERIAL		BR	14	ASCII	Unit serial number, ASCII format.
9Fh	APP_PROFILE_SUPPORT		BR			
A6h	MFR_IOUT_MAX	108	R/W	2	Linear	Maximum output current (108A)
A7h	MFR_POUT_MAX	1300	R/W	2	Linear	Maximum output power (1300W)

PMBus™ SPECIFICATIONS

The CSU1300AP Series Supported PMBus™ Command List:

Command Code	Command Name	Default Value	Access Type	Data Bytes	Data Format	Description
A8h	MFR_TAMBIENT_MAX		R			
A9h	MFR_TAMBIENT_MAX		R			
C0h	MFR_MAX_TEMP_1 (Ambient)	78	R	2	Linear	Maximum ambient temperature (78degC)
C1h	MFR_MAX_TEMP_2 (Hot Spot)	120	R	2	Linear	Maximum hot spot temperature (120degC)
D0h	MFR_COLD_REDUNDANCY _CONFIG	00	R/W	1	Hex	00 - Normal 01 - Active 02 - Cold Standby 1 03 - Cold Standby 2 04 - Cold Standby 3 05 - Always Cold Standby
D4h	MFR_HW_COMPATIBILITY	0	BR/W			
D6h	MFR_FWUPLOAD_MODE		R/W			
D7h	MFR_FWUPLOAD		BW			
D8h	MFR_FWUPLOAD_STATUS		R	2		
D9h	MFR_FW_REVISION	Varies	BR	3	Hex	(MSB) = major revision mid byte secondary revision (LSB) = primary revision
DCh	MFR_BLACKBOX	-	BR	230		

PMBus™ SPECIFICATIONS

The CSU1300AP Series Firmware Update Command List:
The power supply uses the following commands during the boatload process.

Command Code	Command Name	Default Value	Access Type	Data Bytes	Description
D4h	MFR_HW_COMPATIBILITY	-	R	-	This is a COMPATIBILITY value used to tell if there are any changes in the FW that create an incompatibility with the FW. This value only changes when the PSU HW is changed creating an incompatibility with older versions of FW.
D5h	MFR_FWUPLOAD_CAPABILITY	-	R	-	The system can read the power supply's FW upload mode capability using this command. For any given power supply, more than one FW upload mode may be supported. The supported FW upload mode(s) must support updating all available FW in the power supply. This power supply supports FW uploading in standby mode only. Bit 0: "1" FW uploading in standby mode only All other bits configurations are not supported.
D6h	MFR_FWUPLOAD_MODE	-	R/W	-	Writing a "1" puts the power supply into firmware upload mode and gets it ready to receive the first image block via the MFR_FW_UPLOAD command. The system can use this command at any time to restart sending the FW image. Writing a "0" puts the power supply back into normal operating mode. Writing a "1" restart. This command will put the PSU into standby mode if the PSU supports FW update in standby mode only. If the power supply image passed to the PSU is corrupt the power supply will stay in firmware upload mode even if the system requested the PSU to exit the FW upload mode. Value: 0 = Exit firmware upload mode 1 = Firmware upload mode
D7h	MFR_FWUPLOAD	-	BW	-	Command used to send each block of the FW image.
D8h	MFR_FWUPLOAD_STATUS	-	R	2	At any time during or after the firmware image upload the system can read this command to determine status of the firmware upload process. All bits get reset to "0" when the power supply enters FW upload mode. Bit 0: "1" full image received Bit 1: "1" full image not received. This remains asserted until the full image is received Bit 2: "1" bad or corrupt image received Bit 3: For future use Bit 4: "1" FW image is not supported and not received Bit 5-15: Reserved

PMBus™ SPECIFICATIONS

The CSU1300AP Series Firmware Update Command List:

Command Code	Command Name	Default Value	Access Type	Data Bytes	Description
D9h	MFR_FW_REVISION	NA	BR	3	Describes revisions of the FW. Block Read with PEC (3 bytes) Byte 0: 0-255 minor revision, secondary Byte 1: 0-255 minor revision, primary Byte 3: 0-255 Bit 7: "1" down grading of PSU FW has to be avoided; "0" no restriction in downgrading the PSU FW. Bit 0-6: Major revision

Note: While the PSU FW image is being updated the PSU will blink the green LED at a 2Hz rate.

PMBus™ SPECIFICATIONS

Firmware Update Process

IMPORTANT!

- PSU may be in standby mode or ON mode during FW update process
- If the FW update process is interrupted at any point during the process; the PSU must always be able to return to the boot loader code.
- The PSU must always check that the application program is not corrupted before starting to run from the application program
- During the FW upload process the PSU must always respond to any communication on the bus; acknowledging its address and the supporting commands without holding the bus. For unsupported boot loader commands the PSU may respond with Not Acknowledge or 00h.
- BMC must configure correct addresses into ME at BMC startup to avoid bad PSU address config if AC power is lost or BMC is reset while the PSU update is in progress

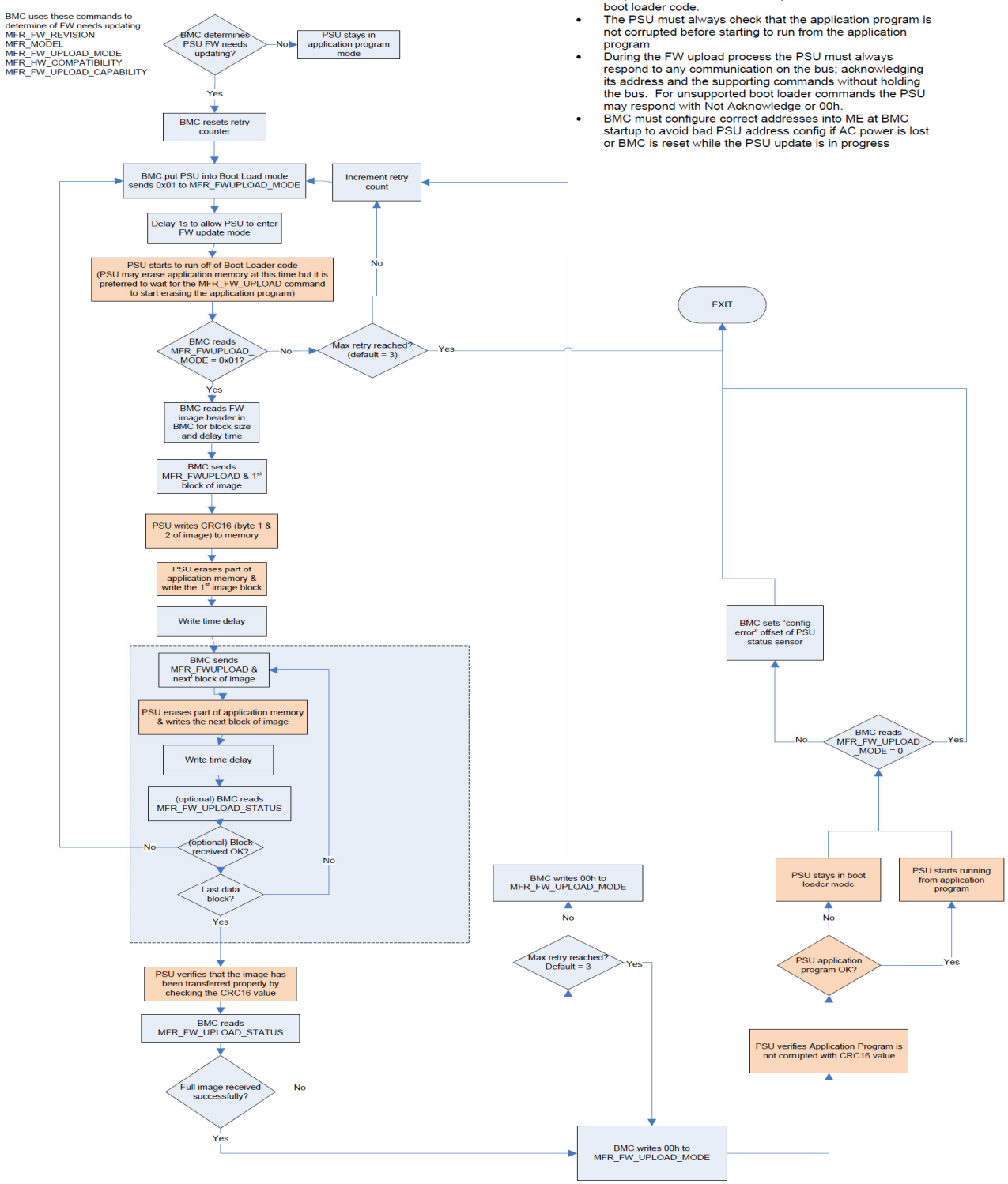

PMBus™ SPECIFICATIONS

PSU Flow During Powering ON

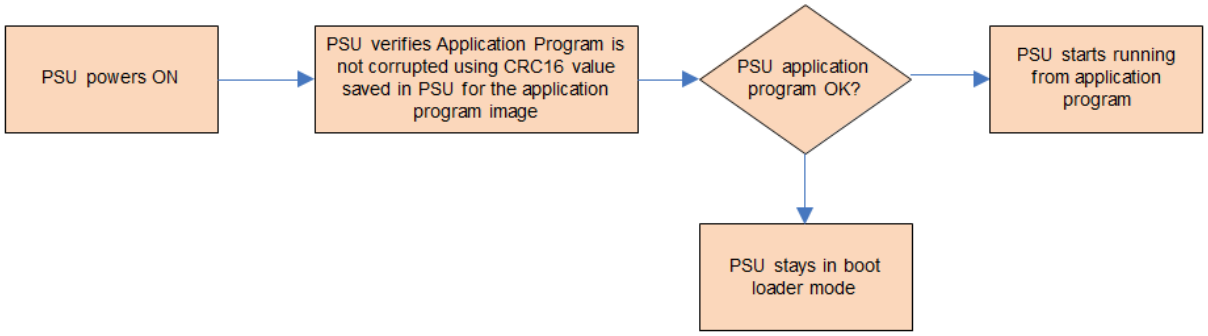

APPLICATION NOTES

Current Sharing

The CSU1300AP series main output V_O is equipped with current sharing capability. This will allow up to 4 power supplies to be connected in parallel for higher power application. Current share accuracy is typically 5% when the load is larger than 20%.

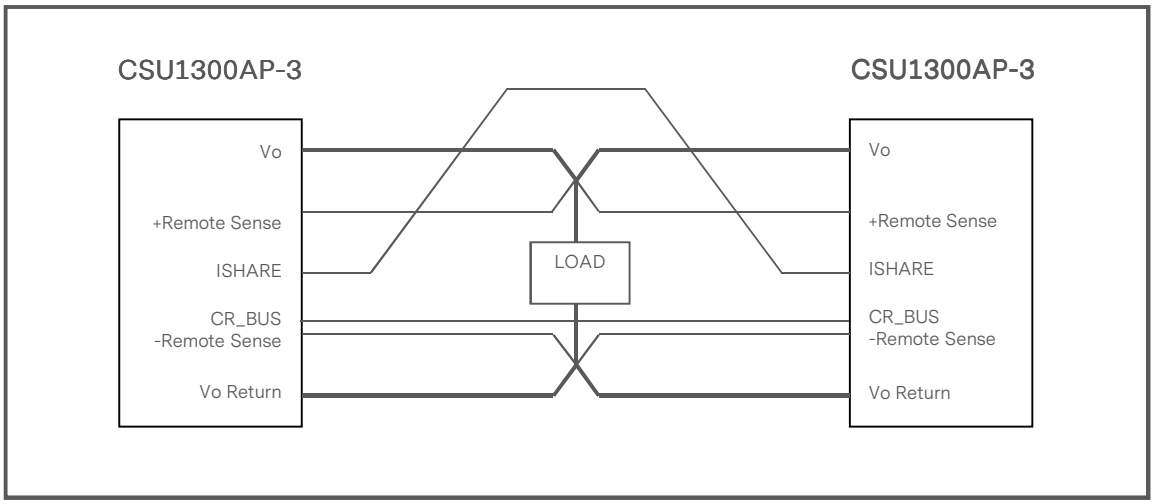

APPLICATION NOTES

Output Ripple and Noise Measurement

The setup outlined in the diagram below has been used for output voltage ripple and noise measurements on the CSU1300AP series. When measuring output ripple and noise, a scope jack in parallel with a 0.1uF ceramic chip capacitor, and a 10uF tantalum capacitor will be used. Oscilloscope can be set to 20MHz bandwidth for this measurement.

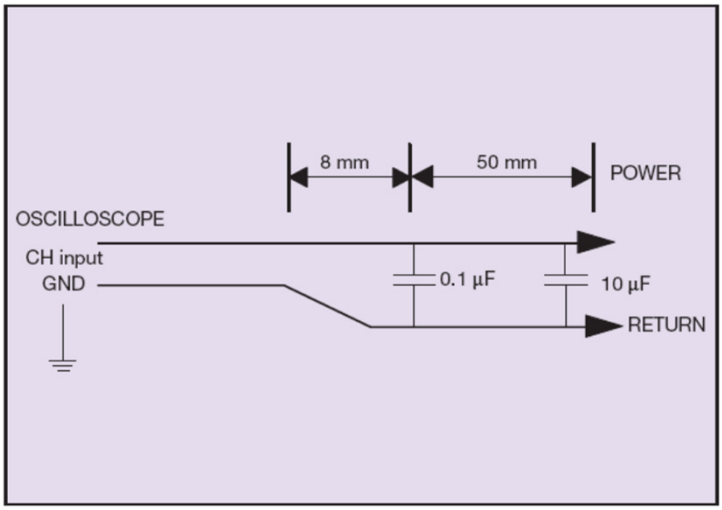

RECORD OF REVISION AND CHANGES

Issue	Date	Description	Originators
1.0	06.20.2020	First Issue	K. Ma
1.1	03.02.2021	Update cover and back cover	C. Liu
1.2	05.27.2021	Add the VIN_GOOD characteristics in the performance curve	A. Zhang
1.3	12.15.2021	Update V_{SB} OCP range, add UKCA mark and some logo pictures	K.Ma
1.4	06.15.2022	Update 00h command	K.Ma
1.5	10.19.2022	Update EN61000-4-11 Criteria	K.Ma

ABOUT ADVANCED ENERGY

Advanced Energy (AE) has devoted more than three decades to perfecting power for its global customers. AE designs and manufactures highly engineered, precision power conversion, measurement and control solutions for mission-critical applications and processes.

Our products enable customer innovation in complex applications for a wide range of industries including semiconductor equipment, industrial, manufacturing, telecommunications, data center computing, and medical. With deep applications know-how and responsive service and support across the globe, we build collaborative partnerships to meet rapid technological developments, propel growth for our customers, and innovate the future of power.

PRECISION | POWER | PERFORMANCE

For international contact information,
visit advancedenergy.com.

powersales@aei.com (Sales Support)
productsupport.ep@aei.com (Technical Support)
+1 888 412 7832

Specifications are subject to change without notice. Not responsible for errors or omissions. ©2020 Advanced Energy Industries, Inc. All rights reserved. Advanced Energy®, and AE® are U.S. trademarks of Advanced Energy Industries, Inc.

CSU1300AP - Rev.10.19.22_#1.5