# Ultra High Performance BGA Cooling Solutions w/ Thermal Tape Attachment



ATS Part#: **ATS-52150G-C1-R0**

Description: maxiFLOW™ Heat Sink, T412, BLUE-ANODIZED

Heat Sink Type: maxiFLOW

Heat Sink Attachment: THERMAL TAPE

Equivalent Part Number: ATS-52150G-C2-R0

*Image above is for illustration purpose only.*

## Features & Benefits

- **maxiFLOW™** design features a low profile, spread fin array that maximizes surface area for more effective convection (air) cooling
- Fabricated from extruded aluminum, which minimizes thermal resistance from the base to the fins, reduces weight and keeps costs low
- Higher performance helps ensure reliable product life at a lower cost than other extruded heat sinks
- Comes pre-assembled with high performance thermal interface material

## Thermal Performance

| AIR VELOCITY | | @200 LFM 1.0 M/S | @300 LFM 1.5 M/S | @400 LFM 2.0 M/S | @500 LFM 2.5 M/S | @600 LFM 3.0 M/S | @700 LFM 3.5 M/S | @800 LFM 4.0 M/S |
|---|---|---|---|---|---|---|---|---|
| THERMAL RESISTANCE | Unducted Flow | 11.70 °C/W | 9.62 °C/W | 8.37 °C/W | 7.52 °C/W | 6.89 °C/W | 6.40 °C/W | 6.01 °C/W |
| | Ducted Flow | 9.40 | n/a | n/a | n/a | n/a | n/a | n/a |

## Product Detail

| Schematic Image | Dimension A | Dimension B | Dimension C | Dimension D | TIM | Finish |
|---|---|---|---|---|---|---|
| | 15.0 mm | 15.0 mm | 12.5 mm | 30.6 mm | T412 | BLUE-ANODIZED |

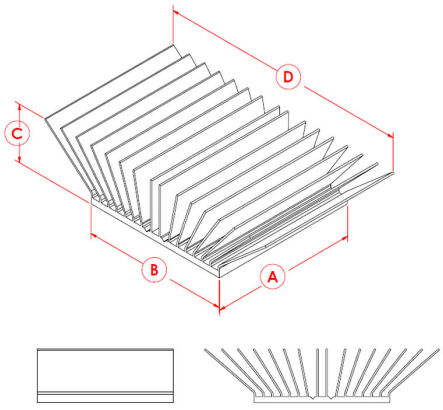


*Image above is for illustration purpose only.*

**Notes:**

- Dimension A and B refer to component size.
- Dimension C is the heat sink height from the bottom of the base to the top of the fin field.
- ATS-52150G-C2-R0 is the exact heat sink assembly with an equivalent thermal interface material (Saint Gobain C675).
- Thermal performance data are provided for reference only. Actual performance may vary by application.
- ATS reserves the right to update or change its products without notice to improve the design or performance.
- ATS certifies that this heat sink assembly is RoHS-6 and REACH compliant.
- Contact ATS to learn about custom options available.

For more information, to find a distributor or to place an order, please contact us at 781-769-2800 (North America), sales@qats.com or www.qats.com.

© 2012 Advanced Thermal Solutions, Inc. | 89-27 Access Road | Norwood MA | 02062 | USA

ATS ADVANCED THERMAL SOLUTIONS, INC. Innovations in Thermal Management®