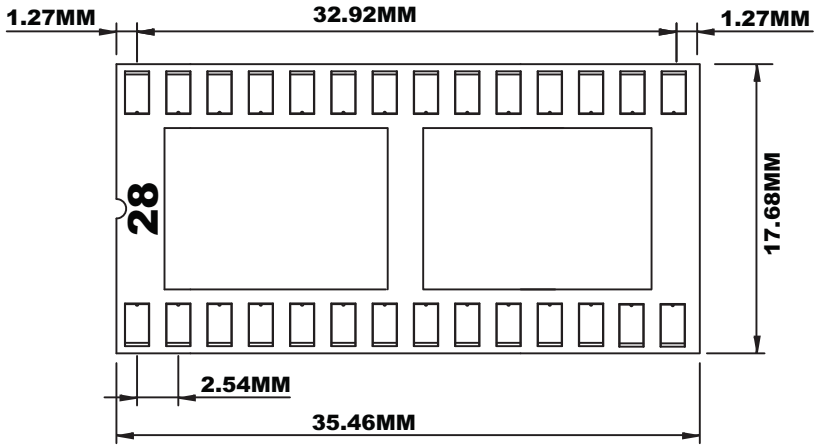

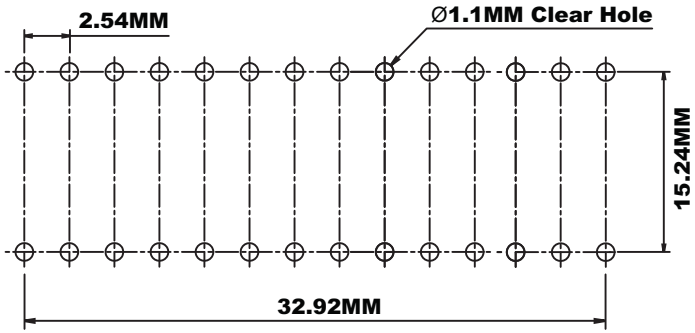

Recommended P.C.B. Layout

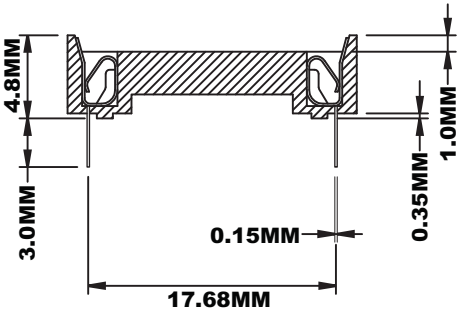

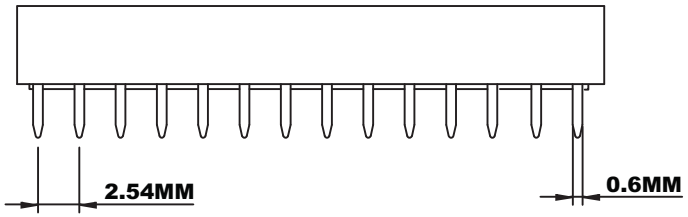

Material:

- Contact Resistance: 30 MΩ Max. @ 100mA DC
- Insulator Resistance: 1,000 MΩ Min. @ 500V DC
- Current Rating: 1 Amp
- Dielectric Withstanding Voltage: 500V AC for 1 minute
- Operating Temperature: -55°C ~ +105°C
- Contact: Phosphor Bronze, Tin Plated
- Housing: PBT & 30% Glass Fiber (UL 94V-0)

RoHS Complaint

Scale	1:1						Name	Item No. A28-LC-TT-R
TOLERANCE						Drawn	11.07.11	Chappell
X.X	±0.40					Approved		Title: Low Cost Version IC Socket, 28 Pin Straight Leg, 15.24MM Pitch
X.XX	±0.25							
X.XXX	±0.15							Drawing No. rev00
Angle	±3°							
			Modification	Date	Name			Replace / Sheet

ASSMANN WSW components