Auf dem Schüffel 1
D-58513 Lüdenscheid
Tel.: +49-2351 - 554-0
Fax +49 (2351) 554-861
info@assmann-wsw.com
www.assmann-wsw.com

Product Change Notification(PCN)

Issue Date: 2019/8/05
Modification / Revision Date: 2019/8/05

AU-Y1005-3

USB3.0 receptacle, DIP type

Change Notification: PCN 20190805 AU-Y1005-3

Description of changes:
1. Dimensions update
2. Draw.-No. ASS_6300_COrev01 substitutes ASS_6300_COrev00

Date of change and Implementation:
Change: Week 32 / 2019
Implementation: 2019/8/05

Key Characteristics of Change: Update dimensions, see page 3

Products Affected: AU-Y1005-3

Reason for Change: Update dimensions

Response : No response to this notification is required.

PCN Revision History:

Date of Revision: 2019/8/05 Revision Number: 00

Auf dem Schüffel 1
D-58513 Lüdenscheid
Tel.: +49-2351 - 554-0
Fax +49 (2351) 554-861
info@assmann-wsw.com
www.assmann-wsw.com

Product Change Notification(PCN)

Issue Date: 2019/8/05
Modification / Revision Date: 2019/8/05

Reference Documents / Attachments:

Document: Drawing

ASSMANN WSW P/N	Drawing Number
AU-Y1005-3	ASS_6300_COrev01

PCN Revision History:

Date of Revision: 2019/8/05 Revision Number: 00

Auf dem Schüffel 1
D-58513 Lüdenscheid
Tel.: +49-2351 - 554-0
Fax +49 (2351) 554-861
info@assmann-wsw.com
www.assmann-wsw.com

Product Change Notification(PCN)

Issue Date: 2019/8/05
Modification / Revision Date: 2019/8/05

AU-Y1005-3 Old version	AU-Y1005-3 New version
1. Dimensions 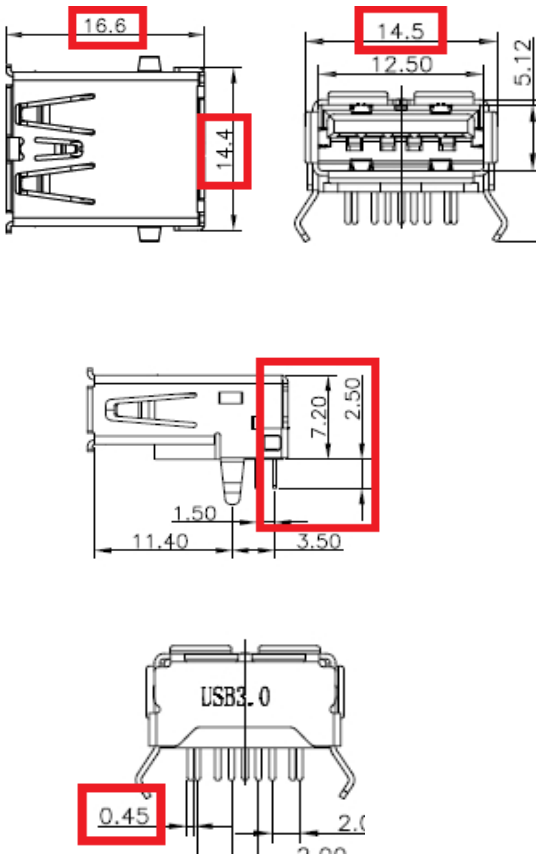	**1. Dimensions** 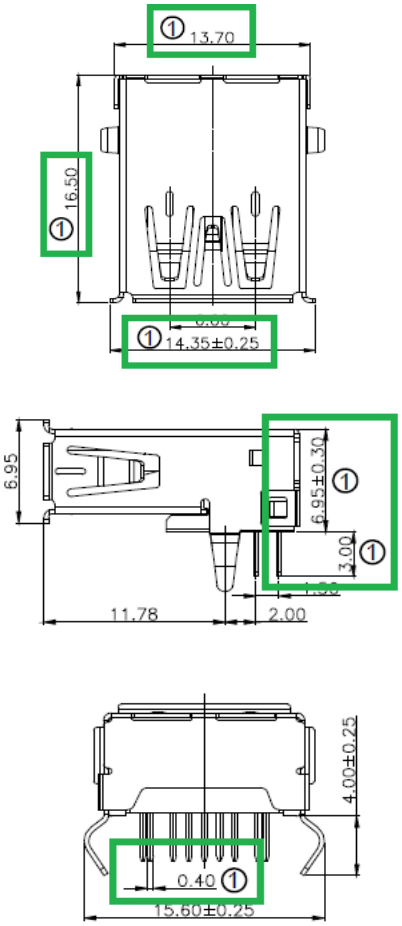
For detail, please take attached new drawing: ASS_6300_COrev01 for reference	

PCN Revision History:

Date of Revision: 2019/8/05 Revision Number: 00

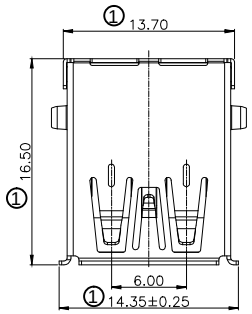

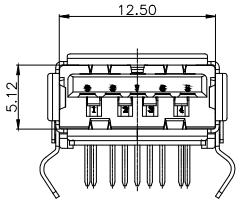

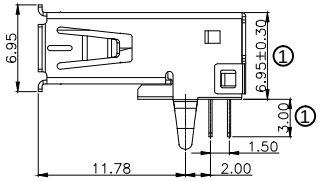

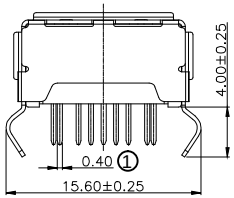

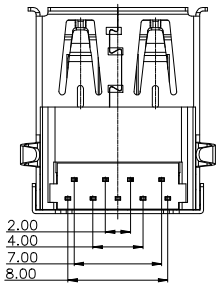

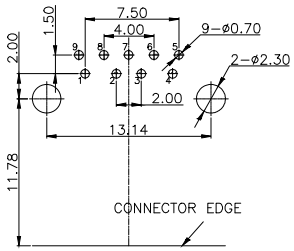

REFERENCE PCB LAYOUT

NOTES:
1.MATERIAL:
1.1 HOUSING: PBT+30%G.F UL94V−0,BLUE COLOR.
1.2 4PIN CONTACT: PHOSPHOR BRONZE.
1.3 5PIN CONTACT: BRASS.
1.4 SHELL: BRASS
2.FINISH:
2.1 CONTACT:
CONTACT AREA:15u"MIN Au PLATED
SOLDER AREA: 100u"MIN TIN PLATED
UNDER PLATE: 50u"MIN NI PLATED
2.2 SHELL: 80u"MIN NI PLATED
3. MECHANICAL:
3.1 MATING FORCE: 3.57kgf MAX.
3.2 UNMATING FORCE: 1.02kgf MIN
3.3 DURABILITY: 1500 CYCLES MIN
4. ELECTRICAL:
4.1 CURRENT RATING:1.0A.
4.2 DIELECTRIC STRENGTH: 500V AC FOR 1MINUTE.
4.3 CONTACT RESISTANCE: 30mΩ MAX.
4.4 INSULATION RESISTANCE: 100MΩ MIN
5. OPERATING TEMPERATURE: −55°C TO +85°C.

RoHS compliant

Scale	Free	
TOLERANCE		
①	.X	±0.38
①	.XX	±0.25
	.XXX	±0.10
DIM	TOL	
	X.°	±5°
Angle	TOL	
UNIT	mm	

Id.	Modification	Date	Name
①	Update dimension and tolerance	30.07.2019	Xavier
⓪	Drawn	18.02.2014	Ray

	Date	Name
Drawn	18.02.2014	Ray
Approved	18.02.2014	Ray

ASSMANN WSW components

Customer-No.

ASSMANN WSW-No.
AU-Y1005-3

Drawing-No.
ASS 6300 CO

rev01

Replace

SHEET
1/1