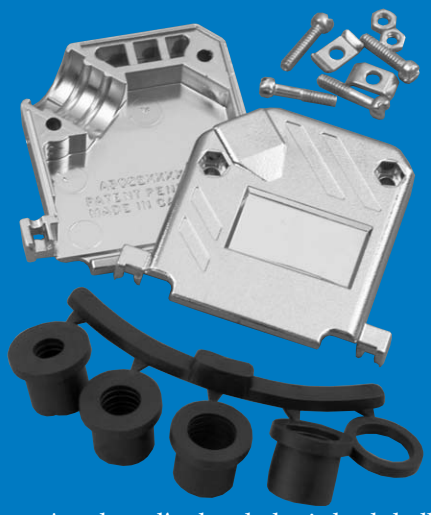

Amphenol's plated plastic backshell accommodates most standard and high-density D-Subminiature connectors and is appropriate for cable assemblies requiring compliance to FCC 20780. This version is highly durable and provides EMI/RFI protection. The rubber grommet compression insert forces the cable's shielding against the inside of the cable exit area, assuring shielding. The 45° cable exit helps save space behind equipment.

45° Plated Plastic Backshell

SPECIFICATIONS:

Housing Material:	ABS Polymer
Plating:	Nickel over copper
Grommet Material:	PVC (UL 94 VO)
Mounting Hardware:	Steel, clear zinc finish

ASSEMBLY INSTRUCTIONS

1. *Select the tightest insert that will fit over the cable and thread the cable through it, placing the end with the smaller O.D. (the end without the washer) towards the connector.*
2. *Cut the jacket, fold the shielding back over the outside of the insert and cut it just short of the washer.*
3. *Install jackscrews and connector.*
4. *Place the washer in the outermost depression in the exit area of the hood and screw the cover closed.*

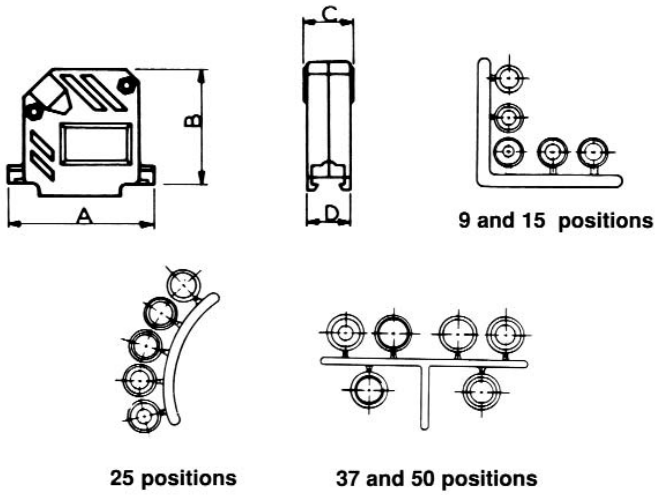

DIMENSIONS AND ORDERING INFORMATION

Shell Size	Standard # of Contacts	Hi-Density # of Contacts	Part #	Dimensions						Cable Diameter Range	
				A	B	C	D	E	F	Minimum	Maximum
E	9	15	17E-1824-2	1.217 (30.91)	1.430 (36.32)	0.640 (16.26)	0.640 (16.26)	0.400 (10.16)	0.984 (24.99)	0.210 (5.33)	0.320 (8.13)
A	15	26	17E-1825-2	1.545 (39.24)	1.568 (39.83)	0.640 (16.26)	0.640 (16.26)	0.400 (10.16)	1.312 (33.32)	0.210 (5.33)	0.320 (8.13)
B	25	44	17E-1826-2	2.090 (53.09)	1.735 (44.07)	0.710 (18.03)	0.640 (16.26)	0.522 (13.26)	1.857 (47.17)	0.230 (5.84)	0.450 (11.43)
C	37	62	17E-1827-2	2.734 (69.44)	1.976 (50.19)	0.906 (23.01)	0.640 (16.26)	0.726 (18.44)	2.500 (63.5)	0.350 (8.89)	0.650 (16.51)