JTL07R — crimp

jam nut receptacle
(miniature jam nut mounting dimensions)

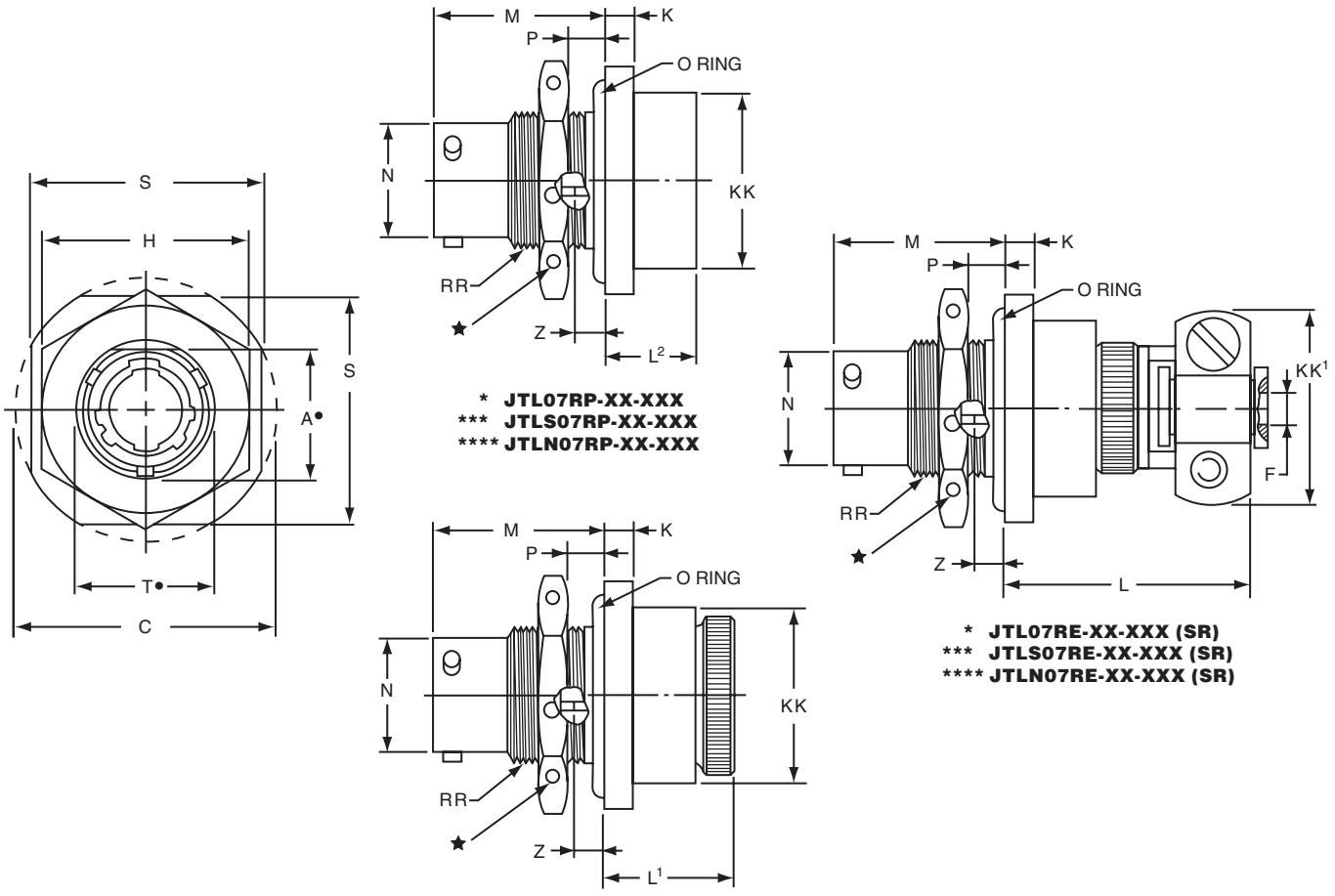

★ .059 Dia. Min. 3 lockwire holes.
Formed lockwire hole design (6 holes) is optional.

• "D" shaped mounting hole dimensions.

* To complete order number see page 49.

*** High temperature version; to complete order number see page 49.

**** Clear iridite finish (gold color), N_2O_4 resistant; to complete order number see page 49.

Shell Size	A• +.000 –.010	C Max.	F Dia. +.010 –.025	H Hex +.017 –.016	K +.011 –.010	L Max.	L¹ Max.	L² Max.	M ±.005	N Dia. +.001 –.005	P Panel Thickness Min.	P Panel Thickness Max.	S ±.016	T• +.010 –.000	Z ±.026	KK Dia. Max.	KK¹ Max.	RR Thread Class 2A
8	.542	1.077	.125	.750	.125	1.062	.641	.375	.630	.473	.062	.125	.938	.572	.047	.688	.812	.5625-24UNEF
10	.669	1.203	.188	.875	.125	1.062	.641	.375	.630	.590	.062	.125	1.062	.697	.047	.812	.875	.6875-24UNEF
12	.830	1.390	.312	1.062	.125	1.062	.641	.375	.630	.750	.062	.125	1.250	.844	.047	.938	1.000	.8750-20UNEF
14	.955	1.515	.375	1.188	.125	1.062	.641	.375	.630	.875	.062	.125	1.375	1.007	.047	1.062	1.125	1.0000-20UNEF
16	1.084	1.640	.500	1.312	.125	1.062	.641	.375	.630	1.000	.062	.125	1.500	1.134	.047	1.188	1.188	1.1250-18UNEF
18	1.208	1.765	.625	1.438	.125	1.062	.641	.375	.630	1.125	.062	.125	1.625	1.259	.047	1.312	1.438	1.2500-18UNEF
20	1.333	1.953	.625	1.562	.156	1.062	.703	.328	.755	1.250	.062	.250	1.812	1.384	.172	1.469	1.438	1.3750-18UNEF
22	1.459	2.075	.750	1.688	.156	1.062	.703	.328	.755	1.375	.062	.250	1.938	1.507	.172	1.594	1.625	1.5000-18UNEF
24	1.575	2.203	.800	1.812	.156	1.062	.703	.328	.755	1.500	.062	.250	2.062	1.634	.172	1.719	1.719	1.6250-18UNEF

All dimensions for reference only.