Copying of this document and giving it to others and the use or communication of the contents thereof, are forbidden without express authority. Offenders are liable to the payment of damages. All rights are reserved in the event of the grant of a patent or the registration of the utility model or design

INDUSTRIAL@AMPHENOL
TRUSTED GLOBALLY

Characteristics

General Characteristics	Standard	Value
number of contacts		72 + PE
termination technique		crimp
wire gauge		0,14mm² - 2,5mm² AWG26 - AWG14
max. insulation diameter		3,7mm
Electrical Characteristics	**Standard**	**Value**
rated voltage	IEC 60664-1	250V (UL/CSA: 600V)
pollution degree	IEC 60664-1	3
installation (overvoltage) category	IEC 60664-1	3
material group	IEC 60664-1	3b
rated impulse withstand voltage	IEC 60664-1	4kV
rated current T_{amb} = 40 °C		10A
current carrying capacity	IEC 60512-5-2	see derating curve
contact resistance	IEC 60512-2-1	≤ 5mΩ
insulation resistance	IEC 60512-3-1	≥ 10^{10}Ω
Climatical Characteristics	**Standard**	**Value**
climatic category	IEC 60068-1	40 / 125 / 21
upper temperature	IEC 60512-11-9	+125°C
lower temperature	IEC 60512-11-10	-40°C
Mechanical Characteristics	**Standard**	**Value**
mechanical operation	IEC 60512-9-1	≥500 mating cycles
Materials	**Standard**	**Value**
insert		PC-GF
color		grey
flammability	UL 94	V0
protective earth contacts		CuZn (brass)
protective earth contacts plating		Ni-plated

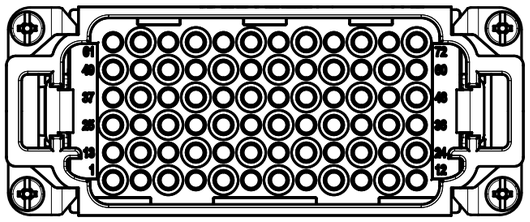

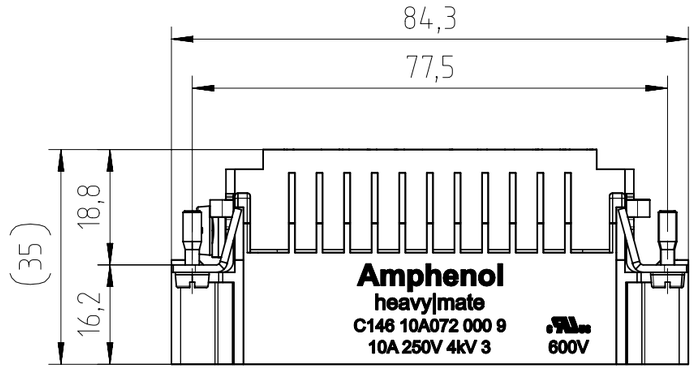

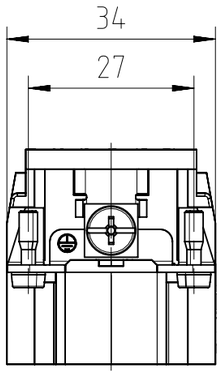

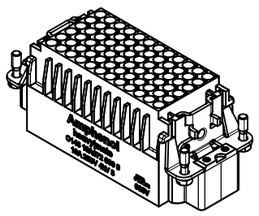

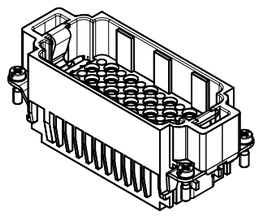

Alle technischen Daten wurden unter Laborbedingungen ermittelt und können im Praxisbetrieb abweichen.
Es handelt sich bei den Angaben weder um Beschaffenheits- noch um Haltbarkeitsgarantien.
All technical data have been measured in a laboratory environment and can be different during practical usage of the product. Any product information is for descriptive usage only and not legally binding, particulary the information does not constitute or provide any legal guarantees ("Beschaffenheitsgarantie" or "Haltbarkeitsgarantie").

Index	Änderung / Description	Datum / Date	Name
07	202000338	24.08.2020	PWÖLF
06	201900214	27.05.2019	PWÖLF
05	201700119	02.05.2017	MTOLK
04	201600106	23.02.2016	JHÖNN
03	201500015	09.09.2015	JHÖNN

Gewicht (errechnet) / *Calc WT*: 66,4 g
Prüfmaß / *Testdimension*
Teileindex / *Partindexnumber:*
Bagatelle change:

Zul. Abw. / *Tolerances*: ISO 2768-m
DIN / ISO 13715

Gez. 09.09.2015
Drawn JHOENNIGE2
Status Released
Gepr. 16.09.2020
Checked MBERTSCH

Amphenol Tuchel Industrial GmbH

Maßstab / *Scale*: 1:1 (1:2) | A3

CUSTOMER DRAWING

Stifteinsatz 72-Pol + PE
pin insert 72 pole + PE

M C146 10A072 000 9

Blatt / *Sheet* 1 | 1 Bl.

Ers. f. / *Replacement for*: M-C146 10A072 000 9 Rev04

NXM-V05 FAI2020-003305

Weitergabe sowie Vervielfältigung dieser Unterlage, Verwertung und Mitteilung ihres Inhalts nicht gestattet, soweit nicht ausdrücklich zugestanden. Zuwiderhandlungen verpflichten zu Schadenersatz. Alle Rechte für den Fall der Patenterteilung oder Gebrauchsmuster-Eintragung vorbehalten