REV.	ECN NO.	DATE	SIGN	DESCRIPTION

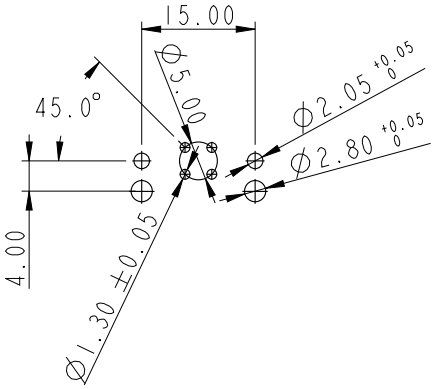

Recommended PCB Layout

ALTW
CONFIDENTIAL
2016-11-10
R&D DEPT.

ALTW
DCC. DEPT.
CONFIDENTIAL
2016.11.14
ISSUED

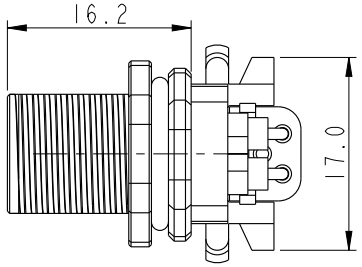

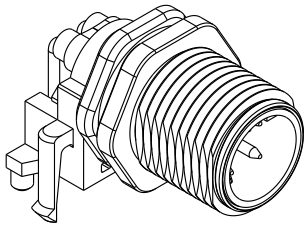

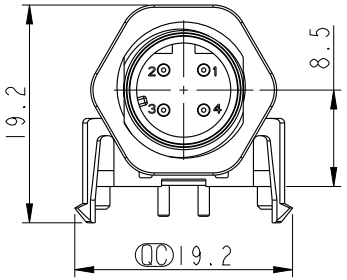

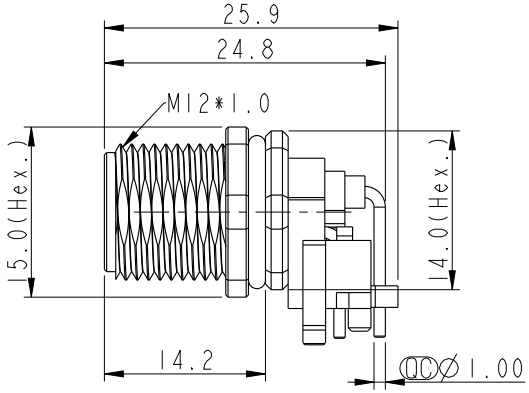

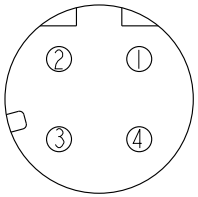

Conn.
Pin Assignments
Front View

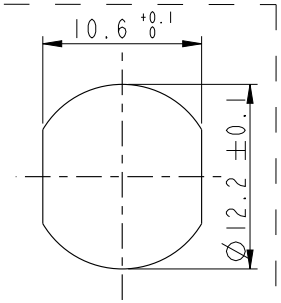

Recommended
Panel Cut-Out

Note:
* QC Important Dimension To Check.
* Waterproof Rating: IP67(Mated Waterproof)
* Connector: PBT+PC, Black.
* Male Pins: Copper Alloy, Gold Plated.
* Shell: Zinc Alloy, Nickel Plated.
* Nut: Zinc Alloy, Nickel Plated.
* O-Ring1: Silicone, Black.
* O-Ring2: Silicone, Gray.
* Pin Holder: PBT+PC, Black.
* For Panel Thickness Max. 3.0mm.
* For PCB Thickness Max. 1.5mm.

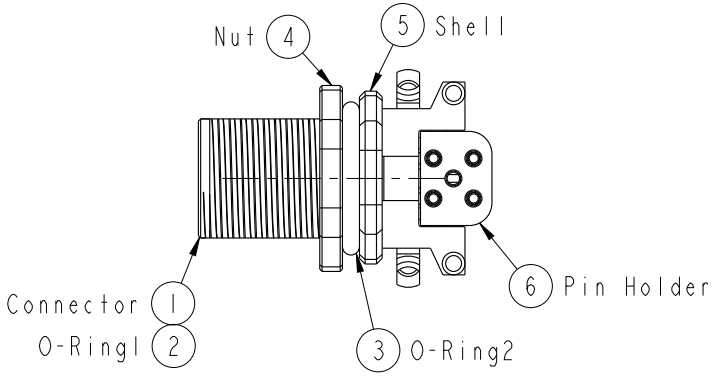

UNIT: mm

TOLERANCE
.X ±0.25
.XX ±0.1
.XXX ±0.05
ANGLES ±1°

TITLE: M12 DCODE 90° PANEL 4PIN MCONN MPIN

SCALE 3:2 | SIZE A4 | SHEET 1 OF 1
REV. A | WC-REV. A.1 | QC: Inspection item

Amphenol LTW
安費諾亮泰企業股份有限公司

ITEM NO: M12D-04PMMR-SF7003	DRAWN BY: Yulong_wang	DATE: 2016-11-10
DWG NO: M12D-04PMMR-SF7003	CHECKED BY: Jinhai	DATE: 2016-11-10
CUSTOMER: ALTW	APPROVED BY: Jerry	DATE: 2016-11-10

FMW10702-01-02A1

THIS DOCUMENT IS SUBJECT TO CHANGE WITHOUT NOTICE. IT IS CONFIDENTIAL AND A PROPERTY OF Amphenol LTW. DISCLOSURE TO THIRD PARTY HAS TO BE AUTHORIZED BY Amphenol LTW.