REV.	ECN NO.	DATE	SIGN	DESCRIPTION
B		2007/04/23	J.Espiritu	Change Precision Of Dimension 18.00 To 18.0 And Apply New Format
C	LEN-8B0540	2008/09/22	Shin	Add Note
D	LEN15A0325	2015/06/03	Jinhai	Change Logo

ALTW CONFIDENTIAL 2015-06-03 R&D DEPT.

ALTW DCC. DEPT. CONFIDENTIAL 2015.10.26 ISSUED

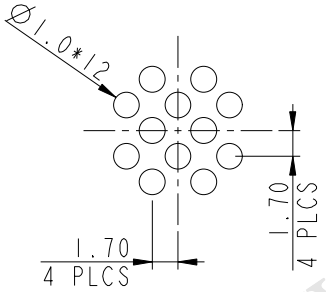

PCB Lay-out

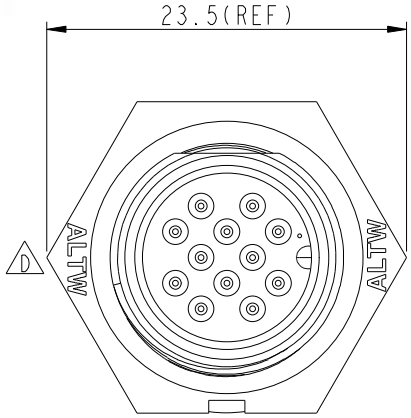

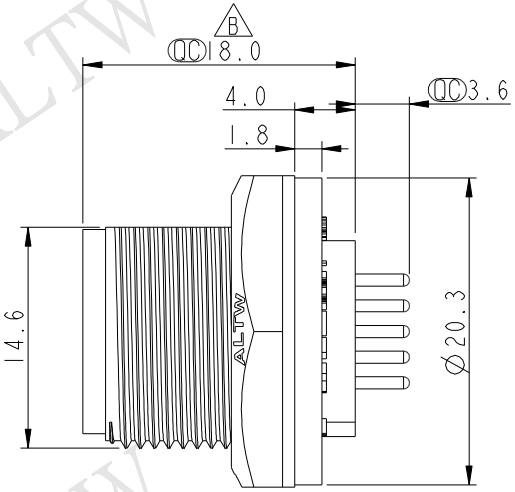

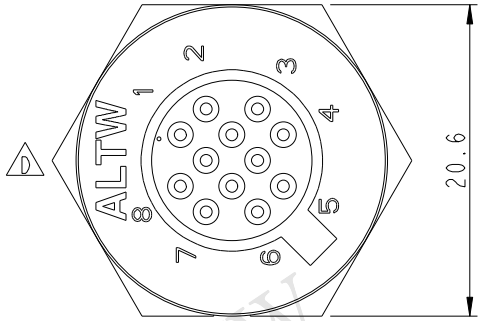

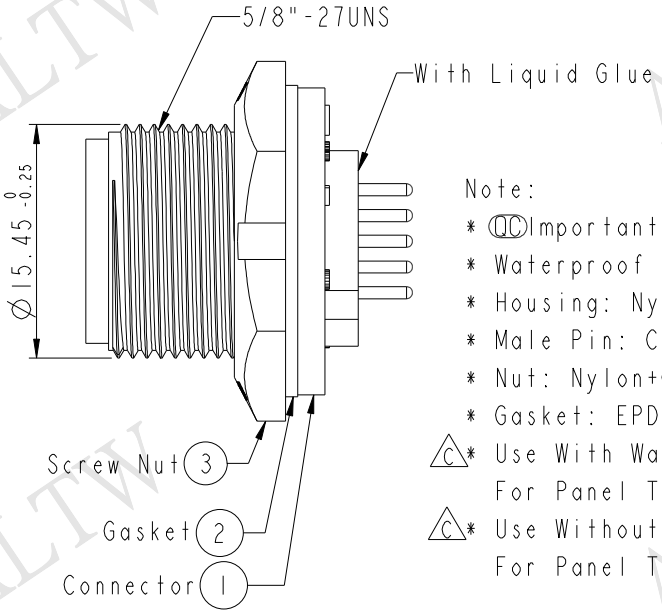

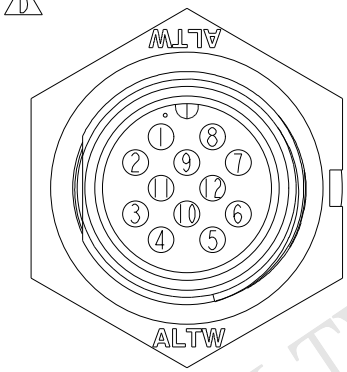

Pin Assignments
Front View

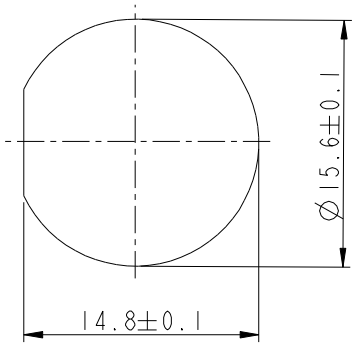

Recommended Panel Cut-out

Note:
* QC Important Dimension To Check.
* Waterproof Rate: IP67
* Housing: Nylon+GF, Black
* Male Pin: Copper Alloy, Gold Plated
* Nut: Nylon+GF, Black
* Gasket: EPDM, Black
C * Use With Waterproof Cap Or Dust Cap For Panel Thickness Max: 3.0mm
C * Use Without Waterproof Cap Or Dust Cap For Panel Thickness Max: 4.0mm

UNIT: mm

TOLERANCE
.X ±0.25
.XX ±0.1
.XXX ±0.05
ANGLES ±1°

TITLE: Standard Panel Screw 12Pin M Conn. M Pin

SCALE 2:1 | SIZE A4 | SHEET 1 OF 1
REV. D | WC-REV. .0 | QC: Inspection item

Amphenol LTW
安費諾亮泰企業股份有限公司

ITEM NO	DRAWN BY	DATE
BU-12PMMP-SC7001	Jinhai	2015-06-03
DWG NO: BU-12PMMP-SC7001	CHECKED BY: Tom	DATE: 2015-06-03
CUSTOMER: ALTW	APPROVED BY: Jerry	DATE: 2015-06-03

FMW10702-01-02A1

THIS DOCUMENT IS SUBJECT TO CHANGE WITHOUT NOTICE. IT IS CONFIDENTIAL AND A PROPERTY OF Amphenol LTW. DISCLOSURE TO THIRD PARTY HAS TO BE AUTHORIZED BY Amphenol LTW.