NOTES:

1. MATERIALS AND FINISHES:
   BODY - BRASS, WHITE BRONZE PLATING
   CONTACT-OUTER - PHOSPHOR BRONZE, SILVER PLATING
   CONTACT - BeCu, SILVER PLATING
   INSULATOR - PTFE, NATURAL
   O-RING - SILICONE RUBBER, RED

2. ELECTRICAL:
   A. IMPEDANCE: 50 OHM
   B. FREQUENCY RANGE: DC - 6 GHz
   C. VSWR: 1.08 MAX.@ DC -3 GHz
   D. INSERTION LOSS: 0.05XSQRT[F(GHz)]dB MAX.
   E. VOLTAGE RATING: 500 VRMS
   F. DIELECTRIC WITHSTANDING VOLTAGE: 2500 VRMS MIN.
   G. INSULATION RESISTANCE: 5000 MΩ MIN.
   H. INTERMODULATION 3RD ORDER: -166 dBc MAX. (2 X 43 dBm)

3. MECHANICAL:
   A. DURABILITY: 500 CYCLES MIN.
   B. TEMPERATURE RANGE: -65° C TO +165° C
   C. COMPATIBLE WITH ALL STANDARD 4.3/10 PLUGS

4. PACKAGING:
   A. QUANTITY: PACK 10PCS/TRAY
   B. MARKING: BAG TO BE MARKED
      "AMPHENOL RF, 431-127J-52S, AND DATE CODE"

THIRD ANGLE PROJ.

REVISIONS				
REV	DESCRIPTION	DATE	ECO	APPR
A	RELEASE TO MFG.	18-Aug-16	01321	KCE

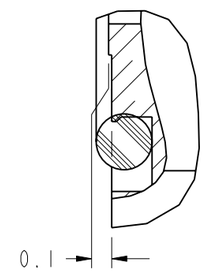

DETAIL A
SCALE 5.200

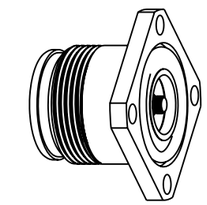

SCALE 1.000

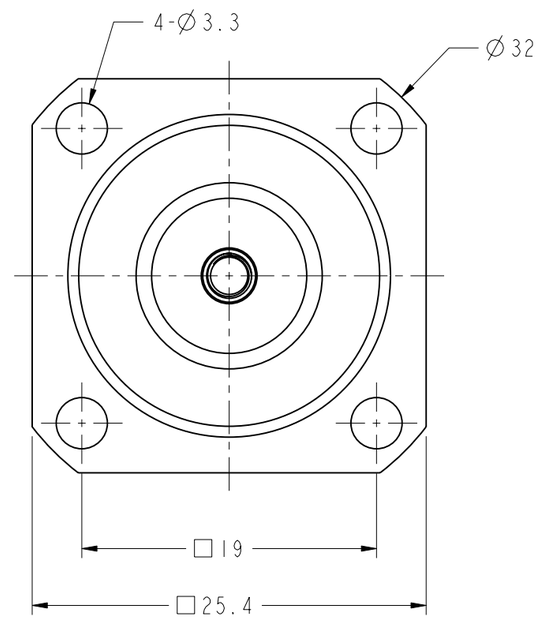

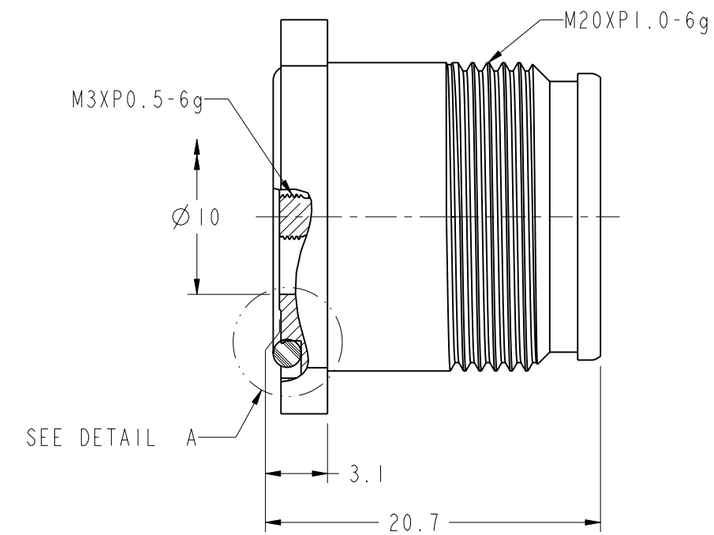

CUSTOMER OUTLINE DRAWING

ALL OTHER SHEETS ARE FOR INTERNAL USE ONLY

UNLESS OTHERWISE SPECIFIED, DIMENSIONS ARE IN METRIC AND TOLERANCES ARE:

<0.5mm	0.5 - 6mm	6 - 30mm	30 - 120mm	ANGLES
± 0.05mm	±0.1mm	±0.2mm	± 0.3mm	±1°

NOTICE - These drawings, specifications, or other data (1) are, and remain the property of Amphenol corp. (2) must be returned upon requiest; and (3) are confidential and not to be disclosed to any person other than those to whom they are given by Amphenol Corp. the funishing of these drawings, specifications, or other data by Amphenol Corp., or to any other person to anyone for any purpose is not to be regarded by implicatioin or otherwise in any manner licensing, granting rights to permitting such holder or any other sperson to manufacture, use or sell any product, process or design, patented or otherwsie, that may in any way be related to or disclosed by said drawings, specifications, or other data.

MATERIAL

REFERENCE
EAR # 6645

FINISH

DRAWN STAR	DATE 18-Aug-16	
ENGINEER SUNDE	DATE 18-Aug-16	
APPROVED S.HSIEH	DATE 18-Aug-16	
CAD FILE		

TITLE
4.3-10 PANEL JACK

SCALE: 2.6:1.0 | SHEET 2 OF 2

DWG SIZE B | REV A

Amphenol RF
www.amphenolrf.com

DRAWING NO. 43106551A8-002-ATS-50
ITEM NO. 886551AANA1AB5F
PART NO. 431-127J-52S