| DRW NO. | SH | REV |
|---|---|---|
| C-968-4200-500 | 1 | B |

| ZONE | REV | SCR NUMBER | DESCRIPTION | BY | DATE | APPROVED |
|---|---|---|---|---|---|---|
| ALL | A | MHAN-9MZHHS.VER01 | NEW RELEASE | HCL-NN | 08/21/2014 | M.HANRAHAN |
| | B | LCUN-9NZKE5.VER01 | ADDED 968-4200-A1K TO TABLE 1 | HCL-VR | 09/23/2014 | L.CURRAN |

**TABLE 1**

| PART NUMBER | PLATING |
|---|---|
| 968-4200-A1D | NI SULFAMATE. STANDARD GOLD. LEADFREE |
| 968-4200-A1E | NI SULFAMATE. HIGH GOLD. LEADFREE |
| 968-4200-A1H | NANO NI. STANDARD GOLD. LEADFREE |
| 968-4200-A1J | NANO NI. HIGH GOLD. LEADFREE |
| 968-4200-A1K | NI SULFAMATE. HIGH GOLD. LEADED. 60-40 TIN-LEAD |

**TABLE 2 (8)**

| CONFIGURATION | DIM L | DIM R |
|---|---|---|
| OPEN | 3.12 | 5.88 |
| LEFT POLARIZED | 3.12 | 13.08 |
| RIGHT POLARIZED | 10.32 | 5.88 |
| LEFT WALL | 3.12 | 7.68 |
| RIGHT WALL | 4.92 | 5.88 |
| TWO WALL | 4.92 | 7.68 |

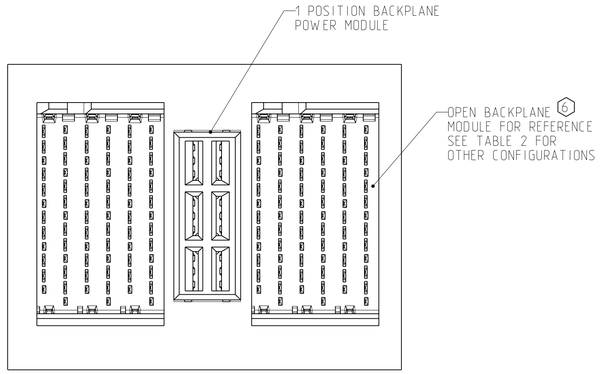


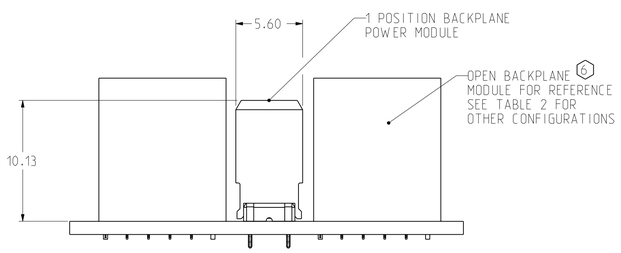


**POWER ASSEMBLED WITH XCede HD SIGNAL MODULE (6)(8)**

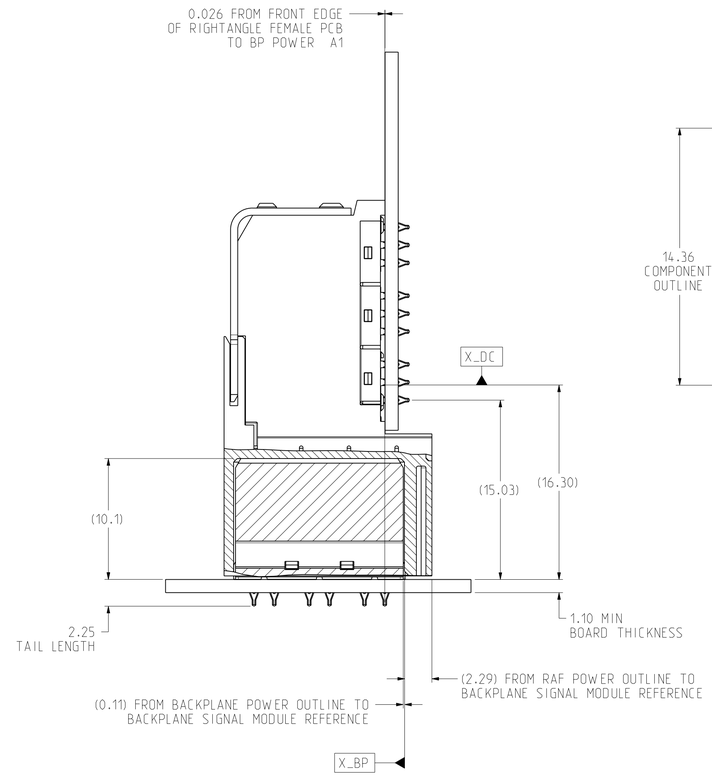


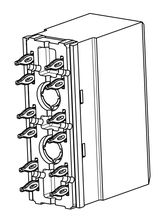

**ISOMETRIC VIEW**
SCALE 4/1

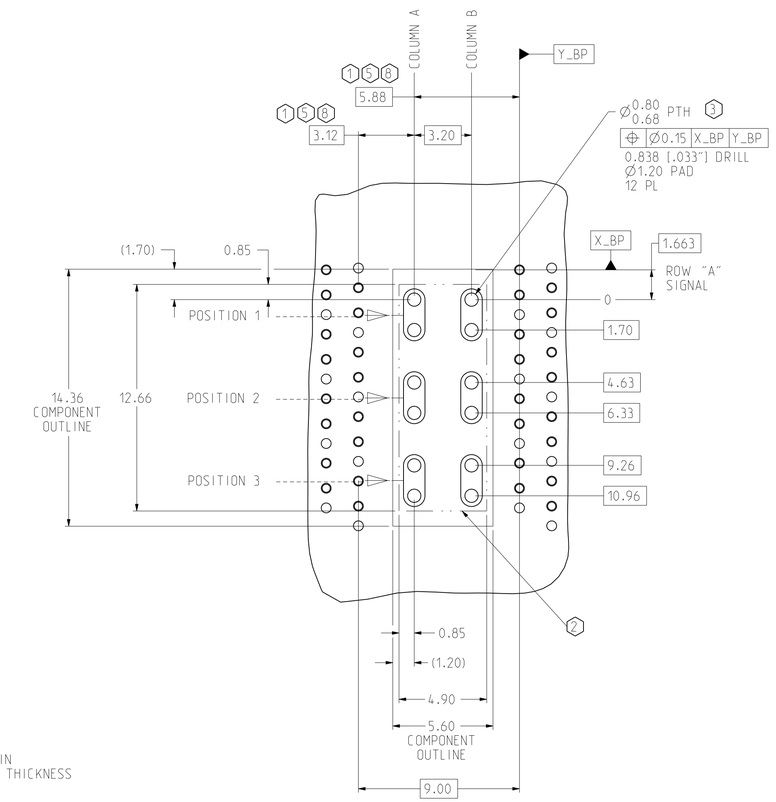


**RECOMMENDED BACKPLANE POWER 1 POSITION HOLE PATTERN**
**SCALE 6/1**

**STANDARD XCede HD**

NOTES

1. FOR EACH ADDITIONAL POWER MODULE. ADD 7.20mm
2. NO SURFACE TRACES IN KEEP OUT ZONE.
3. STATED PAD SIZE MAY REQUIRE FILLETING. SEE TB-2237 FOR ROUTING GUIDELINES.
4. REFER TO TB-2235 FOR XCede HD PRODUCT SPECIFICATIONS.
5. WHEN USING ENDCAPS BETWEEN SIGNAL WAFERS AND DC POWER MODULES ADD 1.80mm FOR EACH ENDCAP. VIEW SHOWN WITHOUT ENDCAPS. FOR ENDCAPS THAT ARE USED BETWEEN DC POWER MODULES AND DO NOT PLUG INTO A MULTI-UP BP POWER MODULE. ADD 1.80mm FOR EACH ENDCAP.
6. REFER TO BACKPLANE CUSTOMER USE DRAWINGS FOR ROW AND COLUMN ASSIGNMENTS.
7. BLADE POSITION A# CONTAINS PINS A#_1 AND A#_2.
8. SEE TABLE 2 FOR XCede HD AND TABLE 3 FOR XCede HD PLUS FOR OFFSET DIMENSION FOR ADJACENT SIGNAL COLUMN OF ALL CONFIGURATIONS.

| TOLERANCES | |
|---|---|
| 0.0 | ±0.25 |
| 0.00 | ±0.13 |
| 0.000 | ± - |
| ANGLES | ± 3° |

UNLESS OTHERWISE SPECIFIED DIMENSIONS ARE IN MM. DECIMAL MARKER IS A PERIOD

DESIGN 04/24/2014 M.HANRAHAN
DRAWN 04/24/2014 HCL-AS
CHK 04/24/2014 M.HANRAHAN
APVD 04/24/2014 M.HANRAHAN

INTERPRET PER ASME Y14.5M

CODE IDENT 31413

CUSTOMER USE DRAWING

**Amphenol TCS**
A Division of Amphenol Corporation
200 Innovative Way, Nashua, NH 03062 603.879.3000

TITLE BACKPLANE POWER ASSEMBLY
XCede HD 4 PAIR, GEN 2 MINI COMPLIANT

PART NO. SEE TABLE 1 — REV N/A
DRAWING NO. C-968-4200-500 — REV B
ASSEM: Q1151-CU-HD-4PR-BP-G2-MINI-PWR — 0.5
DRAWING: C968-4200-500 — 0.13
SIZE D — SCALE 4/1 — SHEET 1 OF 2

DRW NO. C-968-4200-500 SH 1 REV B

| ZONE | REV | SCR NUMBER | DESCRIPTION | BY | DATE | APPROVED |
|---|---|---|---|---|---|---|
| | | | SEE SHEET 1 | | | |

| TABLE 3 (8) | | |
|---|---|---|
| CONFIGURATION | DIM L | DIM R |
| OPEN | 3.12 | 7.68 |
| LEFT POLARIZED | 3.12 | 14.88 |
| RIGHT POLARIZED | 10.32 | 7.68 |
| LEFT WALL | 3.12 | 9.48 |
| RIGHT WALL | 4.92 | 7.68 |
| TWO WALL | 4.92 | 9.48 |

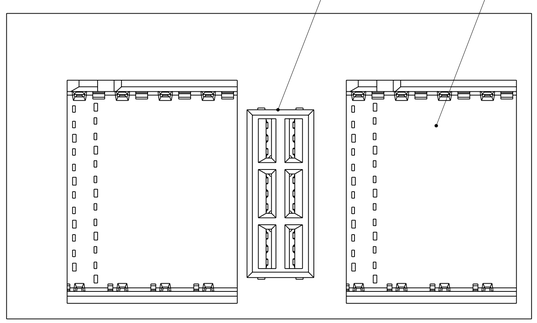


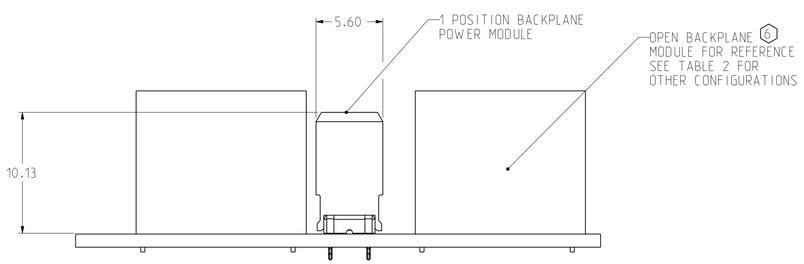


POWER ASSEMBLED WITH XCede HD PLUS SIGNAL MODULE (6) (8)

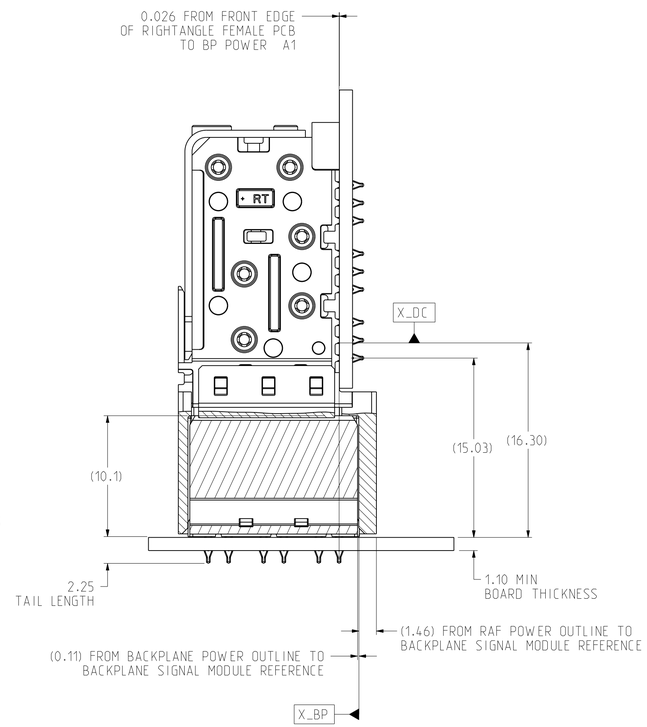


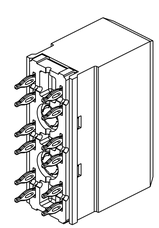

ISOMETRIC VIEW
SCALE 4/1

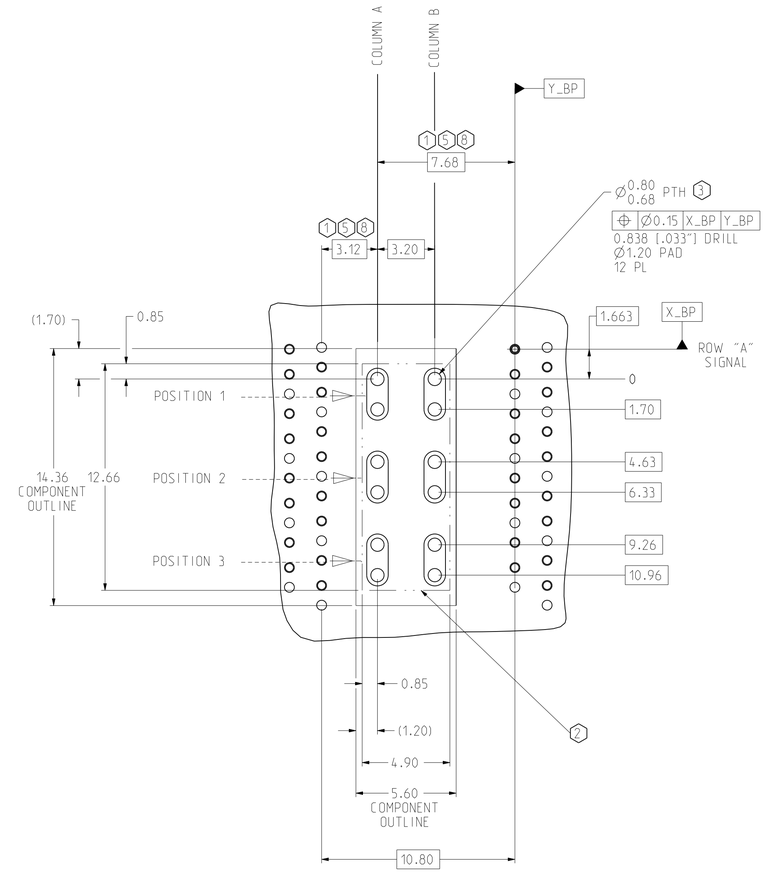


RECOMMENDED BACKPLANE POWER 1 POSITION HOLE PATTERN
SCALE 6/1

XCede HD PLUS

| TOLERANCES | |
|---|---|
| 0.0 | ±0.25 |
| 0.00 | ±0.13 |
| 0.000 | ± - |
| ANGLES | ± 3° |

DESIGN 04/24/2014 M.HANRAHAN
DRAWN 04/24/2014 HCL-AS
CHK 04/24/2014 M.HANRAHAN
APVD 04/24/2014 M.HANRAHAN

UNLESS OTHERWISE SPECIFIED DIMENSIONS ARE IN MM. DECIMAL MARKER IS A PERIOD

INTERPRET PER ASME Y14.5M

CODE IDENT 31413

CUSTOMER USE DRAWING

**Amphenol TCS**
A Division of Amphenol Corporation
200 Innovative Way, Nashua, NH 03062 603.879.3000

TITLE BACKPLANE POWER ASSEMBLY
XCede HD PLUS 4 PAIR, GEN 2 MINI COMPLIANT

PART NO. SEE TABLE 1 REV N/A

DRAWING NO. C-968-4200-500 REV B

ASSEM: Q1226-CU-HD-4PR-BP-G2-MINI-PWR 0.1
DRAWING: C968-4200-500 0.13

SIZE D SCALE 4/1 SHEET 2 OF 2