ZONE	REV	SCR NUMBER	DESCRIPTION	BY	DATE	APPROVED
ALL	A	CWAG-9B27WG.VER01	NEW RELEASE	HCL-PG	09/17/2013	C.WANG
SHT 3 B3 SHT 4 B1 SHT 3 A4 SHT 4 A5	B	MHAN-9QUJ9P.VER01	ADDED 2.45±0.05 DIM TO PCB VIEWS ADDED NOTE "SCREW NOT INCLUDED" REPLACED DC MODULE FROM WAVE TO BIFURCATE	HCL-WS	01/30/2015	M.HANRAHAN
ALL	C	BWAG-9YF4LW.VER01	REMOVED THE NOTCH FROM SIDE WALL TO MATCH THE ACTUAL PARTS	HCL-JP	07/17/2015	B.WANG
	D	BWAG-9Z3A9B.VER02	UPDATED NOTE 10. DRAWING NUMBER C9143010500 WAS C9143000000 & UPDATED CALLOUT FOR SCREW MOUNTING HOLE IN SHEET-3 FROM 2 TO 10. EXCEPT OPEN HOUSING, OTHER OPTIONS ARE ADDED WITH 2 NOTCH ON SIDE WALLS.	HCL-RV	08/19/2015	B.WANG
SHT1 C7 SHT1 C4	E	DCOY-A2EKRQ.VER01	REMOVED N AND Z OPTIONS FROM POL GUIDE TABLE. REMOVED ROLLED GUIDE PIN OPTION IN PIN STYLE TABLE.	HCL-NN	10/19/2015	D.COVEY

9 2 3 - 3 X 0 E - X X X

- 923 — XCede HD BACKPLANE MODULE MALE STANDARD LOAD
- 3 — 3 PAIR
- 0 — 8-POSITION

LETTER	PLATING
B	NI SULFAMATE, STANDARD GOLD, LEADED
C	NI SULFAMATE, HIGH GOLD, LEADED
D	NI SULFAMATE, STANDARD GOLD, LEADFREE
E	NI SULFAMATE, HIGH GOLD, LEADFREE
F	NANO NI, STANDARD GOLD, LEADED
G	NANO NI, HIGH GOLD, LEADED
H	NANO NI, STANDARD GOLD, LEADFREE
J	NANO NI, HIGH GOLD, LEADFREE

NUMBER	PIN STYLE, HEIGHT
0	GUIDE PIN MACHINED, 25.7mm / OPEN MODULE

NUMBER	SIGNAL & LG. GROUND WIPE LENGTH, COMPLIANT PIN SIZE
1	2 mm WIPE SIGNAL, 4 mm WIPE LG GND, Ø0.0217" DRILL
2	3 mm WIPE SIGNAL, 4 mm WIPE LG GND, Ø0.0217" DRILL
3	2 mm WIPE SIGNAL, 4 mm WIPE LG GND, Ø0.0177" DRILL
4	3 mm WIPE SIGNAL, 4 mm WIPE LG GND, Ø0.0177" DRILL
5	2 mm WIPE SIGNAL, 3 mm WIPE LG GND, Ø0.0217" DRILL
6	3 mm WIPE SIGNAL, 3 mm WIPE LG GND, Ø0.0217" DRILL
7	2 mm WIPE SIGNAL, 3 mm WIPE LG GND, Ø0.0177" DRILL
8	3 mm WIPE SIGNAL, 3 mm WIPE LG GND, Ø0.0177" DRILL
C	2 mm WIPE SIGNAL, 2 mm WIPE LG GND, Ø0.0217" DRILL
D	2 mm WIPE SIGNAL, 2 mm WIPE LG GND, Ø0.0177" DRILL

	LETTER								
LEFT POLARIZING GUIDANCE (SEE SHEET 3)	J (NO KEY)	A	B	C	D	E	F	G	H
RIGHT POLARIZING GUIDANCE (SEE SHEET 4)	Y (NO KEY)	P	Q	R	S	T	U	V	W
OPEN (SEE SHEET 2)	O (ZERO)								
LEFT WALL (SEE SHEET 5)	L								
RIGHT WALL (SEE SHEET 6)	M								
TWO WALL (SEE SHEET 7)	1								

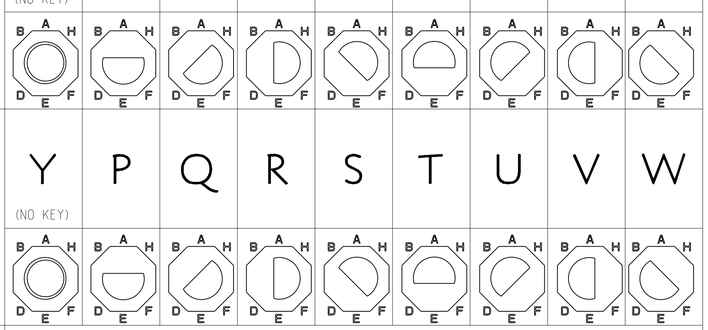

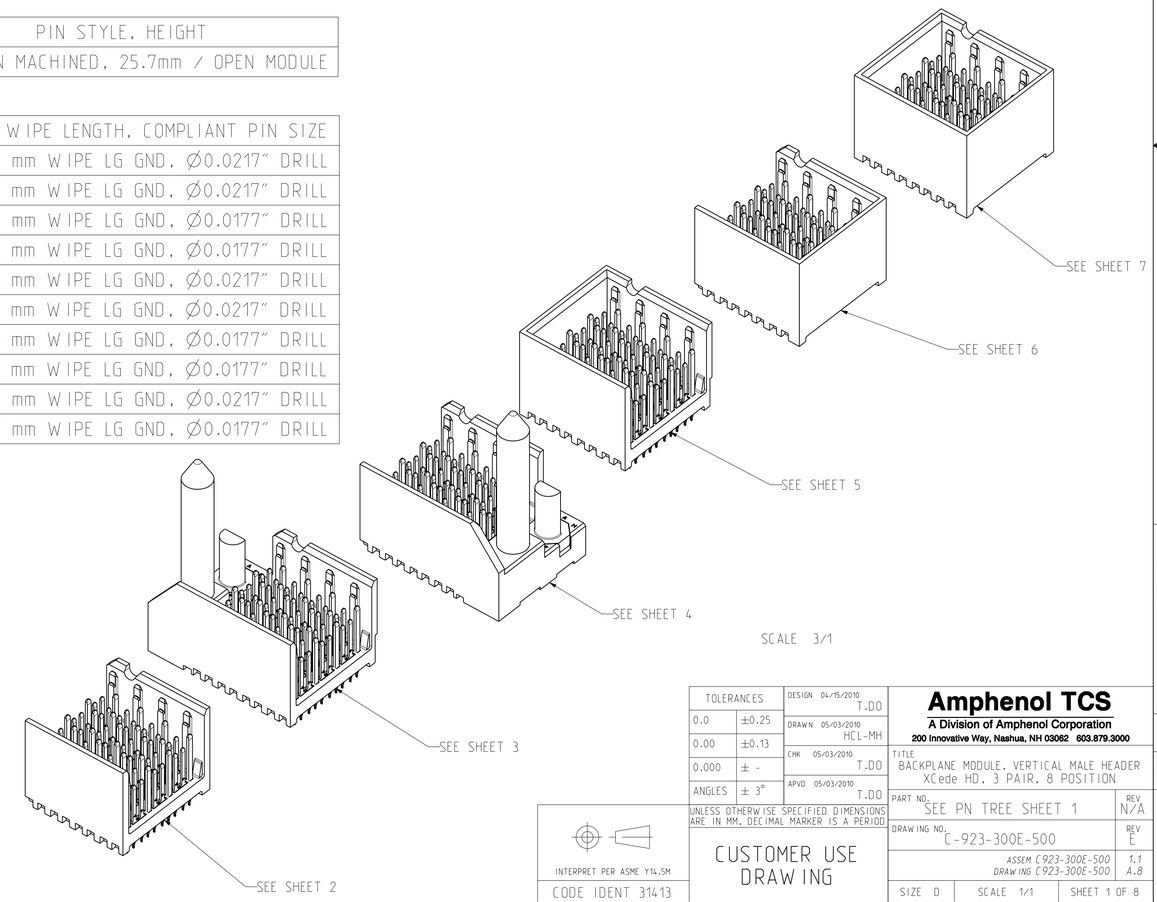

SCALE 3/1

NOTES:

1. REFER TO TB-2308 FOR XCede HD PRODUCT SPECIFICATIONS.
2. NOTCH DESIGNATES "ROW A" SIDE OF SHROUD. NOTCH FEATURE ON OPPOSITE SIDE FROM PART MARKING.
3. PART MARKING AS FOLLOWS:
   LINE 1: "ATCS" AND DATECODE (ATCS YYWW).
   LINE 2: MODULE PART NUMBER (923-####-###).
   LINE 3: WORK ORDER NUMBER (###*######).
   WHERE "*" DENOTES MANUFACTURING LOCATION.
4. PLATING THICKNESS OF SIGNAL CONTACT AND GROUND CONTACT IS DETERMINED BY PLATING CODE. SEE PART NUMBER TREE SHEET 1.
5. REPAIR PROCEDURE FOR MODULE. SEE TB-2245.
6. SEE TB-2237 FOR ROUTING GUIDELINES & PTH REQ'S.
7. SEE DOC XXXX-XXXX-XXX FOR TOOLING KEEPOUT ZONES.
8. BACKPLANE DATUM REFERENCE.
9. DIMENSIONS APPLY FOR BOTH COMPLIANT PIN SIZES.
10. OPTIONAL HOLE/MOUNTING SCREW LOCATION FOR GROUNDED PIN OR ADDITIONAL GUIDE PIN SUPPORT. SEE DRAWING C-914-3010-500 FOR OPTIONAL HOLE DETAILS. ONLY APPLIES FOR MACHINED GUIDE PIN APPLICATIONS.

TOLERANCES	
0.0	±0.25
0.00	±0.13
0.000	± -
ANGLES	± 3°

UNLESS OTHERWISE SPECIFIED DIMENSIONS ARE IN MM. DECIMAL MARKER IS A PERIOD

DESIGN 04/15/2010 T.DO
DRAWN 05/03/2010 HCL-MH
CHK 05/03/2010 T.DO
APVD 05/03/2010 T.DO

Amphenol TCS
A Division of Amphenol Corporation
200 Innovative Way, Nashua, NH 03062 603.879.3000

TITLE BACKPLANE MODULE, VERTICAL MALE HEADER XCede HD, 3 PAIR, 8 POSITION

PART NO. SEE PN TREE SHEET 1 | REV N/A
DRAWING NO. C-923-300E-500 | REV E
ASSEM C923-300E-500 1.1
DRAWING C923-300E-500 A.8

INTERPRET PER ASME Y14.5M
CODE IDENT 31413
CUSTOMER USE DRAWING
SIZE D | SCALE 1/1 | SHEET 1 OF 8

DRW NO. C-923-300E-500 | SH 1 | REV E

DRW NO.	SH	REV
C-923-300E-500	2	E

ZONE	REV	SCR NUMBER	DESCRIPTION	BY	DATE	APPROVED
			SEE SHEET 1			

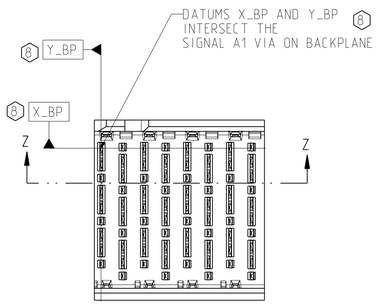

OPEN BACKPLANE MODULE DIMENSION

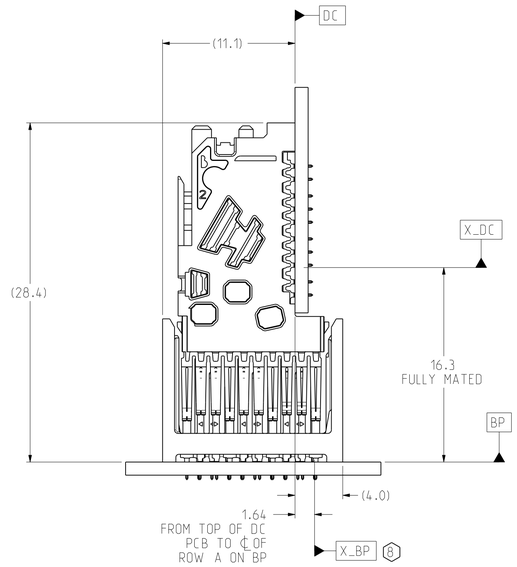

CONNECTOR REFERENCE
SCALE 4/1

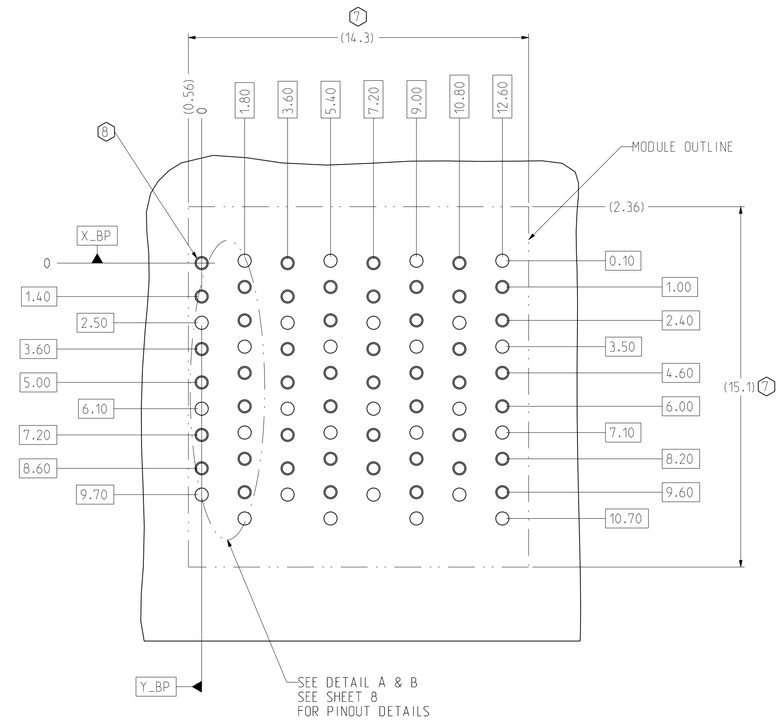

BP HOLE PATTERN
COMPONENT SIDE
SCALE 8/1

OPEN BACKPLANE FOOTPRINT

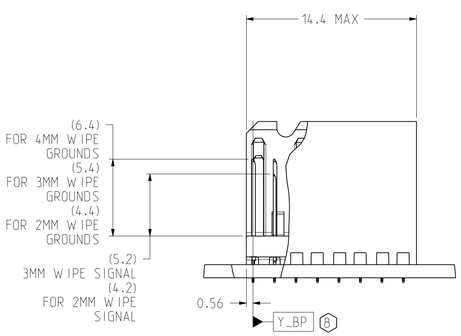

SECTION Z-Z

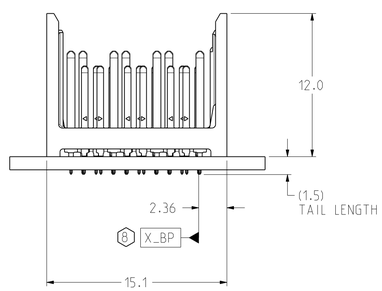

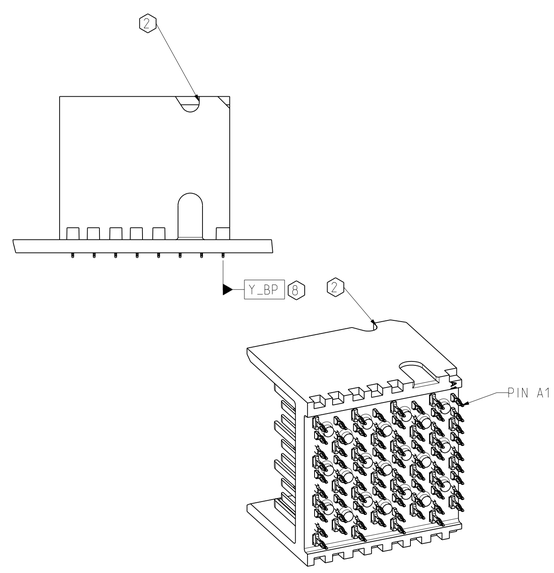

ISOMETRIC VIEW
SCALE 4/1

TOLERANCES	
0.0	±0.25
0.00	±0.13
0.000	± -
ANGLES	± 3°

UNLESS OTHERWISE SPECIFIED DIMENSIONS ARE IN MM. DECIMAL MARKER IS A PERIOD

INTERPRET PER ASME Y14.5M

CODE IDENT 31413

CUSTOMER USE DRAWING

DESIGN 04/15/2010 T.DO
DRAWN 05/03/2010 HCL-MH
CHK 05/03/2010 T.DO
APVD 05/03/2010 T.DO

Amphenol TCS
A Division of Amphenol Corporation
200 Innovative Way, Nashua, NH 03062 603.879.3000

TITLE BACKPLANE MODULE. VERTICAL MALE HEADER XCede HD. 3 PAIR. 8 POSITION

PART NO. SEE PN TREE SHEET 1 — REV N/A
DRAWING NO. C-923-300E-500 — REV E
ASSEM C923-300E-500 1.1
DRAWING C923-300E-500 A.8
SIZE D — SCALE 1/1 — SHEET 2 OF 8

DRW NO. C-923-300E-500 SH 2 REV E

DRW NO.	SH	REV
C-923-300E-500	3	E

ZONE	REV	SCR NUMBER	DESCRIPTION	BY	DATE	APPROVED
			SEE SHEET 1			

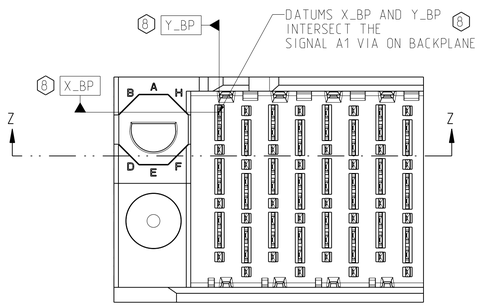

LEFT POLARIZING/GUIDE BACKPLANE MODULE DIMENSION

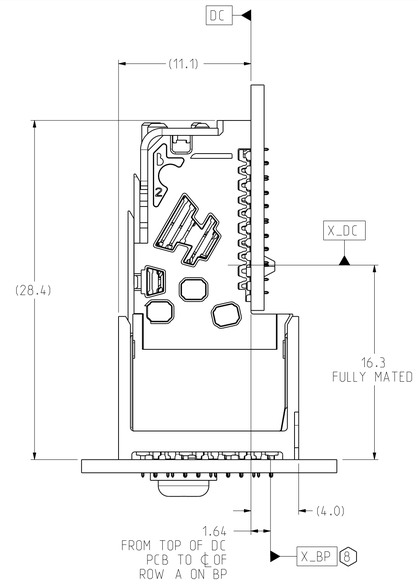

CONNECTOR REFERENCE
SCALE 4/1

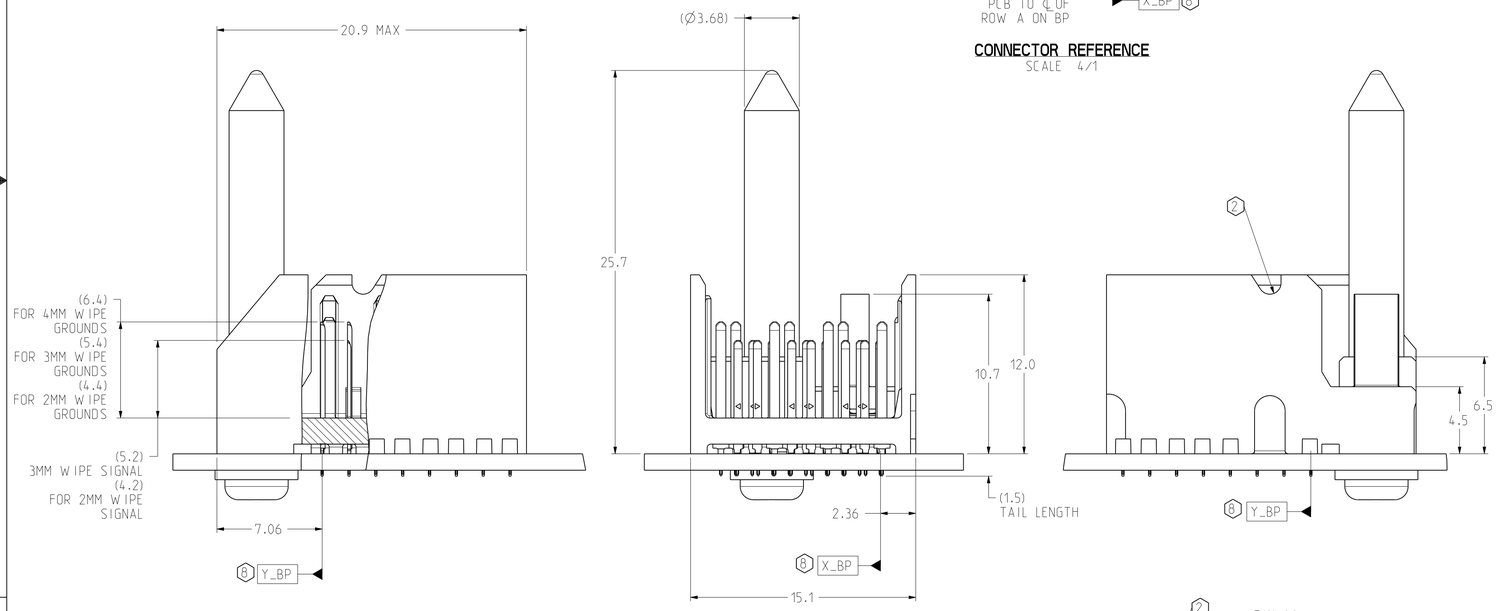

SECTION Z-Z

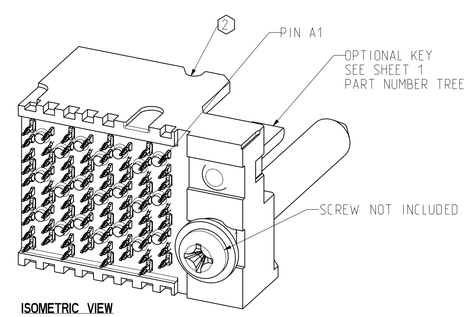

ISOMETRIC VIEW
SCALE 4/1

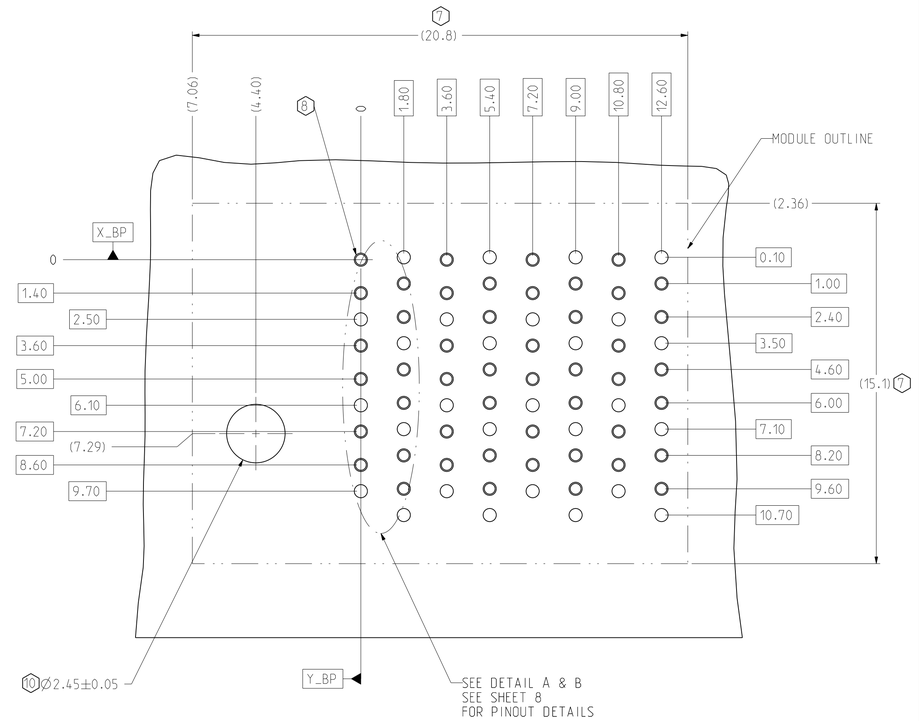

BP HOLE PATTERN COMPONENT SIDE
SCALE 8/1

LEFT POLARIZING/GUIDE BACKPLANE FOOTPRINT

TOLERANCES	
0.0	±0.25
0.00	±0.13
0.000	± -
ANGLES	± 3°

UNLESS OTHERWISE SPECIFIED DIMENSIONS ARE IN MM. DECIMAL MARKER IS A PERIOD

INTERPRET PER ASME Y14.5M

CODE IDENT 31413

CUSTOMER USE DRAWING

DESIGN 04/15/2010 T.DO
DRAWN 05/03/2010 HCL-MH
CHK 05/03/2010 T.DO
APVD 05/03/2010 T.DO

Amphenol TCS
A Division of Amphenol Corporation
200 Innovative Way, Nashua, NH 03062 603.879.3000

TITLE
BACKPLANE MODULE. VERTICAL MALE HEADER
XCede HD. 3 PAIR. 8 POSITION

PART NO. SEE PN TREE SHEET 1 — REV N/A
DRAWING NO. C-923-300E-500 — REV E
ASSEM C923-300E-500 1.1
DRAWING C923-300E-500 A.8
SIZE D | SCALE 1/1 | SHEET 3 OF 8

DRW NO. C-923-300E-500 | SH 3 | REV E

DRW NO.	SH	REV
C-923-300E-500	4	E

ZONE	REV	SCR NUMBER	DESCRIPTION	BY	DATE	APPROVED
			SEE SHEET 1			

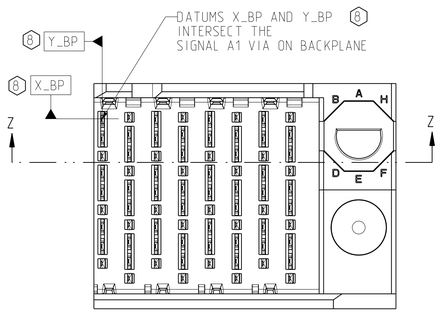

RIGHT POLARIZING/GUIDE
BACKPLANE MODULE DIMENSION

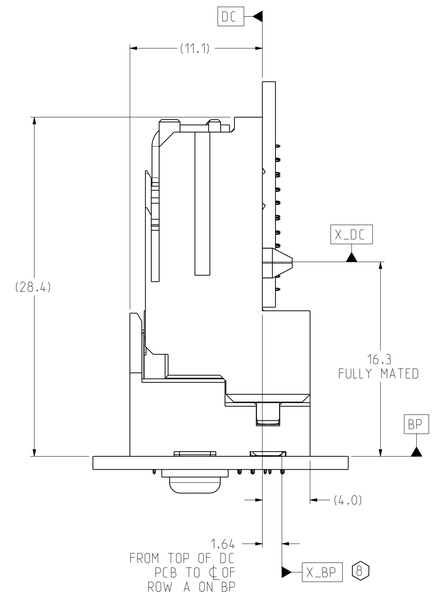

CONNECTOR REFERENCE
SCALE 4/1

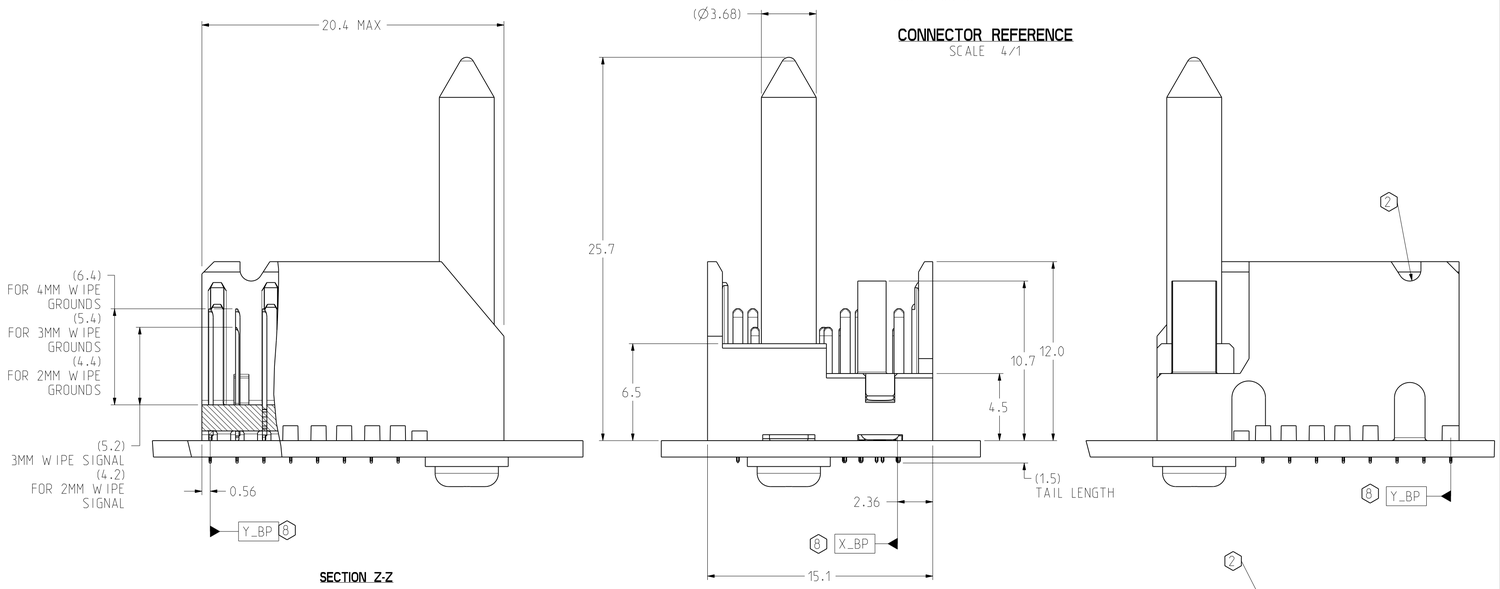

SECTION Z-Z

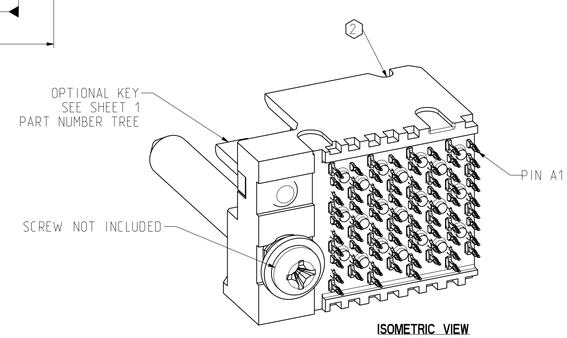

ISOMETRIC VIEW
SCALE 4/1

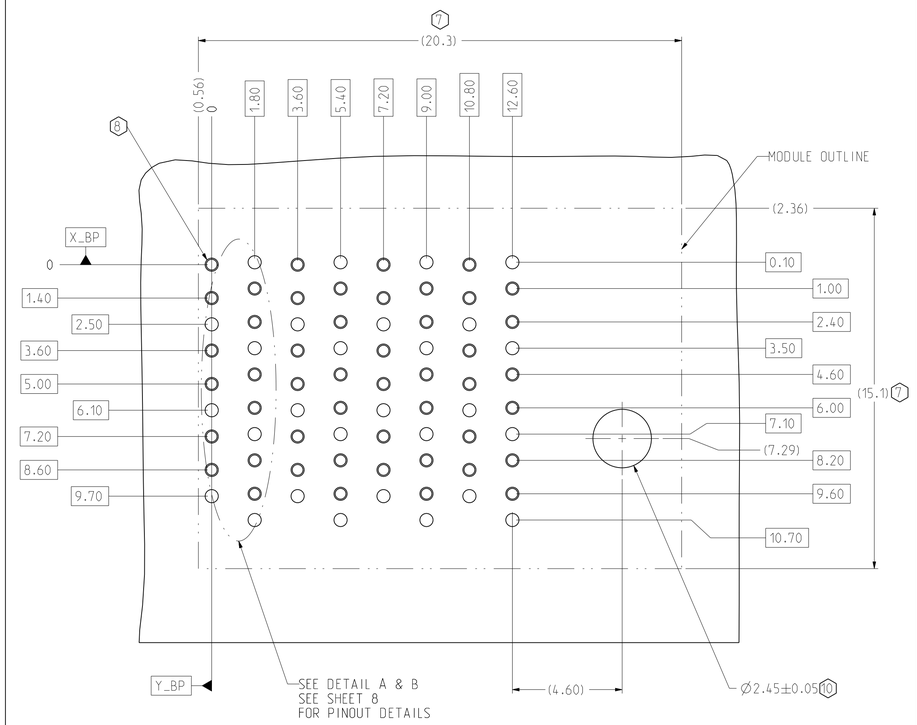

BP HOLE PATTERN
COMPONENT SIDE
SCALE 8/1

RIGHT POLARIZING/GUIDE
BACKPLANE FOOTPRINT

TOLERANCES	
0.0	±0.25
0.00	±0.13
0.000	± -
ANGLES	± 3°

UNLESS OTHERWISE SPECIFIED DIMENSIONS ARE IN MM. DECIMAL MARKER IS A PERIOD

INTERPRET PER ASME Y14.5M

CODE IDENT 31413

CUSTOMER USE DRAWING

DESIGN 04/15/2010 T.DO
DRAWN 05/03/2010 HCL-MH
CHK 05/03/2010 T.DO
APVD 05/03/2010 T.DO

Amphenol TCS
A Division of Amphenol Corporation
200 Innovative Way, Nashua, NH 03062 603.879.3000

TITLE BACKPLANE MODULE. VERTICAL MALE HEADER XCede HD. 3 PAIR. 8 POSITION

PART NO. SEE PN TREE SHEET 1 — REV N/A
DRAWING NO. C-923-300E-500 — REV E
ASSEM C923-300E-500 1.1
DRAWING C923-300E-500 A.8
SIZE D — SCALE 1/1 — SHEET 4 OF 8

DRW NO. C-923-300E-500 SH 4 REV E

ZONE	REV	SCR NUMBER	DESCRIPTION	BY	DATE	APPROVED
			SEE SHEET 1			

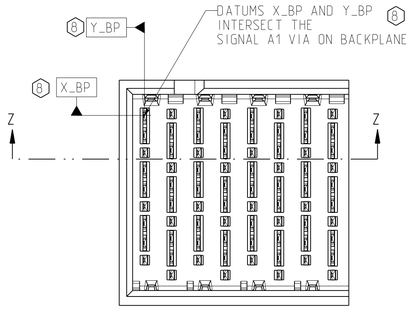

LEFT WALL BACKPLANE MODULE DIMENSION

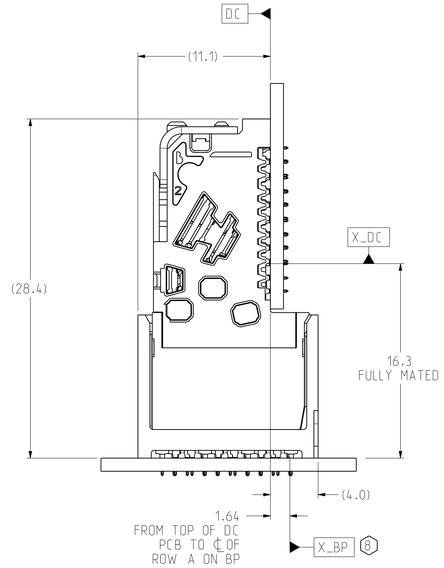

CONNECTOR REFERENCE
SCALE 4/1

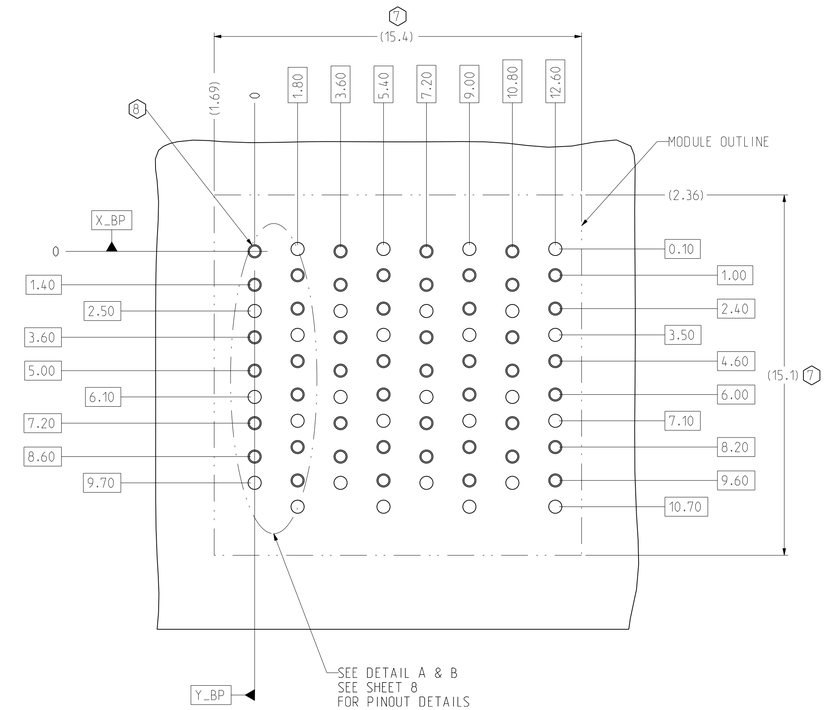

BP HOLE PATTERN
COMPONENT SIDE
SCALE 8/1

LEFT WALL BACKPLANE FOOTPRINT

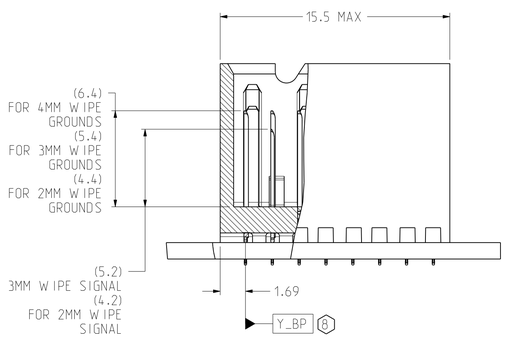

SECTION Z-Z

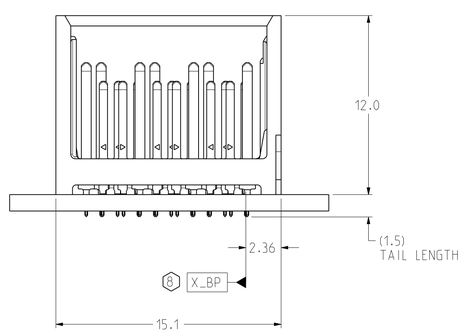

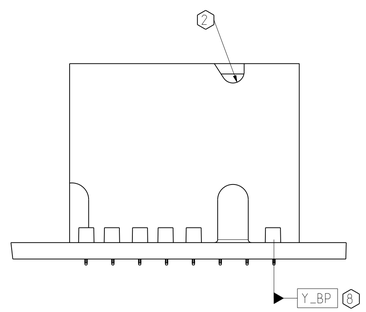

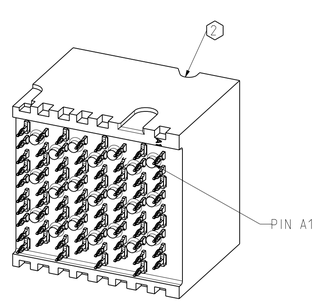

ISOMETRIC VIEW
SCALE 4/1

TOLERANCES	
0.0	±0.25
0.00	±0.13
0.000	± -
ANGLES	± 3°

UNLESS OTHERWISE SPECIFIED DIMENSIONS ARE IN MM. DECIMAL MARKER IS A PERIOD

INTERPRET PER ASME Y14.5M

CODE IDENT 31413

CUSTOMER USE DRAWING

DESIGN 04/15/2010 T.DO
DRAWN 05/03/2010 HCL-MH
CHK 05/03/2010 T.DO
APVD 05/03/2010 T.DO

Amphenol TCS
A Division of Amphenol Corporation
200 Innovative Way, Nashua, NH 03062 603.879.3000

TITLE BACKPLANE MODULE. VERTICAL MALE HEADER XCede HD. 3 PAIR. 8 POSITION

PART NO. SEE PN TREE SHEET 1 REV N/A
DRAWING NO. C-923-300E-500 REV E
ASSEM C923-300E-500 1.1
DRAWING C923-300E-500 A.8
SIZE D SCALE 1/1 SHEET 5 OF 8

DRW NO. C-923-300E-500 SH 5 REV E

DRW NO.	SH	REV
C-923-300E-500	6	E

ZONE	REV	SCR NUMBER	DESCRIPTION	BY	DATE	APPROVED
			SEE SHEET 1			

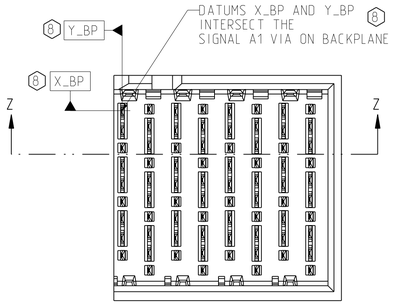

RIGHT WALL BACKPLANE MODULE DIMENSION

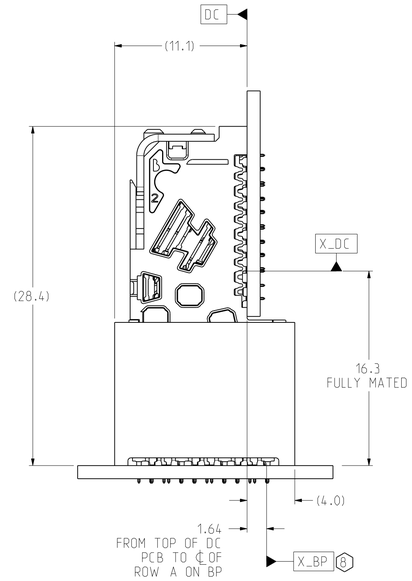

CONNECTOR REFERENCE
SCALE 4/1

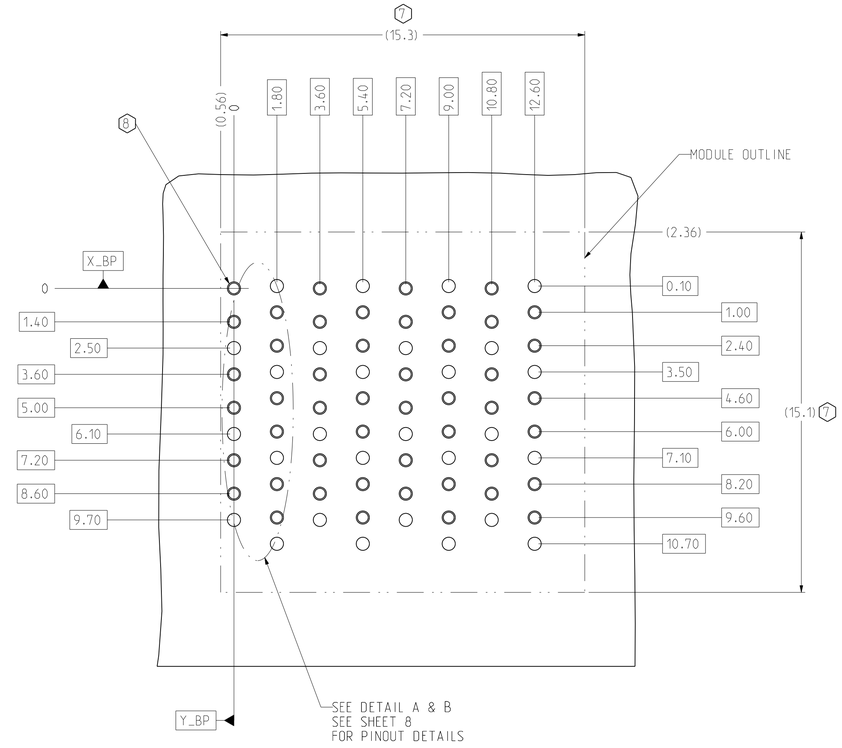

BP HOLE PATTERN
COMPONENT SIDE
SCALE 8/1

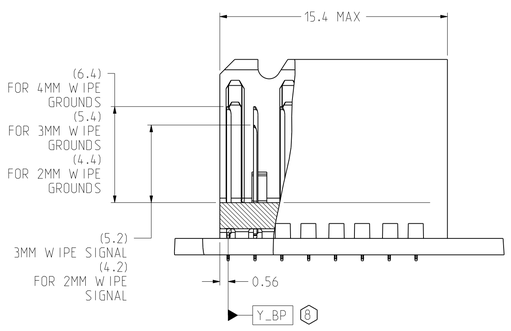

SECTION Z-Z

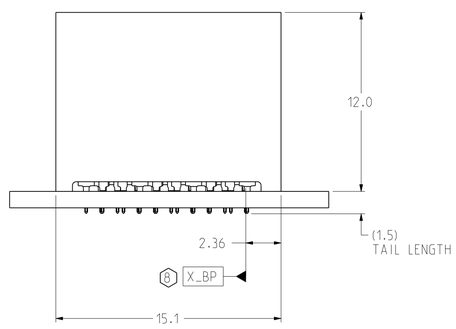

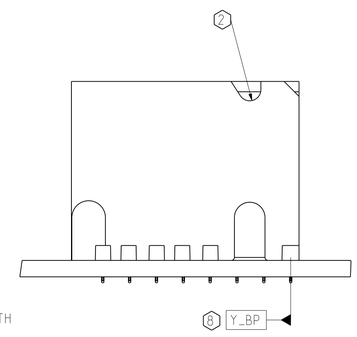

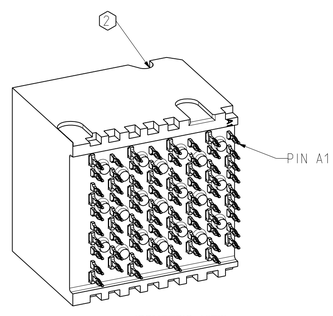

ISOMETRIC VIEW
SCALE 4/1

RIGHT WALL BACKPLANE FOOTPRINT

TOLERANCES	
0.0	±0.25
0.00	±0.13
0.000	± -
ANGLES	± 3°

UNLESS OTHERWISE SPECIFIED DIMENSIONS ARE IN MM. DECIMAL MARKER IS A PERIOD

INTERPRET PER ASME Y14.5M

CODE IDENT 31413

CUSTOMER USE DRAWING

DESIGN 04/15/2010 T.DO
DRAWN 05/03/2010 HCL-MH
CHK 05/03/2010 T.DO
APVD 05/03/2010 T.DO

Amphenol TCS
A Division of Amphenol Corporation
200 Innovative Way, Nashua, NH 03062 603.879.3000

TITLE BACKPLANE MODULE, VERTICAL MALE HEADER XCede HD, 3 PAIR, 8 POSITION

PART NO. SEE PN TREE SHEET 1 — REV N/A

DRAWING NO. C-923-300E-500 — REV E

ASSEM C923-300E-500 1.1
DRAWING C923-300E-500 A.8

SIZE D | SCALE 1/1 | SHEET 6 OF 8

DRW NO. C-923-300E-500 SH 6 REV E

DRW NO.	SH	REV
C-923-300E-500	7	E

ZONE	REV	SCR NUMBER	DESCRIPTION	BY	DATE	APPROVED
			SEE SHEET 1			

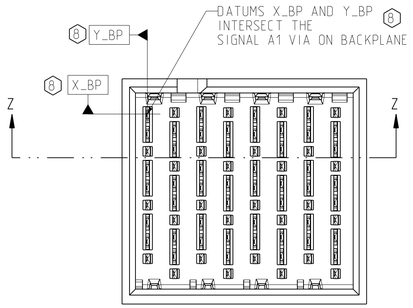

TWO WALL BACKPLANE MODULE DIMENSION

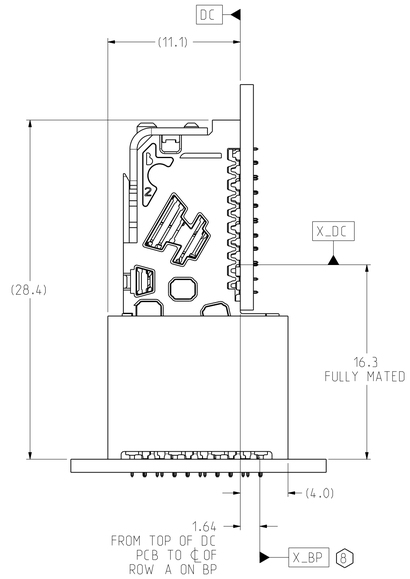

CONNECTOR REFERENCE
SCALE 4/1

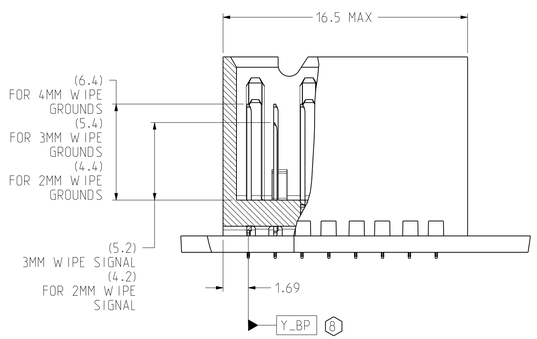

SECTION Z-Z

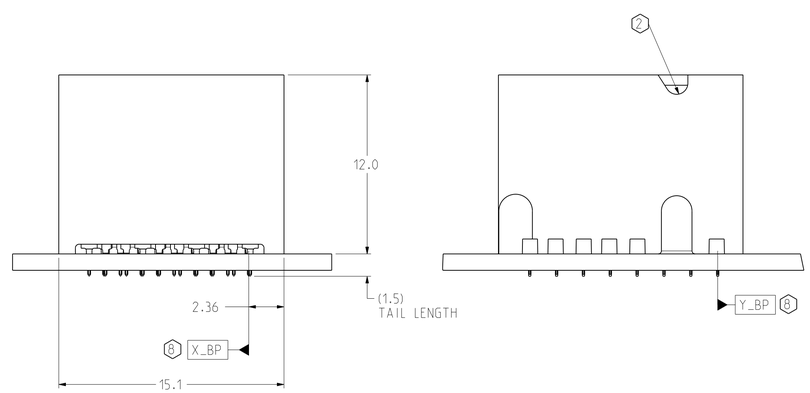

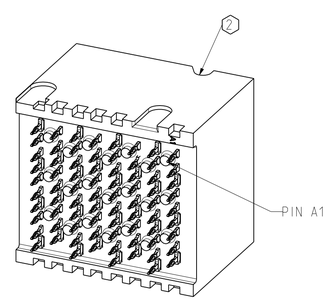

ISOMETRIC VIEW
SCALE 4/1

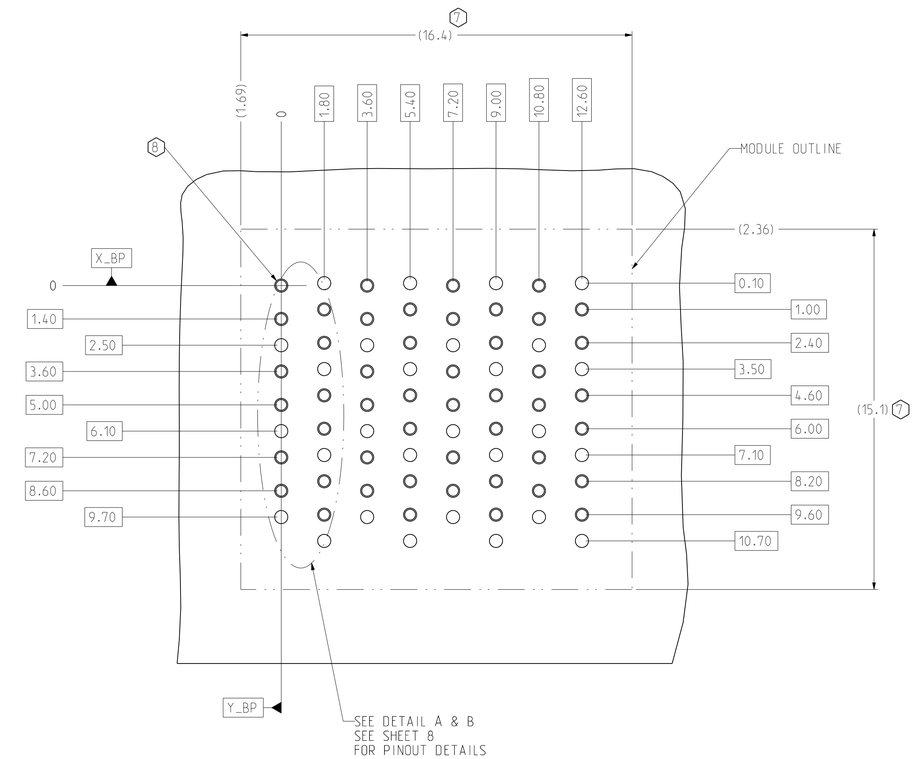

BP HOLE PATTERN
COMPONENT SIDE
SCALE 8/1

TWO WALL BACKPLANE FOOTPRINT

TOLERANCES	
0.0	±0.25
0.00	±0.13
0.000	± -
ANGLES	± 3°

UNLESS OTHERWISE SPECIFIED DIMENSIONS ARE IN MM. DECIMAL MARKER IS A PERIOD

INTERPRET PER ASME Y14.5M

CODE IDENT 31413

CUSTOMER USE DRAWING

DESIGN 04/15/2010	T.DO
DRAWN 05/03/2010	HCL-MH
CHK 05/03/2010	T.DO
APVD 05/03/2010	T.DO

Amphenol TCS
A Division of Amphenol Corporation
200 Innovative Way, Nashua, NH 03062 603.879.3000

TITLE BACKPLANE MODULE, VERTICAL MALE HEADER XCede HD, 3 PAIR, 8 POSITION

PART NO.	REV
SEE PN TREE SHEET 1	N/A
DRAWING NO. C-923-300E-500	REV E
ASSEM C923-300E-500 / DRAWING C923-300E-500	1.1 / A.8

SIZE D | SCALE 1/1 | SHEET 7 OF 8

DRW NO. C-923-300E-500 | SH 7 | REV E

ZONE	REV	SCR NUMBER	DESCRIPTION	BY	DATE	APPROVED
			SEE SHEET 1			

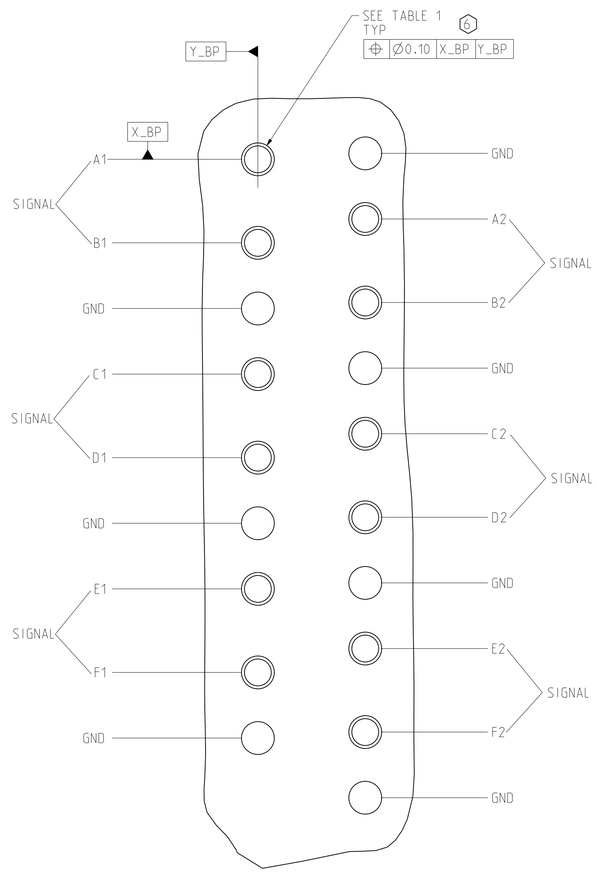

DETAIL A
HSD PINOUTS
SCALE 20/1

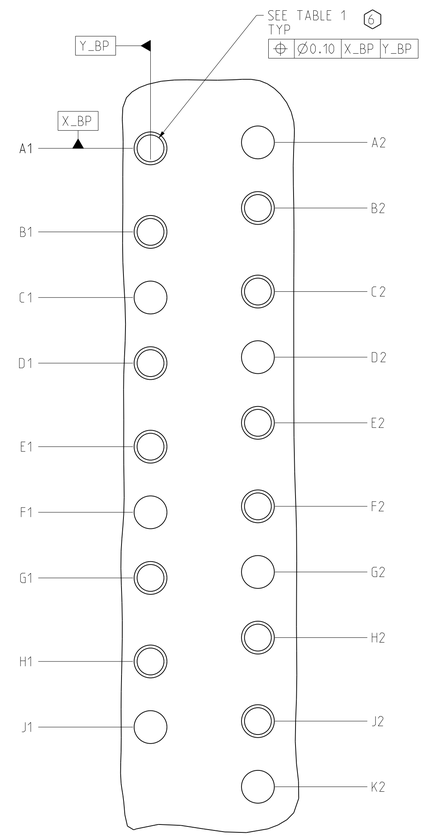

DETAIL B
LC PINOUTS
SCALE 20/1

TABLE 1 (6)

	COMPLIANT PIN DRILL Ø.0217"	COMPLIANT PIN DRILL Ø.0177"
PTH	Ø0.45±0.05	Ø0.36±0.05
DRILL	Ø0.55 [.0217"]	Ø0.45 [.0177"]
PAD	Ø0.85	Ø0.75

TOLERANCES	
0.0	±0.25
0.00	±0.13
0.000	± -
ANGLES	± 3°

UNLESS OTHERWISE SPECIFIED DIMENSIONS ARE IN MM. DECIMAL MARKER IS A PERIOD

INTERPRET PER ASME Y14.5M

CODE IDENT 31413

CUSTOMER USE DRAWING

DESIGN 04/15/2010 T.DO
DRAWN 05/03/2010 HCL-MH
CHK 05/03/2010 T.DO
APVD 05/03/2010 T.DO

Amphenol TCS
A Division of Amphenol Corporation
200 Innovative Way, Nashua, NH 03062 603.879.3000

TITLE BACKPLANE MODULE. VERTICAL MALE HEADER XCede HD. 3 PAIR. 8 POSITION

PART NO. SEE PN TREE SHEET 1 | REV N/A
DRAWING NO. C-923-300E-500 | REV E
ASSEM C923-300E-500 1.1
DRAWING C923-300E-500 A.8

SIZE D | SCALE 1/1 | SHEET 8 OF 8

DRW NO. C-923-300E-500 | SH 8 | REV E