DRW NO.	SH	REV
C-968-3200-500	1	A

ZONE	REV	SCR NUMBER	DESCRIPTION	BY	DATE	APPROVED
ALL	A	MHAN-9MZHHS.VER01	NEW RELEASE	HCL-NN	08/21/2014	M.HANRAHAN

TABLE 1	
PART NUMBER	PLATING
968-3200-A1D	NI SULFAMATE, STANDARD GOLD, LEADFREE
968-3200-A1E	NI SULFAMATE, HIGH GOLD, LEADFREE
968-3200-A1H	NANO NI, STANDARD GOLD, LEADFREE
968-3200-A1J	NANO NI, HIGH GOLD, LEADFREE

TABLE 2 (8)		
CONFIGURATION	DIM L	DIM R
OPEN	3.12	5.88
LEFT POLARIZED	3.12	13.08
RIGHT POLARIZED	10.32	5.88
LEFT WALL	3.12	7.68
RIGHT WALL	4.92	5.88
TWO WALL	4.92	7.68

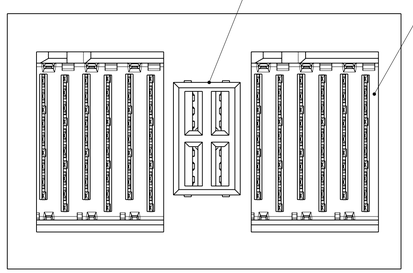

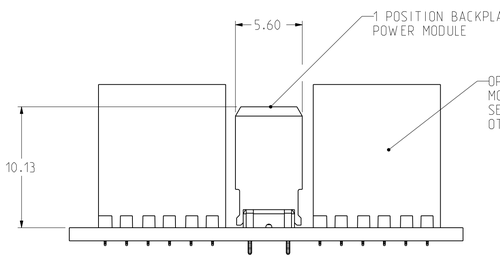

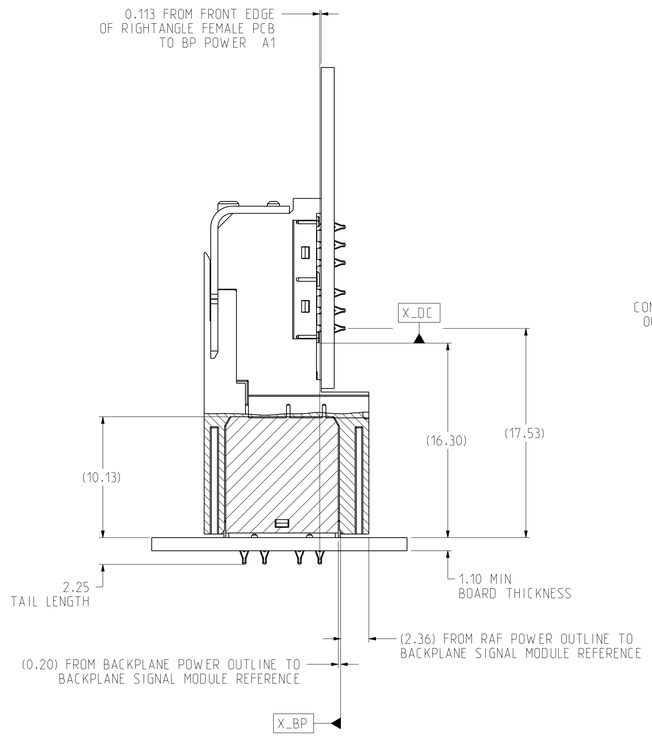

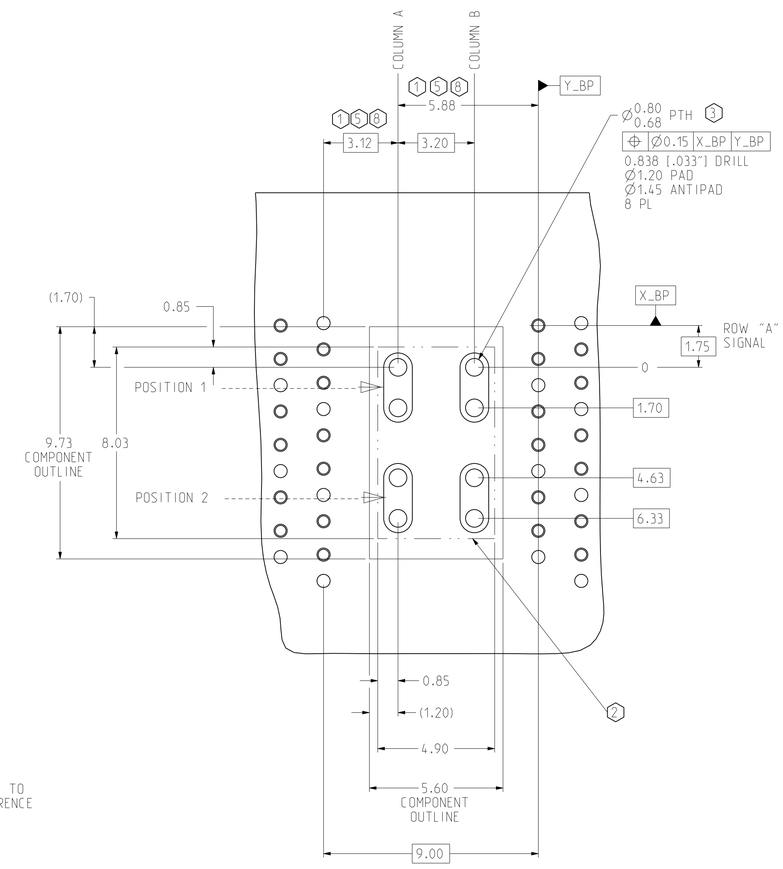

RECOMMENDED BACKPLANE POWER 1 POSITION HOLE PATTERN
SCALE 8/1

NOTES

1. FOR EACH ADDITIONAL POWER MODULE. ADD 7.20mm
2. NO SURFACE TRACES IN KEEP OUT ZONE.
3. STATED PAD SIZE MAY REQUIRE FILLETING. SEE TB-2237 FOR ROUTING GUIDELINES.
4. REFER TO TB-2235 FOR XCede HD PRODUCT SPECIFICATIONS.
5. WHEN USING ENDCAPS BETWEEN SIGNAL WAFERS AND DC POWER MODULES ADD 1.80mm FOR EACH ENDCAP. VIEW SHOWN WITHOUT ENDCAPS. FOR ENDCAPS THAT ARE USED BETWEEN DC POWER MODULES AND DO NOT PLUG INTO A MULTI-UP BP POWER MODULE. ADD 1.80mm FOR EACH ENDCAP.
6. REFER TO BACKPLANE CUSTOMER USE DRAWINGS FOR ROW AND COLUMN ASSIGNMENTS.
7. BLADE POSITION A# CONTAINS PINS A#_1 AND A#_2.
8. SEE TABLE 2 FOR OFFSET DIMENSION FOR ADJACENT SIGNAL COLUMN OF ALL CONFIGURATIONS.

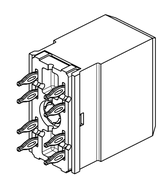

ISOMETRIC VIEW
SCALE 4/1

TOLERANCES	
0.0	±0.25
0.00	±0.13
0.000	± -
ANGLES	± 3°

UNLESS OTHERWISE SPECIFIED DIMENSIONS ARE IN MM. DECIMAL MARKER IS A PERIOD

INTERPRET PER ASME Y14.5M

CUSTOMER USE DRAWING

CODE IDENT 31413

DESIGN 04/24/2014 M.HANRAHAN
DRAWN 04/24/2014 HCL-AS
CHK 04/24/2014 M.HANRAHAN
APVD 04/24/2014 M.HANRAHAN

Amphenol TCS
A Division of Amphenol Corporation
200 Innovative Way, Nashua, NH 03062 603.879.3000

TITLE: BACKPLANE POWER ASSEMBLY
XCede HD 3 PAIR, GEN 2 MINI COMPLIANT

PART NO. SEE TABLE 1 — REV N/A
DRAWING NO. C-968-3200-500 — REV A
ASSEM: Q1161-AR-HD-3PR-BP-G2-MINI-PWR 0.4
DRAWING: C968-3200-500 0.12
SIZE D — SCALE 4/1 — SHEET 1 OF 1

DRW NO. C-968-3200-500 SH 1 REV A