This document is the property of Amphenol Corporation and is delivered on the express condition that it is not to be disclosed, reproduced or used, in whole or in part, for manufacture or sale by anyone other than Amphenol Corporation without its prior concert, & that no right is granted to disclose or to use any information in this document.

CUSTOMER DRAWING

REVISIONS

SYM	ECN	DESCRIPTION	DATE	APPROVED
1	CD0828	NEW RELEASE	Jul.15,2015	YH
2	CD1012	ADD THE TOOLED STATUS	May.18,2018	YH

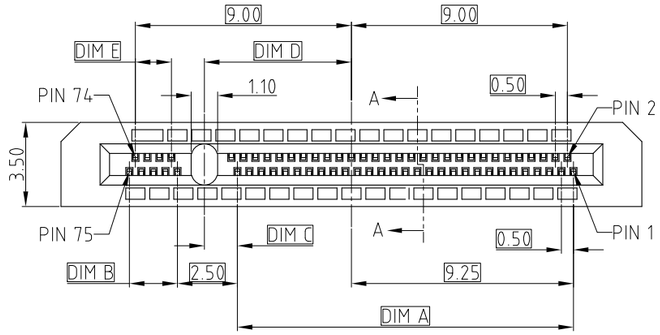

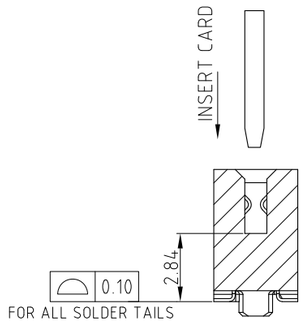

SECTIOM A-A

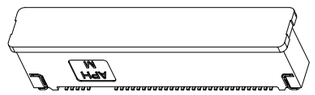

WITH PICK UP CAP

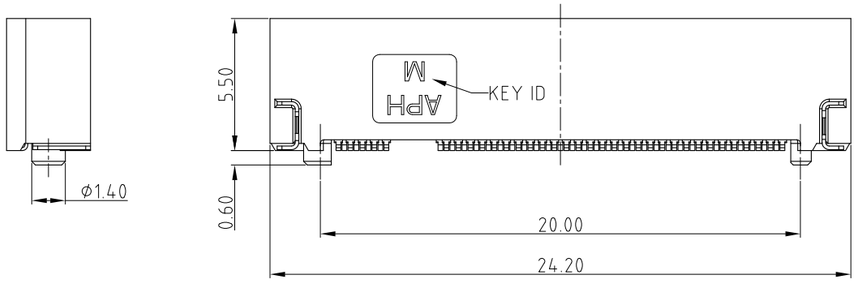

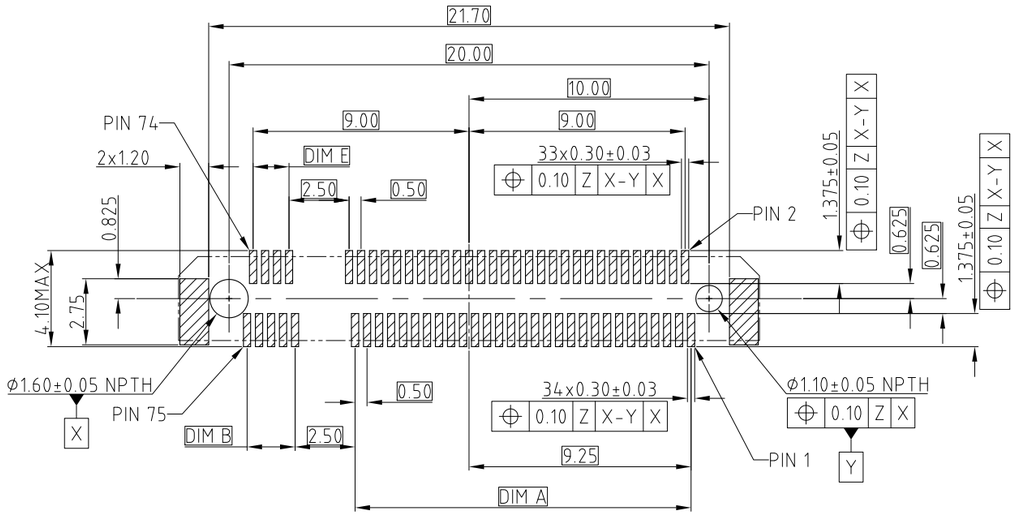

RECOMMENDED PCB OUTLINE
TOLERANCE: ±0.05
DATUM Z: PCB SOLDER SURFACE

NOTE:

1. MATERIAL:
   PLASTIC: LCP, UL 94V-0, BLACK
   CONTACT: COPPER ALLOY
   BOARD LOCK: ALLOY
2. FINISHED:
   CONTACT AREA: SEE P/N SYSTEM
   SOLDER AREA: GOLD FLASH
   BOARD LOCK: TIN PLATING 2.54um MIN
   UNDERPLATED: NI PLATING 1.27um MIN
3. ELECTRICAL PERFORMANCE:
   3.1 CURRENT RATING: 0.5A PER PIN
   3.2 DIELECTRIC STRENGTH: 300V AC FOR 1 MINUTE
   3.3 INSULATION RESISTANCE: 500MΩ MIN
   3.4 CONTACT RESISTANCE: 55mΩ MAX
   3.5 OPERATION TEMPERATURE: -40°C TO +80°C
4. DIMENSIONING SHALL BE INTERPRETED PER ASME Y14.5M 1994
5. MATERIAL SHOULD BE FULFILLED AMPHENOL SPEC# S-SN-002
   FOR HALOGEN FREE PRODUCTS, ALSO NEED TO MEET # S-SN-004

ORDER P/N SYSTEM:

MDT350X0X001VT

CONNECTOR KEY ID — PLATING

A - KEY A	TOOLED
B - KEY B	TOOLED
E - KEY E	NOT TOOLED
M - KEY M	TOOLED
...	

01 0.76 MICRONS GOLD PLATING
02 0.38 MICRONS GOLD PLATING
03 GOLD FLASH

KEY ID	DIM.A	DIM.B	DIM.C	DIM.D	DIM.E	REMARK
M	14.0	2.0	1.375	6.125	1.50	
E	5.5	10.5	1.125	-2.625	10.50	
B	2.5	13.5		-5.625	13.50	
A	1.5	14.5		-6.625	14.50	

UNLESS OTHERWISE SPECIFIED TOLERANCES

	U.S.	METRIC
.X +/-		0.50
.XX +/-		0.25
.XXX +/-		
FRACTIONS +/-		
ANGLES +/-		5°

FOR MATERIALS AND FINISHES SEE NOTES

REMOVE SHARP EDGES

DIMENSIONS

U.S.	INCHES
(METRIC)	(MM)

APPROVAL		DATE
DRAWN	Yunx.liu	May.18,2018
CHECKED	Ly.yi	May.18,2018
APPROVED		

DRAWING FILE : DRAWING\M.2\CMDT350M0X001VT

ANGLE OF PROJECTION

Amphenol

TITLE

VERTICAL M.2 MINI PCIe CONECTOR

SIZE	DRAWING NO.	REV.
A3	C MDT350X0X001VT	2

SCALE NONE SHEET 1 OF 1