Description:

The ASGTX series Temperature Compensated Crystal Oscillators are designed to be operated in either a TCXO or VCTCXO configuration, with a frequency stability of ±2.0 ppm over an operating temperature range of -40℃ to 85℃. The ASGTX series is available at any frequency between 10MHz and 1.50Ghz, for both LVDS and LVPECL output logic types. This series is also available with LVCMOS output logic in the frequency range of 10MHz to 250MHz. The ASGTX comes in a small form-factor of 9.0x7.0x2.24mm SMD package and is available with reduced lead-time.



Features

- 10MHz to 1.50GHz, any Carrier Frequency in differential mode (LVDS or LVPECL)
- 10MHz to 250MHz, any Carrier Frequency in LVCMOS mode
- -40ºC to +85ºC operating temperature range
- ±1.0ppm stability over -30ºC to +70ºC and ±2.0ppm stability over -40ºC to +85ºC
- Minimum guaranteed pull ability of ± 10ppm minimum (VCTCXO)
- Immediate availability, quick-turn lead-time for small quantities
- REACH/RoHS II Compliant | MSL Level 1
- ESD Sensitive

Typical Applications

- 40G and 100G Ethernet
- WiMax,
- LTE, BTS
- CATV, LAN, LMDS
- Point-to-Point communication network

Electrical Specifications

Parameters		Min.	Typ.	Max.	Units	Notes
Frequency:	LVCMOS	10		250	MHz	
	LVDS	10		1500		
	LVPECL	10		1500		
Operating Temperature:		-40		+85	°C	
Storage Temperature:		-40		+85	°C	
Frequency Stability:						
Initial Set Tolerance:		-1.50	≤ ±1.00	+1.50	ppm	TCXO configuration*
		-1.50	≤ ±1.00	+1.50	ppm	VCTCXO configuration**
Stability over operating temperature	-30°C to +70°C	-1.00		+1.00	ppm	Option “1”
	-40°C to +85°C	-2.00		+2.00		Option “2”
Supply Voltage (Vdd):		3.135	3.300	3.465	V	
Startup Time:				3	ms	
Voltage Control Function (Vcon)		0	1.17	2.5	V	VCTCXO configuration
Frequency Tuning Range:				-10	ppm	At Vcon(min), VDD=3.3Vdc
		+10				At Vcon(max), VDD=3.3Vdc
Phase jitter RMS [tjit(□)] *** (12kHz to 20MHz)			1.0	3.0	ps	Frequency dependent, see Table 1 below

Notes

* Reference to fo, at 25°C ±2°C, 24 hours after reflow, one time , nominal Vdd

** Reference to fo, at 25°C ±2°C, 24 hours after reflow, one time , nominal Vdd, and Vcon = 1.17V +- 0.2V

*** 1.8ps max is guaranteed for LVCMOS and LVDS output modes. For LVPECL mode at carrier frequency greater than 1.289GHz, the maximum RMS jitter is 3.0ps

Electrical Specifications- LVCMOS

Parameters		Min.	Typ.	Max.	Units	Notes
Supply Current (I_{dd})				45	mA	Frequency dependent With CMOS output load
Output Load:				15	pF	
Output Logic Level	V_{OH}	0.9*Vdd			V	
	V_{OL}			0.1*Vdd	V	
Rise Time (Tr):				1000	ps	
Fall Time (Tf):				1000	ps	
Duty Cycle:		45		55	%	@1/2Vdd

Electrical Specifications- LVPECL

Parameters		Min.	Typ.	Max.	Units	Notes
Supply Current (I_{dd})				60	mA	With LVPECL output termination
Output Logic Level	V_{OH}	V_{dd}-1.03		V_{dd}-0.60	V	
	V_{OL}	V_{dd}-1.85		V_{dd}-1.60	V	
Rise Time (Tr):				350	ps	
Fall Time (Tf):				350	ps	
Differential Duty Cycle:		45		55	%	$DODC_{LVPECL}$

Electrical Specifications- LVDS

Parameters	Min.	Typ.	Max.	Units	Notes
Supply Current (Idd)			40	mA	With LVDS output termination
Differential Output Voltage (VOD)	175	350		mV	
VOD Magnitude Change (ΔVOD)			50	mV	
Offset Voltage (VOS)		1.25		V	
VOS Magnitude Change (ΔVOS)			50	mV	
Rise Time (Tr):			350	ps	
Fall Time (Tf):			450	ps	
Differential Duty Cycle:	45		55	%	ODC_{LVDS}

Part Identification

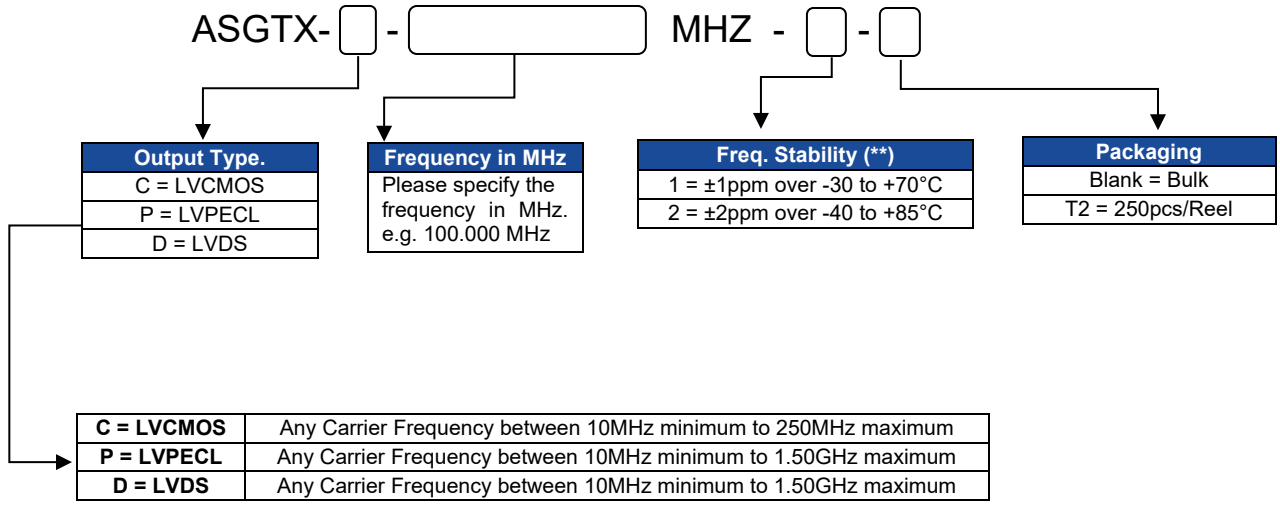

C = LVCMOS	Any Carrier Frequency between 10MHz minimum to 250MHz maximum
P = LVPECL	Any Carrier Frequency between 10MHz minimum to 1.50GHz maximum
D = LVDS	Any Carrier Frequency between 10MHz minimum to 1.50GHz maximum

Typical Phase Jitter Characteristics (Table 1) Integration Bandwidth: 12kHz to 20Mhz

Carrier	RF Output	rms Phase Jitter
10.00MHz	LVDS	992 fs
10.00MHz	LVCMOS	906 fs
25.00MHz	LVDS	774 fs
25.00MHz	LVCMOS	754 fs
50.00MHz	LVDS	768 fs
50.00MHz	LVCMOS	999 fs
120.00MHz	LVCMOS	1.1 ps
500.00MHz	LVPECL	956 fs
1.00GHz	LVDS	911 fs
1.2890625GHz	LVDS	1.03 ps
1.50GHz	LVDS	1.55 ps

Typical Phase Noise Characteristics

LVCMOS Output; 10MHz Carrier

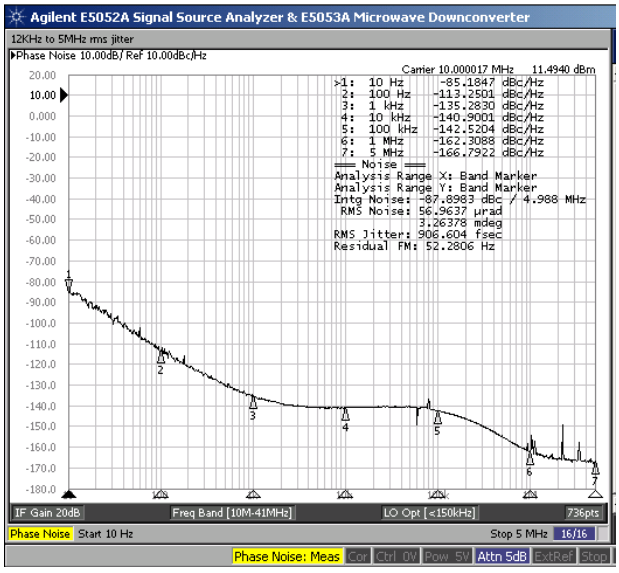

LVDS Output; 10MHz Carrier

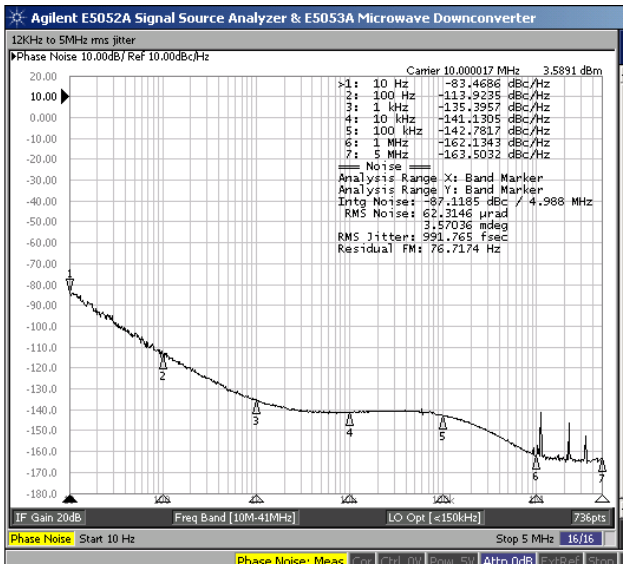

LVCMOS Output; 25MHz Carrier

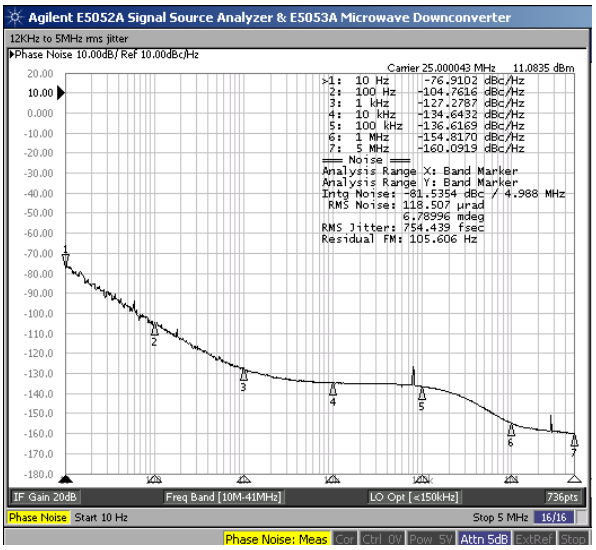

LVDS Output; 25MHz Carrier

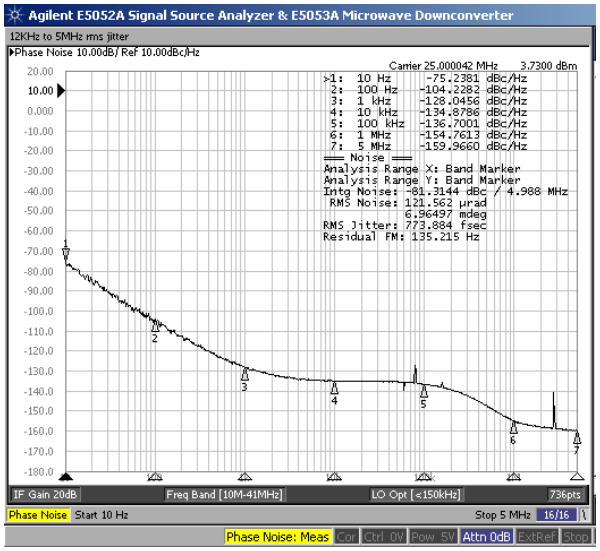

LVCMOS Output; 50MHz Carrier

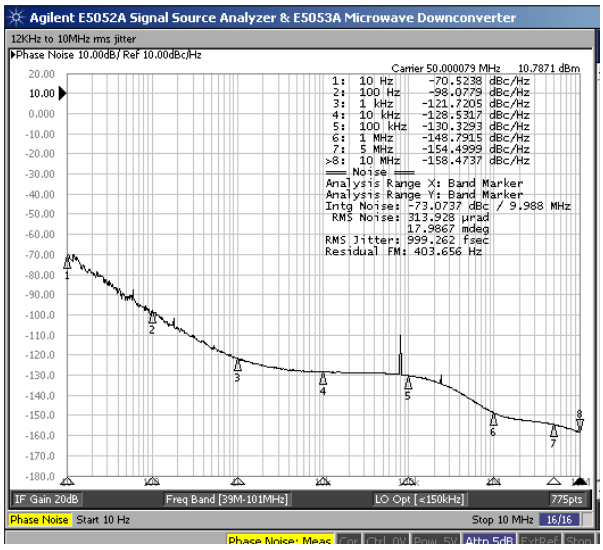

LVDS Output; 50MHz Carrier

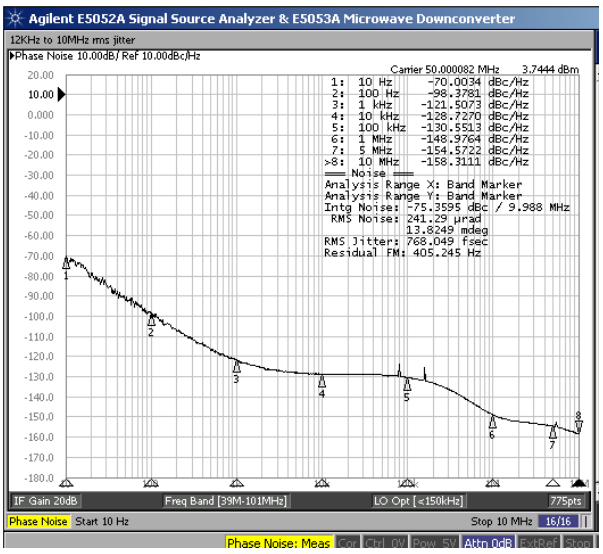

LVCMOS Output; 120MHz Carrier

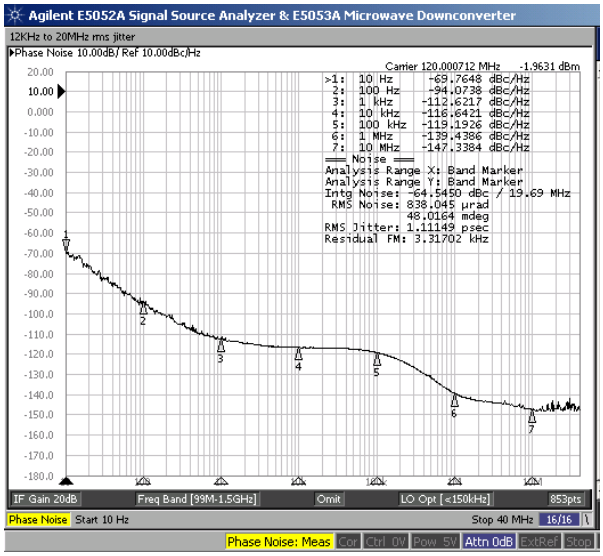

LVPECL Output; 500MHz Carrier

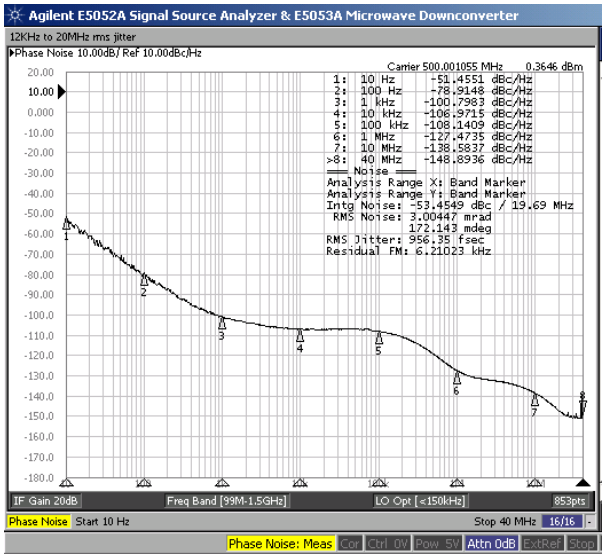

LVDS Output; 1.00GHz Carrier

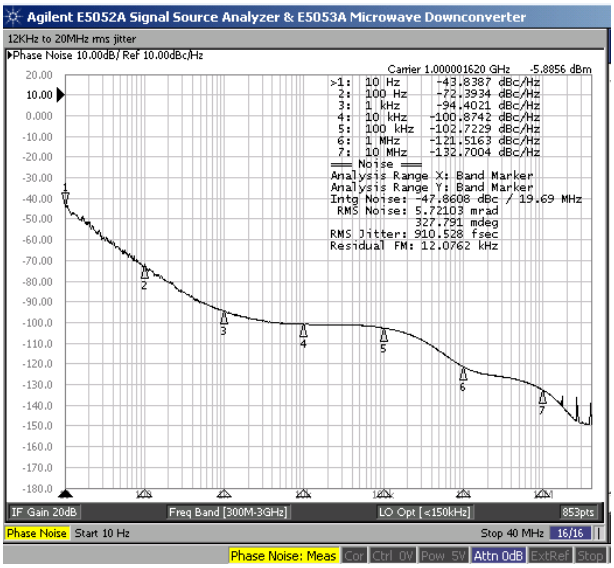

LVDS Output; 1.2890625GHz Carrier

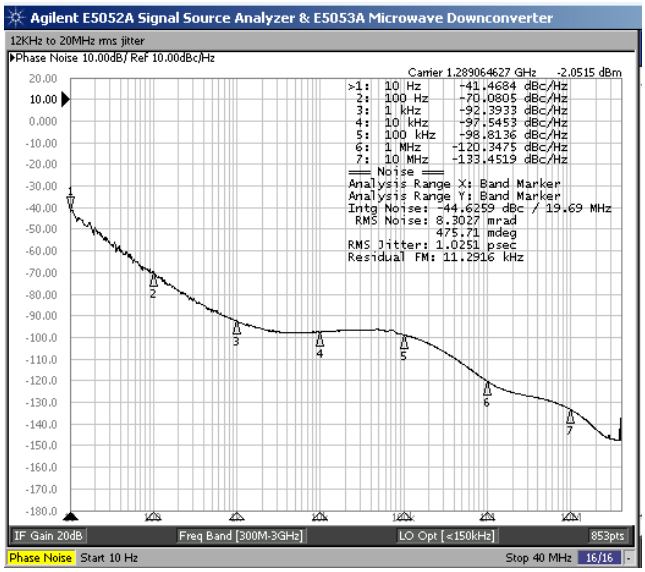

LVDS Output; 1.50GHz Carrier

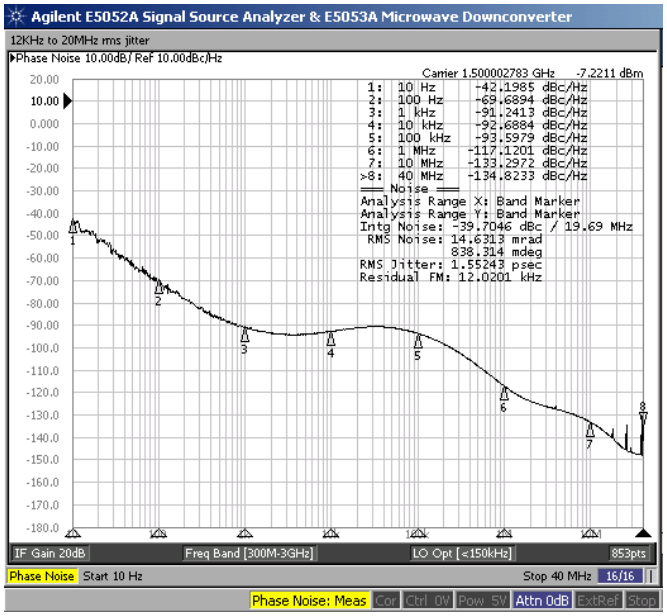

Frequency Stability vs. Temperature ****

TCXO Configuration

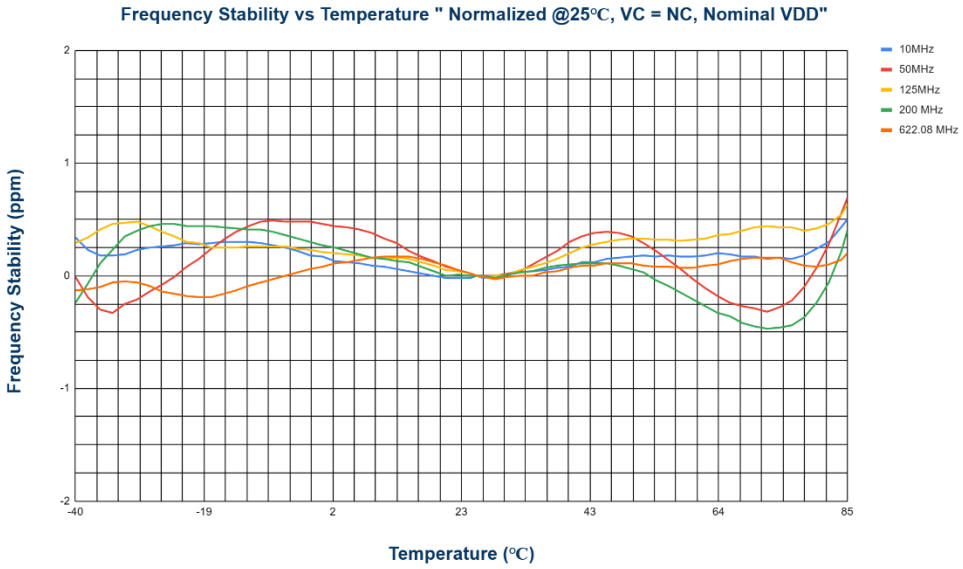

VCTCXO Configuration

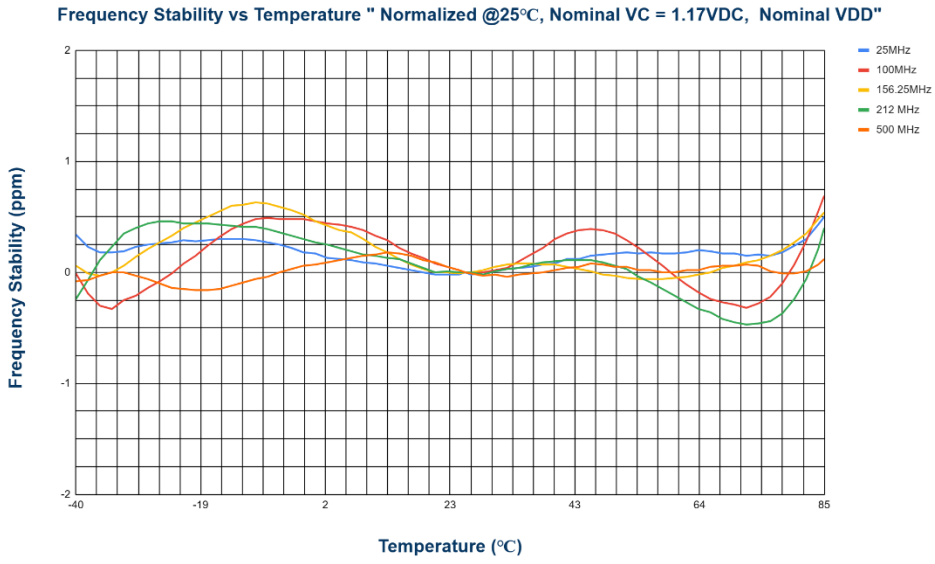

Notes

**** The following conditions are applicable to all output logic types.

Frequency Pull vs. Control Voltage (VCTCXO Configuration)

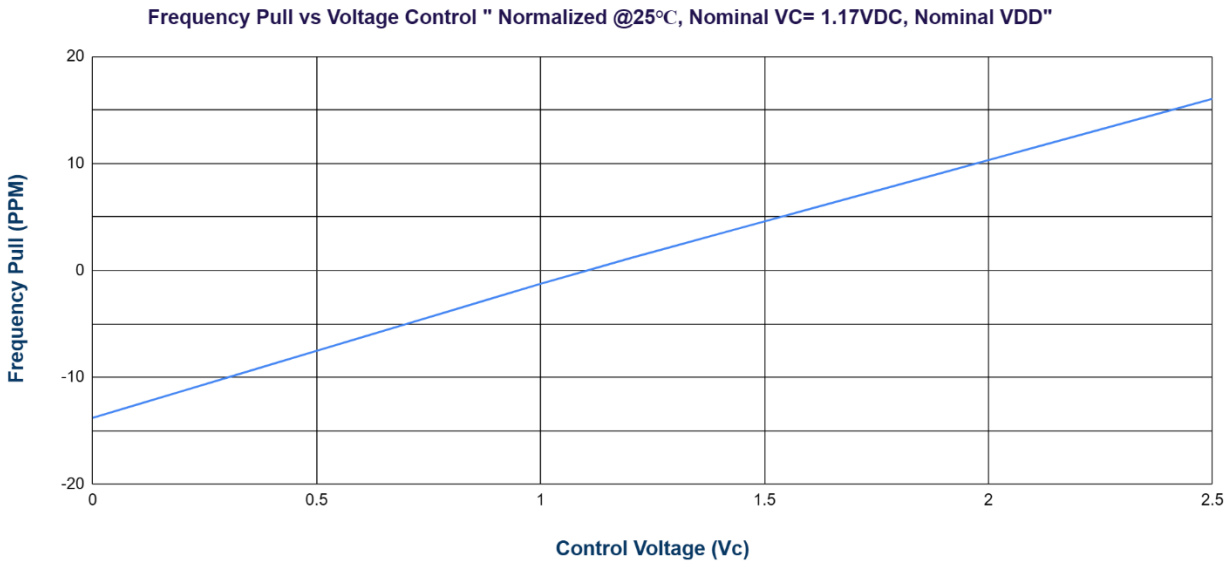

Mechanical Dimensions

LVCMOS output

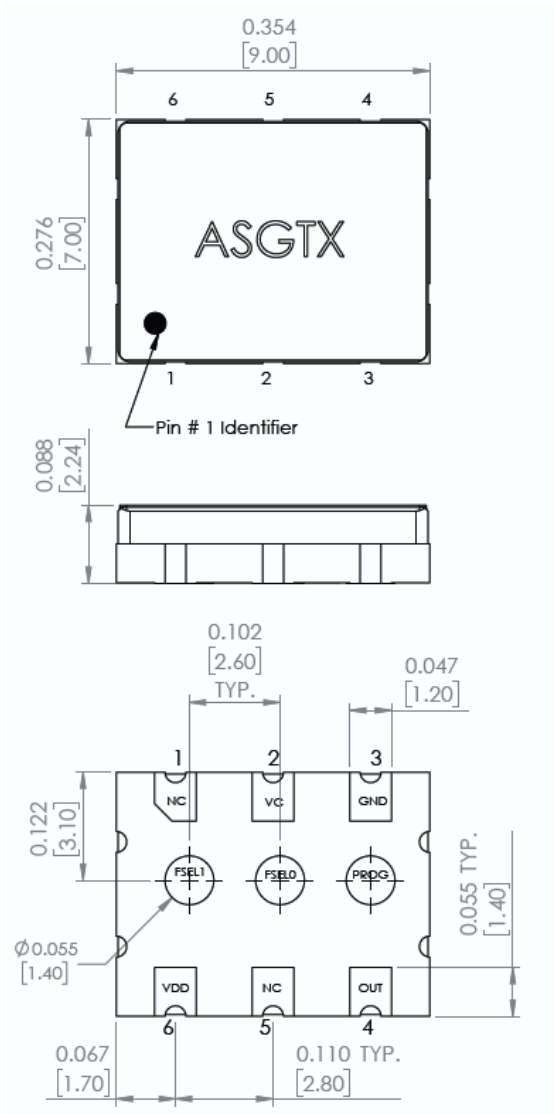

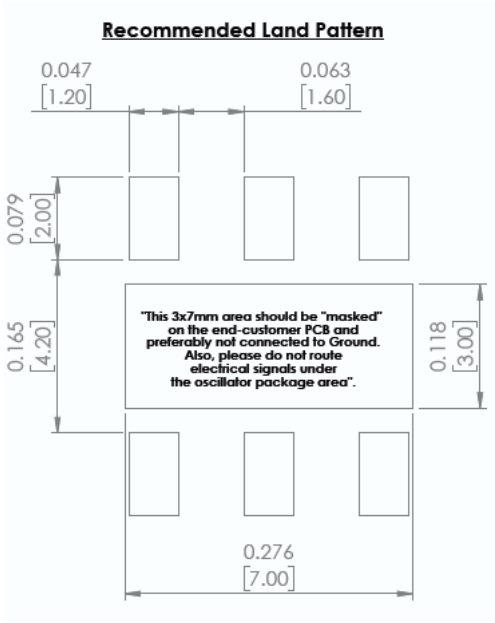

Pin #	Pin Description	
	TCXO	VCTCXO
1	N/C(1)	
2	By-Pass(2)	Vc(3)
3	GND	
4	RF Output	
5	N/C(1)	
6	Vdd	

N/C (1) = Please leave these pins electrically floating on the end-PCB

By-Pass (2) = In TCXO configuration, it is recommended that a 1,000pF COG by-pass capacitor is connected between Pin#2 and GND

Vc (3) = In VCTCXO configuration, please connect external voltage to pull the oscillator frequency

Note: Pads PROG, FSEL0 & FSEL1 are factory configuration pins. Do Not Connect.

Dimensions: inches (mm)

LVDS/LVPECL output

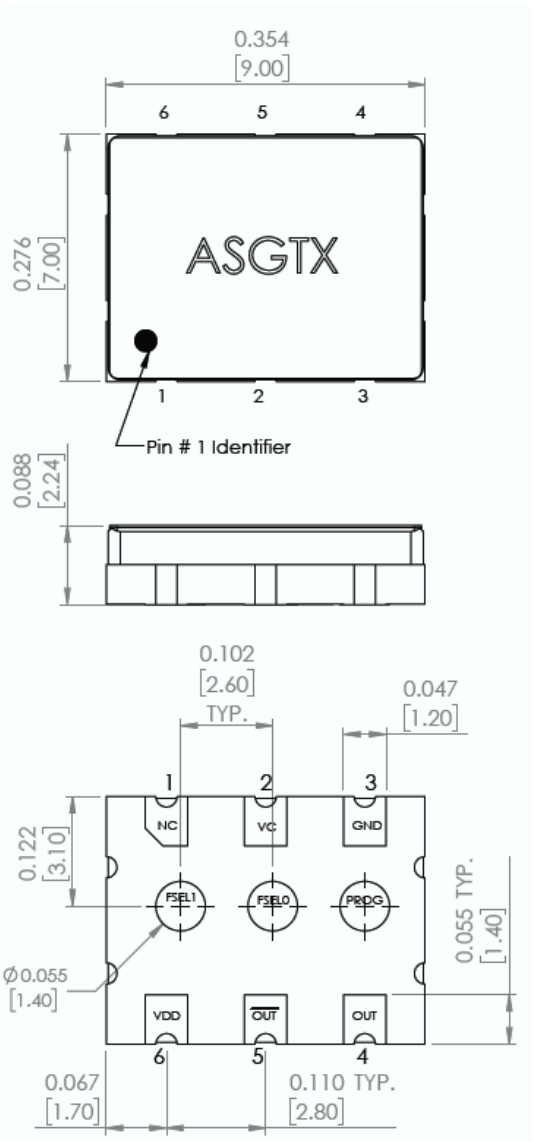

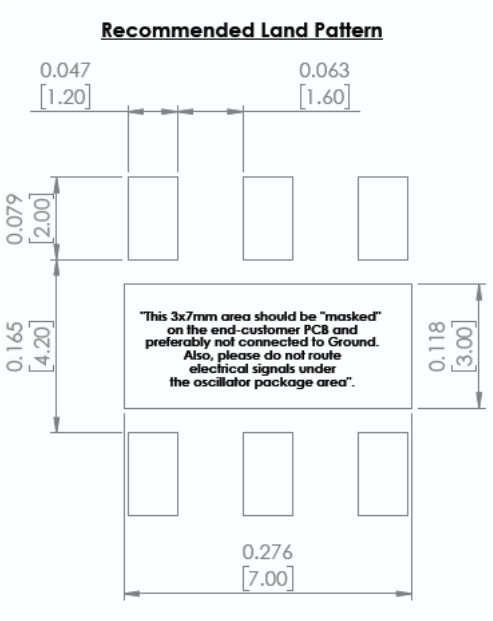

Pin #	Pin Description	
	TCXO	VCTCXO
1	N/C(1)	
2	By-Pass(2)	Vc(3)
3	GND	
4	RF Output	
5	Complimentary RF Output	
6	Vdd	

N/C (1)= Please leave these pins electrically floating on the end-PCB

By-Pass (2)= In TCXO configuration, it is recommended that a 1,000pF COG by-pass capacitor is connected between Pin#2 and GND

Vc (3) = In VCTCXO configuration, please connect external voltage to pull the oscillator frequency

Note: Pads PROG, FSEL0 & FSEL1 are factory configuration pins. Do Not Connect.

Dimensions: inches (mm)

Recommended Test Circuit

LVPECL

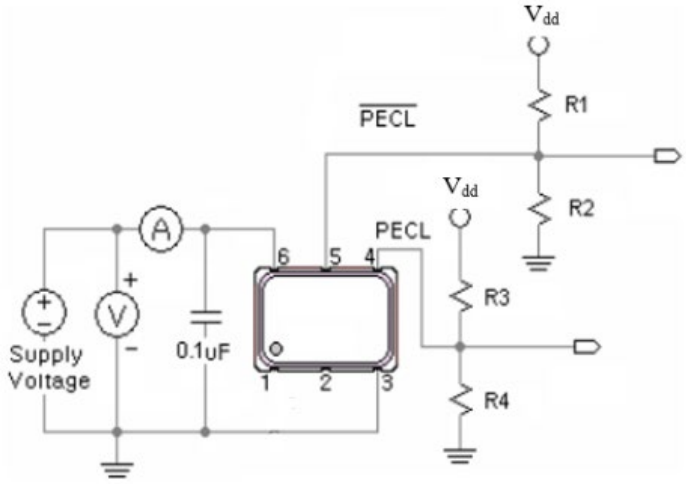

LVDS

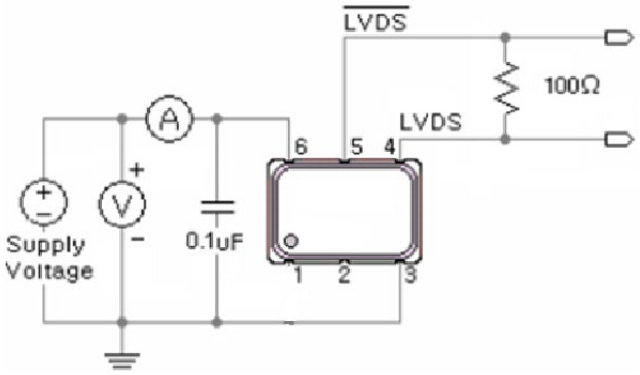

Vdd=3.3V: R1=R3=127Ω; R2=R4=82.5 Ω
Vdd=2.5V: R1=R3=250Ω; R2=R4=62.5 Ω

LVCMOS

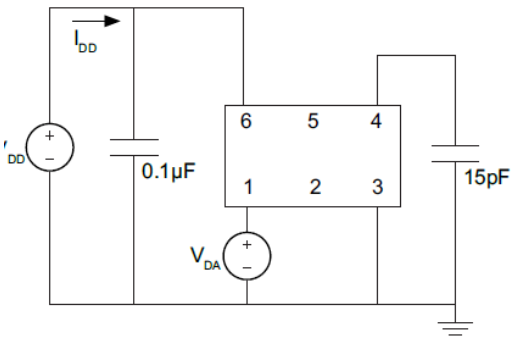

Reflow Profile [JEDEC J-STD-020]

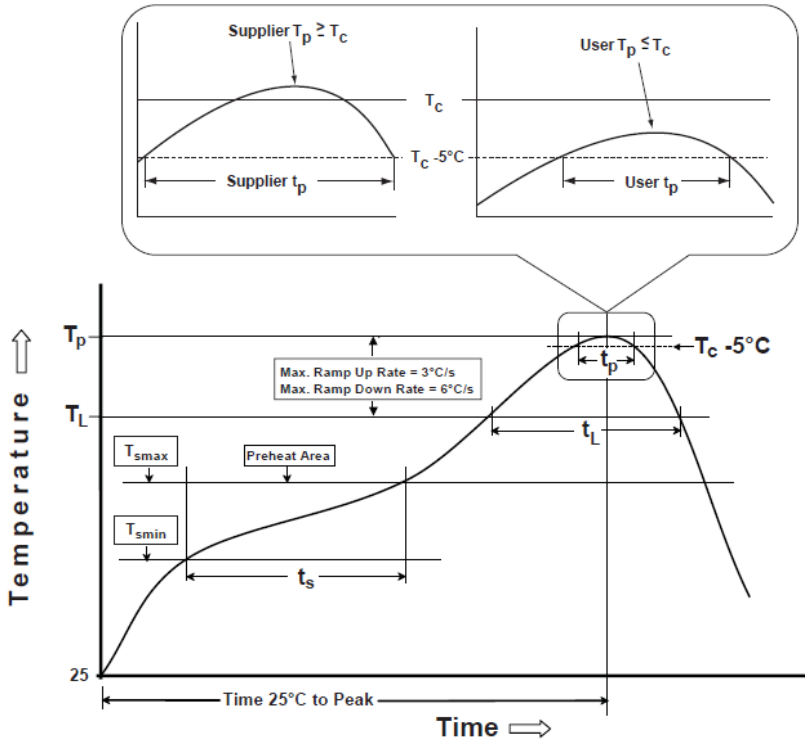

Table 1

SnPb Eutectic Process Classification Temperatures (T_c)		
Package Thickness	**Volume mm³ <350**	**Volume mm³ ≥350**
<2.5 mm	235 °C	220 °C
≥2.5 mm	220 °C	220 °C

Table 2

Pb-Free Process Classification Temperatures (T_c)			
Package Thickness	**Volume mm³ <350**	**Volume mm³ 350-2000**	**Volume mm³ >2000**
<1.6 mm	260 °C	260 °C	260 °C
1.6 mm - 2.5 mm	260 °C	250 °C	245 °C
>2.5 mm	250 °C	245 °C	245 °C

Profile Feature	Sn-Pb Eutectic Assembly	Pb-Free Assembly
Preheat / soak		
Temperature minimum (T_{smin})	100°C	150°C
Temperature maximum (T_{smax})	150°C	200°C
Time (T_{smin} to T_{smax}) (t_s)	60 - 120 sec.	60 - 120 sec.
Average ramp-up rate (T_{smax} to T_P)	3°C/sec. max	3°C/sec. max
Liquidous temperature (T_L)	183°C	217°C
Time at liquidous (t_L)	60 - 150 sec.	60 - 150 sec.
Peak package body temperature (T_P)*	**see Table 1**	**see Table 2**
Time (t_p)** within 5°C of the specified classification temperature (T_C)	20 sec.	30 sec.
Ramp-down rate (T_p to T_{smax})	6°C/sec. max	6°C/sec. max
Time 25°C to peak temperature	6 min. max	8 min. max
Reflow cycles	2 max	2 max

*Tolerance for peak profile temperature (T_P) is defined as a supplier minimum and a user maximum.

**Tolerance for time at peak profile temperature (t_p) is defined as supplier minimum and a user maximum.

Packaging

T2 = 250pcs/Reel

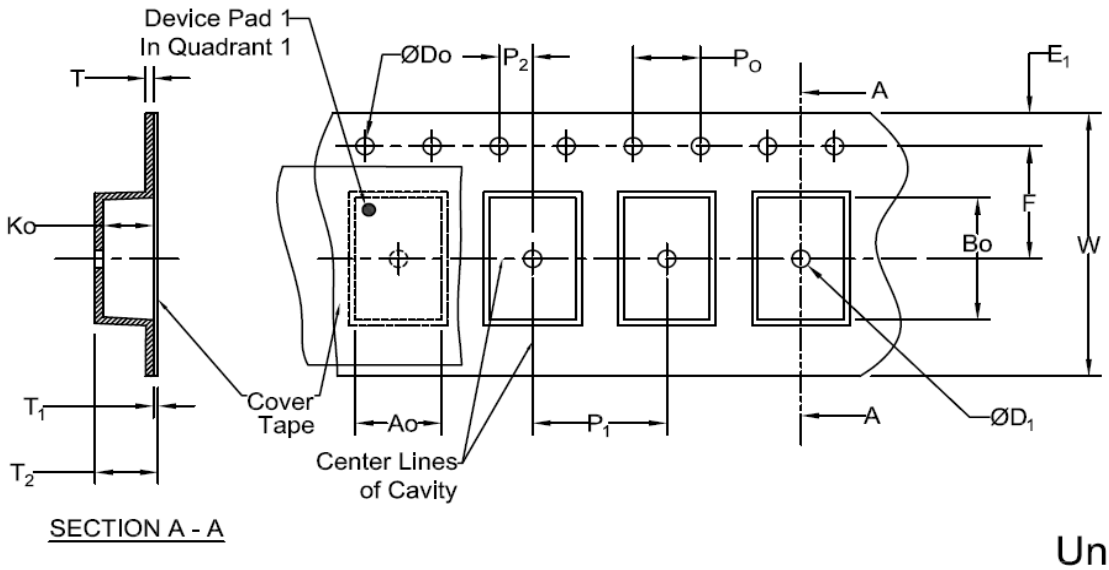

Unit: mm

Tape Specifications (mm)							
Width	Ao	Bo	Do	D_1 (Min)	E_1	F	Ko
16mm	*	*	1.5+0.1/-0.0	1.0	1.75±0.1	7.5±0.10	*

Tape Specifications (mm)							
Width	P_1	P_2	P_0	T (Max)	T_1 (Max)	T_2 (Max)	W (Max)
16mm	12.0±0.1	2.0±0.1	4.0±0.1	0.6	0.1	12.0	16.3

Dimensions: inches (mm)

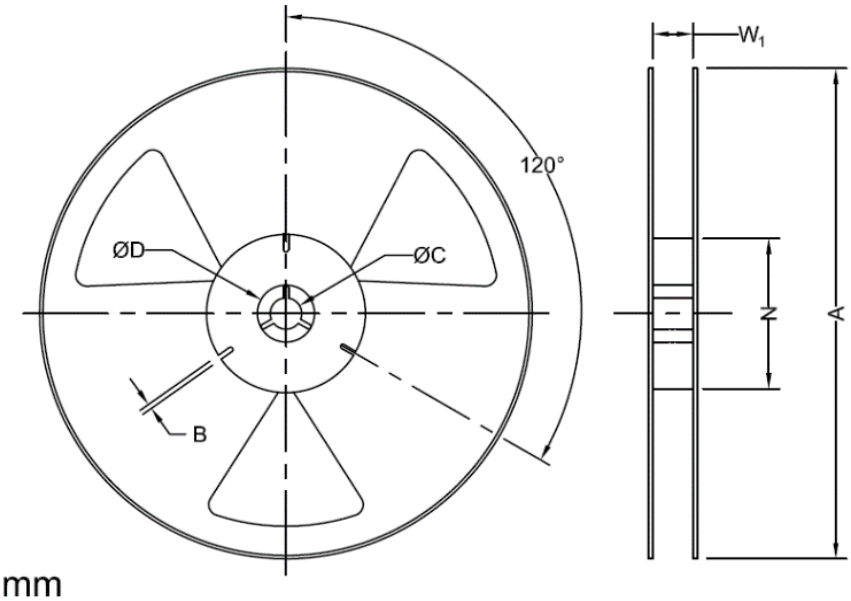

Unit: mm

Tape Specifications (mm)							
Width	Qty/Reel	A (Nom)	B (Min)	C (Min)	D (Min)	N (Min)	*W_1
16mm	250	330	1.5	13.0+0.5/-0.2	20.2	50	16.8+0.6/-0.4

Dimensions: inches (mm)