DATA CONTAINED IN THIS DOCUMENT IS PROPRIETARY TO TROMPETER ELECTRONICS INC. AND SHALL NOT BE DISCLOSED, COPIED OR USED FOR PROCUREMENT OR MANUFACTURE WITHOUT EXPRESS WRITTEN PERMISSION OF TROMPETER ELECTRONICS INC.

REVISIONS		PL1MWLT	
REV	DESCRIPTION	DATE	APP
A	PRODUCTION RELEASE		

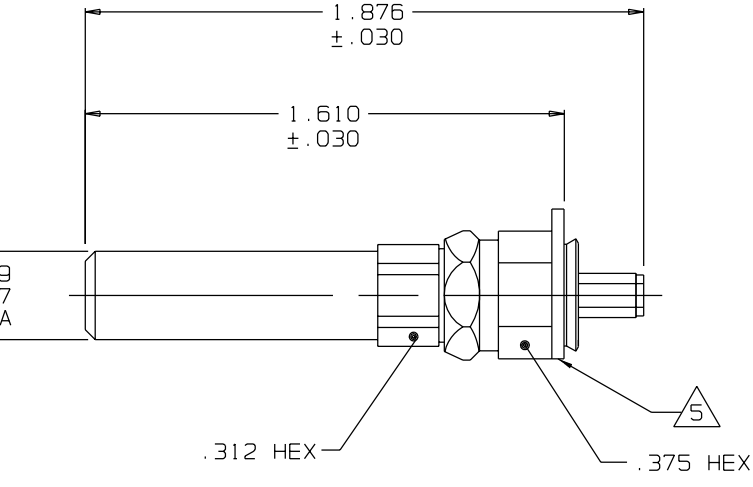

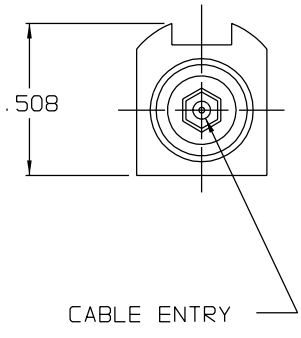

MODEL NO.	TEI P/N
PL1MWLT	1-0604

Y AFTER
FORCE OF
ON OF THE

EXCEPT
R CABLE
CONNECTOR

ACCOMODATED

TURE TOOL
STANDARD
NTRY BUSHING

OLD)

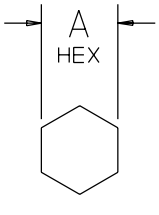

RECOMMENDED
HEX CRIMP

OUTLINE DRAWING

INTERPRET DRAWING PER MIL-STD-100
DIMENSIONS ARE IN INCHES AND INCLUDE FINISH THICKNESS UNLESS OTHERWISE SPECIFIED

TOL: UNLESS SPECIFIED
.XX ± .02
.XXX ± .010
.XXXX
ANGLES

DRAWN PD	DATE 1-10-02
CHECKED	
QUALITY	
MANUF	
APPROVED	
CAD FILE NO. PL1MWLT.PRT	

MATERIAL:

FINISH:

DO NOT SCALE DWG

NEXT ASSY

TROMPETER ELECTRONICS, IN

TITLE: 75 OHM PATCH PLUG, STANDARD CRIMP DESI

SIZE	CAGE CODE	DRAWING NO.
A	14949	PL1MWLT

SCALE	DATE:	SHEET
2/1		1